Administrative Site Review Application

Planning and Development Customer Service Center • One Exchange Plaza, Suite 400 | Raleigh, NC 27601 | 919-996-2500

Raleigh

This form is required when submitting site plans as referenced in Unified Development Ordinance (UDO) Section 10.2.8. Please check the appropriate building types and include the plan checklist document when submitting.

Office Use Only: Case #: _____ Planner (print): _____

Building Type		Site Transaction History
☐ Detached	☐ General	Subdivision case #: _____
☐ Attached	☐ Mixed use	Scoping/sketch plan case #: _____
☐ Apartment	☐ Open lot	Certificate of Appropriateness #: _____
☐ Townhouse	☐ Civic	Board of Adjustment #: _____
		Zoning Case #: TCZ-89-2022
		Administrative Alternate #: _____

GENERAL INFORMATION	
Development name: 5000 Louisburg Road	
Inside City limits? ☑ Yes ☐ No	
Property address(es): 5000 Louisburg Rd, 4801 Kyle Drive	
Site P.I.N.(s): 1726824803, 1726838187	
Please describe the scope of work. Include any additions, expansions, and change of use. The proposed development is a multi-family project consisting of approximately 400 units and structured parking including but not limited to all amenities and SCM measures.	
Current Property Owner/Developer Contact Name: Louisburg WEH LP/Eric Rifkin **NOTE: please attach purchase agreement when submitting this form.**	
Company: Louisburg WEH LP	Title: Assistant Vice President
Address: 56 Hunter Street, Suite 110 Apex, NC 27503	
Phone #: 919-387-1885	Email: hbginvoices@hallebuildinggroup.com
Applicant Name: Eric Rifkin	
Company: Louisburg WEH LP	Address: 56 Hunter Street, Suite 110 Apex, NC 27503
Phone #: 919-387-1885	Email: hbginvoices@hallebuildinggroup.com

DEVELOPMENT TYPE + SITE DATE TABLE (Applicable to all developments)	
SITE DATA	**BUILDING DATA**
Zoning district (if more than one, please provide the acreage of each): RX-7-CU	Existing gross floor area (not to be demolished): n/a
	Existing gross floor area to be demolished: n/a
Gross site acreage: 10.66	New gross floor area: 700,821
# of parking spaces required: 778 (max)	Total sf gross (to remain and new): 700,821
# of parking spaces proposed: 644	Proposed # of buildings: 1
Overlay District (if applicable):	Proposed # of stories for each: 6
Existing use (UDO 6.1.4): vacant	
Proposed use (UDO 6.1.4): Residential multi-unit living	

STORMWATER INFORMATION	
Existing Impervious Surface: Acres: 0 Square Feet: 0	Proposed Impervious Surface: Acres: 4.17 Square Feet: 205,167
Is this a flood hazard area? ☐ Yes ☑ No If yes, please provide: _____ Alluvial soils: _____ Flood study: _____ FEMA Map Panel #: _____	
Neuse River Buffer ☑ Yes ☐ No	Wetlands ☑ Yes ☐ No

RESIDENTIAL DEVELOPMENTS	
Total # of dwelling units: 400	Total # of hotel units:
# of bedroom units: 1br ☑ 275 2br ☑ 94 3br ☑ 31 4br or more ☐	
# of lots:	Is your project a cottage court? ☐ Yes ☐ No

SIGNATURE BLOCK	
I hereby designate Alden West to serve as my agent regarding this application, to receive and response to administrative comments, to resubmit plans on my behalf, and to represent me in any public meeting regarding this application. I/we have read, acknowledge, and affirm that this project is conforming to all application requirements applicable with the proposed development use. I acknowledge that this application is subject to the filing calendar and submittal policy, which states applications will expire after six consecutive months of inactivity.	
Signature:	Date: 2/9/2024
Printed Name: Alden West	

5000 LOUISBURG ROAD

5000 LOUISBURG ROAD
RALEIGH, NC

ADMINISTRATIVE SITE REVIEW

PROJECT NUMBER: HLE-23002

DATE: FEBRUARY 9, 2024

CITY OF RALEIGH CASE #: ASR-xxxx-2024
CITY OF RALEIGH ZONING CASE #: TCZ-89-2022

SITE DATA

SITE ADDRESS/PIN NUMBER		5000 LOUISBURG ROAD, RALEIGH, NORTH CAROLINA, 27616 / PIN# 1726824803, 1726838187
OWNER INFORMATION:		HALLE BUILDING GROUP 56 HUNTER STREET, SUITE 110 APEX, NC 27502 (919) 378-1885 hbginvoices@hallebuildinggroup.com
EXISTING ZONING:		RX-7-CU
OVERLAY DISTRICT:		N/A
WATER SUPPLY WATERSHED:		NEUSE
FLOODPLAIN/FIRM PANEL:		3720172600K DATED JULY 19, 2022
TOTAL AREA: PREVIOUS R/W DEDICATION AREA: PROPOSED R/W DEDICATION AREA: NET AREA:		10.66 AC (464,682 SF) 0.56 AC (24,508 SF) 0.20 AC (8,647 SF) 9.91 AC (431,527 SF)
EXISTING USE:		VACANT
PROPOSED USE:		APARTMENT (400 DWELLING UNITS)
BUILDING + PARKING SETBACK:	BUILD-TO	RX- PRIMARY STREET (MIN): 5' SIDE STREET (MIN): 5' SIDE LOT LINE (MIN): 0' OR 6' REAR LOT LINE (MIN): 0' OR 6' ALLEY: 4' OR 20' MIN
	PARKING SETBACK (PER UDO SECTION 3.2.4.B)	PRIMARY STREET: 10' (LOUISBURG RD - 10' PROVIDED) SECONDARY STREET: 10' (KYLE DRIVE - 10' PROVIDED) SIDE LOT LINE: 0' (0' PROVIDED) REAR LOT LINE: 0' (0' PROVIDED)
BUILDING HEIGHT: (PER UDO SECTION 3.3.2.A)	MAXIMUM ALLOWED:	RX- 6 STORIES (90')
	PROPOSED:	6 STORY BUILDING (54'-2")
BUILDING AREA		BUILDING AREA: 478,165 SF GARAGE AREA: 222,656 SF TOTAL GROSS AREA: 700,821 SF
TREE CONSERVATION		REQUIRED: 1.07 AC (10% NET SITE AREA) PROPOSED: 2.12 AC (20% NET SITE AREA)
IMPERVIOUS AREA		EXISTING : 0.00 AC. (0 SF) PROPOSED: 4.17 AC. (181,586 SF) DELTA: +4.17 AC. (181,586 SF)

1. PER UDO SECTION 8.3.2.A.1.b.ix, COMPLIANCE WITH MAXIMUM BLOCK PERIMETER STANDARDS SHALL NOT APPLY WHEN THE ADJACENT PROPERTY TO WHICH ANY STREET WOULD BE CONTINUED CONTAINS DETACHED BUILDING TYPE ON LOTS NO LARGER THAN 2 ACRES.
2. PER UDO TEXT CHANGE TC-6-20, SECTION DI ZONES B AND C DO NOT APPLY TO ATTACHED HOUSE, TOWNHOUSE OR APARTMENT BUILDING TYPES IN A MIXED-USE DISTRICT WHERE THE PROPOSED OR EXISTING BUILDING HEIGHT IS 50 FEET OR LESS, PROVIDED THE PROPOSED USE IS ALSO PERMITTED IN RX- AND ADHERES TO ANY APPLICABLE RX- AND UNDERLYING ZONING DISTRICT STANDARDS.

PARKING + BUILD-TO DATA

BUILDING BREAKDOWN:		400 TOTAL UNITS 275 - 1 BEDROOM UNITS 94 - 2 BEDROOM UNITS 31 - 3 BEDROOM UNITS CLUBHOUSE: 18,125 SF
PARKING DATA:	VEHICLE PARKING	REQUIRED: 778 TOTAL SPACES APARTMENTS: 718 TOTAL SPACES (1.5 SPACE/1 BEDROOM UNIT) X 275 UNITS = 413 SPACES (2.25 SPACE/2 BEDROOM UNIT) X 94 UNITS = 212 SPACES (3 SPACE/3 BEDROOM UNIT) X 93 UNITS = 93 SPACES CLUBHOUSE: 60 TOTAL SPACES (1 SPACE/300 SF) X 18,125 SF = 60 SPACES PROVIDED: PARKING DECK: 634 TOTAL SPACES (611 STANDARD SPACES + 18 ACCESSIBLE + 5 VAN ACCESSIBLE) SURFACE PARKING: 10 TOTAL SPACES (8 STANDARDS SPACES + 1 ACCESSIBLE + 1 VAN ACCESSIBLE)
	ACCESSIBLE PARKING	REQUIRED: 13 TOTAL ACCESSIBLE SPACES; 3 VAN SPACES PROVIDED: 19 TOTAL ACCESSIBLE SPACES; 6 VAN SPACES
	BIKE PARKING (SHORT-TERM)	REQUIRED: 24 TOTAL SPACES APARTMENTS: 20 TOTAL SPACES (1 SPACE/20 UNITS; 4 MIN) CLUBHOUSE: 4 TOTAL SPACES (1 SPACE/5,000 SF; 4 MIN.) PROVIDED: 24 SPACES (12 RACKS; 2 SPACES EACH RACK)
	BIKE PARKING	REQUIRED: 79 TOTAL SPACES APARTMENTS: 79 TOTAL SPACES (1 SPACE/ 7 BEDROOMS) CLUBHOUSE: NONE REQUIRED PROVIDED: 79 SPACES

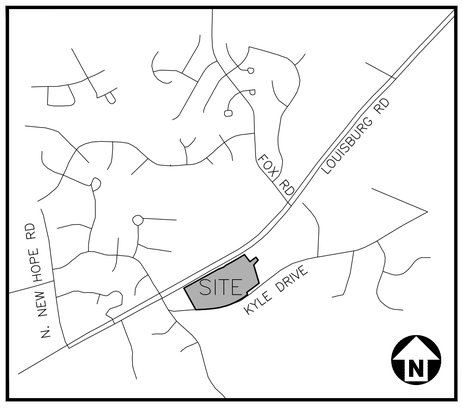

VICINITY MAP
1"=1000'

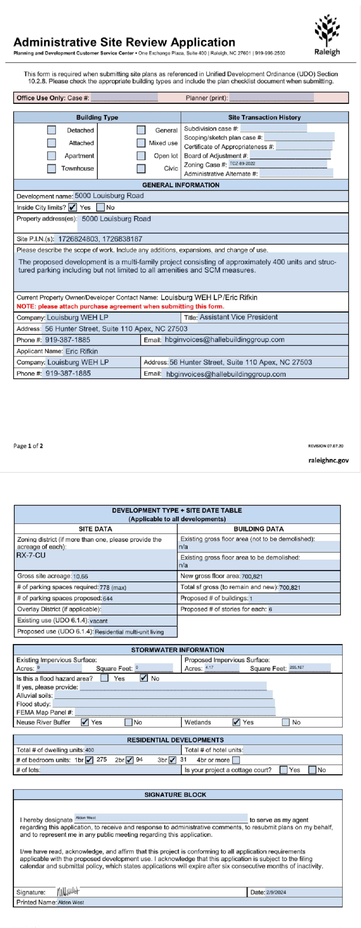

Administrative Site Review Application

Planning and Development Customer Service Center • One Exchange Plaza, Suite 400 | Raleigh, NC 27601 | 919-996-2500

Raleigh

This form is required when submitting site plans as referenced in Unified Development Ordinance (UDO) Section 10.2.8. Please check the appropriate building types and include the plan checklist document when submitting.

Office Use Only: Case #: Planner (print):

Building Type		Site Transaction History
☐ Detached	☐ General	Subdivision case #:
☐ Attached	☐ Mixed use	Scoping/sketch plan case #:
☐ Apartment	☐ Open lot	Certificate of Appropriateness #:
☐ Townhouse	☐ Civic	Board of Adjustment #:
		Zoning Case #: TCZ-89-2022
		Administrative Alternate #:

GENERAL INFORMATION

Development name: 5000 Louisburg Road

Inside City limits? ☑ Yes ☐ No

Property address(es): 5000 Louisburg Road

Site P.I.N.(s): 1726824803, 1726838187

Please describe the scope of work. Include any additions, expansions, and change of use.

The proposed development is a multi-family project consisting of approximately 400 units and structured parking including but not limited to all amenities and SCM measures.

Current Property Owner/Developer Contact Name: Louisburg WEH LP /Eric Rifkin

NOTE: please attach purchase agreement when submitting this form.

Company: Louisburg WEH LP Title: Assistant Vice President

Address: 56 Hunter Street, Suite 110 Apex, NC 27503

Phone #: 919-387-1885 Email: hbginvoices@hallebuildinggroup.com

Applicant Name: Eric Rifkin

Company: Louisburg WEH LP Address: 56 Hunter Street, Suite 110 Apex, NC 27503

Phone #: 919-387-1885 Email: hbginvoices@hallebuildinggroup.com

Page 1 of 2 REVISION 07.07.20 raleighnc.gov

DEVELOPMENT TYPE + SITE DATE TABLE
(Applicable to all developments)

SITE DATA	BUILDING DATA
Zoning district (if more than one, please provide the acreage of each): RX-7-CU	Existing gross floor area (not to be demolished): n/a
	Existing gross floor area to be demolished: n/a
Gross site acreage: 10.66	New gross floor area: 700,821
# of parking spaces required: 778 (max)	Total # gross (to remain and new): 700,821
# of parking spaces proposed: 644	Proposed # of buildings: 1
Overlay District (if applicable):	Proposed # of stories for each: 6
Existing use (UDO 6.1.4): vacant	
Proposed use (UDO 6.1.4): Residential multi-unit living	

STORMWATER INFORMATION

Existing Impervious Surface: Acres: 0 Square Feet: 0	Proposed Impervious Surface: Acres: 4.17 Square Feet: 181,587

Is this a flood hazard area? ☐ Yes ☑ No

If yes, please provide:

Alluvial soils:

Flood study:

FEMA Map Panel #:

Neuse River Buffer ☑ Yes ☐ No Wetlands ☑ Yes ☐ No

RESIDENTIAL DEVELOPMENTS

Total # of dwelling units: 400	Total # of hotel units:
# of bedroom units: 1br ☑ 275 2br ☑ 94 3br ☑ 31 4br or more ☐	
# of lofts:	Is your project a cottage court? ☐ Yes ☐ No

SIGNATURE BLOCK

I hereby designate Alexis West to serve as my agent regarding this application, to receive and response to administrative comments, to resubmit plans on my behalf, and to represent me in any public meeting regarding this application.

I/we have read, acknowledge, and affirm that this project is conforming to all application requirements applicable with the proposed development use. I acknowledge that this application is subject to the filing calendar and submittal policy, which states applications will expire after six consecutive months of inactivity.

Signature: Date: 2/9/2024

Printed Name: Alexis West

Page 2 of 2 REVISION 07.07.20 raleighnc.gov

ZONING CASE NO. TCZ-89-2022
DATE SUBMITTED: 11-14-2022; 3-13-2023
EXISTING ZONING:RX-7-CU
PROPOSED ZONING:RX-7-CU W/ CHANGED CONDITIONS

ZONING CONDITIONS

1. THE FOLLOWING USES SHALL BE PROHIBITED ON THE PROPERTY: ALL USES LISTED UNDER "COMMERCIAL" IN THE PRINCIPAL USE TABLE IN UDO SECTION 6.1.4, BOARDINGHOUSE, REST HOME, DORMITORY, FRATERNITY, SORORITY.

2. RESIDENTIAL USES SHALL BE LIMITED TO A MAXIMUM OF 400 UNITS.

3. BUILDING HEIGHT SHALL BE LIMITED TO A MAXIMUM OF SIX (6) STORIES AND NINETY (90) FEET.

4. WHERE PRIMARY TREE CONSERVATION AREA IS NOT REQUIRED, DEVELOPMENT SHALL INCLUDE A MINIMUM 25-FOOT WIDE PLANTED BUFFER MEASURED FROM THE RIGHT-OF-WAY OF LOUISBURG ROAD (THE "PROTECTIVE YARD"). THE PROTECTIVE YARD SHALL BE REQUIRED FOR THE LENGTH OF THE PROPERTY'S FRONTAGE ON LOUISBURG ROAD, EXCLUDING AREAS ENCUMBERED BY EASEMENTS OR DESIGNATED AS FLOODPLAIN OR FLOOD HAZARD SOILS. THE PROTECTIVE YARD SHALL INCLUDE A MINIMUM OF 4 SHADE TREES AND 15 SHRUBS PER 100 LINEAR FEET. PLANTINGS SHALL BE COUNTED TOWARD ANY UDO STREETSCAPE PLANTING REQUIREMENTS. EXISTING VEGETATION MAY BE USED TO MEET THE PLANTING REQUIREMENTS IN THIS CONDITION.

5. THE PROPERTY OWNER WILL DEDICATE NO LESS THAN THREE AND A HALF PERCENT (3.5%) OF THE TOTAL UNITS AS AFFORDABLE FOR A PERIOD OF NO LESS THAN TEN (10) YEARS STARTING FROM THE DATE OF ISSUANCE OF THE FIRST CERTIFICATE OF OCCUPANCY ON THE PROPERTY OR THE DATE DWELLING UNITS ARE SO DEDCATED, WHICHEVER IS LAST TO OCCUR (THE "AFFORDABLE PERIOD") FOR LOW-INCOME HOUSEHOLDS EARNING NO MORE THAN 80% OF THE AREA MEDIAN INCOME ("AMI"), ADJUSTED BY HOUSEHOLD SIZE, FOR THE RALEIGH, NC METROPOLITAN STATISTICAL AREA, AS DETERMINED AND PUBLISHED ANNUALLY BY THE U.S. DEPARTMENT OF HOUSING AND URBAN DEVELOPMENT. THE REQUIRED NUMBER AFFORDABLE UNITS SHALL BE ROUNDED UP TO THE NEXT WHOLE NUMBER. THE AFFORDABLE UNITS SHALL BE DEDICATED AS SUCH THAT AT NO TIME SHALL THE NUMBER OF AFFORDABLE UNITS BE LESS THAN 3.5% OF THE TOTAL NUMBER OF UNITS FOR WHICH A CERTIFICATE OF OCCUPANCY HAS BEEN ISSUED. NOTHING HEREIN SHALL PREVENT UNITS FROM BEING DESIGNATED AS AFFORDABLE UNITS IN GROUPS OR PHASES TO MATCH PHASED CONSTRUCTION PLANS. THE PROPERTY OWNER SHALL CERTIFY TO THE CITY COMPLIANCE WITH THIS ZONING CONDITION ON AN ANNUAL BASIS. PRIOR TO THE ISSUANCE OF THE FIRST RESIDENTIAL CERTIFICATE OF OCCUPANCY FOR THE PROPERTY, A RESTRICTIVE COVENANT BETWEEN THE CITY AND PROPERTY OWNER SHALL BE EXECUTED AND RECORDED IN THE WAKE COUNTY REGISTRY TO MEMORIALIZE THE AFFORDABLE HOUSING TERMS AND CONDITIONS (THE "COVENANTS"). IF THE DEVELOPMENT IS CONSTRUCTED IN MULTIPLE PHASES, EACH PHASE SHALL BE SUBJECT TO THE COVENANTS, AS INDICATED BY RECORDATION IN THE WAKE COUNTY REGISTRY, PRIOR TO ISSUANCE OF A CERTIFICATE OF OCCUPANCY FOR THAT PHASE. FOLLOWING EXPIRATION OF THE AFFORDABLE PERIOD, THIS AFFORDABLE HOUSING CONDITION SHALL EXPIRE AND THE AFFORDABLE UNITS MAY BE MARKETED AND LEASED AT MARKET-RATE RENTS; HOWEVER, THE PROPERTY OWNER SHALL PROVIDE TENANTS OF ANY SUCH AFFORDABLE UNITS WITH 60 DAYS' WRITTEN NOTICE BEFORE TERMINATION OF THEIR TENANCY OR OF ANY INCREASED RENT TO MARKET RATES; AND THE PROPERTY OWNER, OR THEIR DESIGNEE, SHALL PROVIDE THE HOUSING AND NEIGHBORHOODS STAFF WITH AN AFFIDAVIT CONFIRMING THAT THE 60-DAY NOTICE OF LEASE TERMINATION OR RENT INCREASE WAS PROPERLY SERVED. A RENT ROLL AND SAMPLE COPY OF THE NOTIFICATION LETTER SHALL BE ATTACHED TO AND REFERENCED IN THE AFFIDAVITS.

6. DEVELOPMENT OF THE PROPERTY SHALL INCLUDE CONSTRUCTION OF A MULTI-USE PATH CONSTRUCTED OF ASPHALT AND BUILT TO CITY OF RALEIGH GREENWAY STANDARDS (THE "GREENWAY"). THE GREENWAY SHALL BE CONSTRUCTED PRIOR TO ISSUANCE OF A CERTIFICATE OF OCCUPANCY FOR THE 200TH APARTMENT UNIT, BE APPROXIMATELY 400 LINEAR FEET IN LENGTH, CONNECT TO THE DEVELOPMENT'S INTERNAL SIDEWALKS, AND BE CONSTRUCTED IN THE GENERAL LOCATION SHOWN IN EXHIBIT A. GREENWAY WIDTH AND ALIGNMENT MAY VARY TO ACCOMMODATE TOPOGRAPHICAL AND OTHER NATURAL FEATURES OF THE PROPERTY, BUT WILL, IN ALL LOCATIONS, MEET THE RALEIGH REENWAY MINIMUM STANDARDS. THE GREENWAY SHALL BE LOCATED WITHIN A PUBLICLY ACCESSIBLE BICYCLE AND PEDESTRIAN ACCESS EASEMENT WITH A MINIMUM WIDTH OF 20 FEET (THE "EASEMENT"). UTILITY CROSSINGS SHALL BE PERMITTED WITHIN THE EASEMENT AND THE PROPERTY OWNER MAY UTILIZE THE EASEMENT TO ACCESS THE STORMWATER POND FOR MAINTENANCE PURPOSES, PROVIDED THE OWNER DOES NOT CONSTRUCT ANY GATES, WALLS, BARRIERS OR OTHER SUCH OBSTRUCTIONS WITHIN THE EASEMENT THAT PROHIBIT BICYCLE AND PEDESTRIAN ACCESS.

SOLID WASTE COMPLIANCE STATEMENT:

1. THE DEVELOPER ACKNOWLEDGES THAT THEY HAVE REVIEWED AND ARE IN COMPLIANCE WITH THE REQUIREMENTS SET FORTH IN THE SOLID WASTE DESIGN MANUAL.
2. THE SOLID WASTE REMOVAL FOR THIS PROJECT WILL BE HANDLED BY A PRIVATE SERVICE.
3. REFUSE WILL BE COLLECTED IN THE WASTE REFUGE AREA WITHIN THE PARKING DECK WITH CURB SIDE PICKUP. PICKUP WILL BE PROVIDED TWICE A WEEK.

Know what's below. Call before you dig.

CONTRACTOR SHALL NOTIFY "NC811" (811) OR (1-800-632-4949) AT LEAST 3 FULL BUSINESS DAYS PRIOR TO BEGINNING CONSTRUCTION OR EXCAVATION TO HAVE EXISTING UTILITIES LOCATED. CONTRACTOR SHALL CONTACT ANY LOCAL UTILITIES THAT PROVIDE THEIR OWN LOCATOR SERVICES INDEPENDENT OF "NC811". REPORT ANY DISCREPANCIES TO THE ENGINEER IMMEDIATELY.

ATTENTION CONTRACTORS

The **Construction Contractor** responsible for the extension of water, sewer, and/or reuse, as approved in these plans, is responsible for contacting the **Public Works Department** at **(919) 996-2409**, and the **Public Utilities Department** at **(919) 996-4540** at least **twenty four hours** prior to beginning any of their construction.

Failure to notify both **City Departments** in advance of beginning construction, will result in the issuance of **monetary fines**, and require reinstallation of any water or sewer facilities not inspected as a result of this notification failure.

Failure to call for **Inspection, Install a Downstream Plug**, have **Permitted Plans** on the **Jobsite**, or any other **Violation** of **City of Raleigh Standards** will result in a **Fine and Possible Exclusion** from future work in the **City of Raleigh.**

CITY OF RALEIGH – PLANS AUTHORIZED FOR CONSTRUCTION

Plans for the proposed use have been reviewed for general compliance with applicable codes. This limited review, and authorization for construction is not to be considered to represent total compliance with all legal requirements for development and construction. The property owner, design consultants, and contractors are each responsible for compliance with all applicable City, State and Federal laws. This specific authorization below is not a permit, nor shall it be construed to permit any violation of City, State or Federal Law. All Construction must be in accordance with all Local, State, and Federal Rules and Regulations.

Electronic Approval: This approval is being issued electronically. This approval is valid only upon the signature of a City of Raleigh Review Officer below. The City will retain a copy of the approved plans. Any work authorized by this approval must proceed in accordance with the plans kept on file with the City. This electronic approval may not be edited once issued. Any modification to this approval once issued will invalidate this approval.

City of Raleigh Development Approval _____
City of Raleigh Review Officer

CERTAIN ITEMS WITHIN THESE PLANS HAVE BEEN PRODUCED IN COLOR FOR CLARITY OF THE PLANS. THESE PLANS MUST BE PLOTTED IN COLOR TO BE VALID.

ALL CONSTRUCTION SHALL BE IN ACCORDANCE WITH THE CURRENT CITY OF RALEIGH AND NCDOT (WHERE APPLICABLE) ENGINEERING DESIGN AND CONSTRUCTION STANDARDS

SHEET INDEX

C0.00	PROJECT NOTES
C1.00	EXISTING CONDITIONS
C1.01	DEMOLITION PLAN
C2.00	SITE PLAN
C3.00	GRADING AND STORM DRAINAGE PLAN
C4.00	UTILITY PLAN
C7.00	LIGHTING PLAN
C8.00	SITE DETAILS
C8.01	SITE DETAILS
C8.02	WATER DETAILS
C8.03	STORM DRAINAGE DETAILS
C8.04	SANITARY SEWER DETAILS
L5.00	LANDSCAPE PLAN
L5.01	LANDSCAPE NOTES AND DETAILS
L5.10	TREE CONSERVATION PLAN
L5.11	TREE CONSERVATION PLAN ENLARGEMENT
C9.00	STORMWATER CONTROL MEASURE "A" PLAN VIEW
C9.01	STORMWATER CONTROL MEASURE "A" DETAILS
C9.02	STORMWATER CONTROL MEASURE "A" DETAILS

ARCHITECTURAL SHEETS

BUILDING SECTIONS
LOWER LEVEL PLAN
LEVEL 1 PLAN
LEVEL 2 PLAN
LEVEL 3 & 4 PLAN
LEVEL 5 PLAN
LEVEL 6 PLAN
BUILDING ELEVATIONS
BUILDING ELEVATIONS

McADAMS
The John R. McAdams Company, Inc.
2905 Meridian Parkway
Durham, NC 27713

phone 919. 361. 5000
fax 919. 361. 2269
license number: C-0293, C-187

www.mcadamsco.com

CONTACT

ALDEN WEST
west@mcadamsco.com
PHONE: 919. 361. 5000

CLIENT

HALLE BUILDING GROUP
56 HUNTER STREET, STE. 110
APEX, NC 27502
ERIC RIFKIN
PHONE: 919. 387. 1885

Halle BUILDING GROUP

PROJECT DIRECTORY

REVISIONS

NO.	DATE
1	
2	
3	
4	
5	
6	

ADMINISTRATIVE SITE REVIEW FOR:
5000 LOUISBURG ROAD

5000 LOUISBURG ROAD
RALEIGH, NC
PROJECT NUMBER: HLE-23002

PRELIMINARY DRAWING - NOT RELEASED FOR CONSTRUCTION

M:\Projects\HLE\HLE23002\04-Production\Engineering\Production Drawings\Current Drawings\Administrative Site Review\HLE23002-ASR-C01.dwg, 2/9/2024 5:00:14 PM, Savana Bennett

SITE PLAN NOTES

1. NON-ALLEY LOADED DRIVEWAYS MAY INTERSECT A STREET NO CLOSER THAN 20 FEET FROM THE INTERSECTION OF TWO STREET RIGHT-OF-WAYS. THE MINIMUM CORNER CLEARANCE FROM CURB LINE OR EDGE OF PAVEMENT OF INTERSECTING STREETS SHALL BE AT LEAST 20 FEET FROM THE POINT OF TANGENCY OF THE RADIUS OF CURVATURE, OR 20 FEET FROM THE INTERSECTION OF RIGHT-OF-WAY LINES, WHICH EVER IS GREATER. THE RADIUS OF THE DRIVEWAY SHALL NOT ENCROACH ON THE MINIMUM CORNER CLEARANCE. REFER TO SECTION 6.5 OF THE LATEST VERSION OF THE RALEIGH STREET DESIGN MANUAL FOR ADDITIONAL DETAILS.
2. RIGHT-OF-WAY SHALL BE CLEARED AND GRUBBED WITHIN 50' OF ALL MINOR RESIDENTIAL, RESIDENTIAL, AND RESIDENTIAL COLLECTOR INTERSECTIONS. THE FULL LENGTH OF THE RIGHT-OF-WAY SHALL BE CLEARED AND GRADED ALONG ALL MAJOR, MINOR, & SENSITIVE AREA THOROUGHFARES.
3. WITHIN THE AREA DEFINED SIGHT TRIANGLES SHOWN ON THESE PLANS, THERE SHALL BE NO SIGHT OBSTRUCTING OR PARTLY OBSTRUCTING WALL, FENCE, SIGN, FOLIAGE BERMS, OR PARKED VEHICLES BETWEEN THE HEIGHTS OF 24 INCHES AND 8 FEET ABOVE THE CURB LINE ELEVATION OR THE NEAREST TRAVEL WAY IF NO CURB LINE EXISTS. REFER TO SECTION 6.12 OF THE LATEST VERSION OF THE RALEIGH STREET DESIGN MANUAL FOR ADDITIONAL DETAILS.
4. MULTIWAY STOP CONTROL WILL NOT BE USED AT ANY PUBLIC STREET INTERSECTION WITHOUT AN ENGINEERING STUDY TO PROVIDE DATA TO CITY OF RALEIGH TRANSPORTATION DIVISION THAT THE MULTIWAY STOP INSTALLATION WARRANTS CAN BE MET AND ORDINANCED BY CITY COUNCIL APPROVAL.
5. ALL CONSTRUCTION SHALL CONFORM TO THE LATEST CITY OF RALEIGH AND/OR NCDOT STANDARDS AND SPECIFICATIONS AS APPLICABLE.
6. ALL DIMENSIONS SHOWN ON SITE PLAN ARE MEASURED TO FACE OF CURB UNLESS OTHERWISE NOTED.
7. CONTRACTOR SHALL MAINTAIN AN "AS-BUILT" SET OF DRAWINGS TO RECORD THE EXACT LOCATION OF ALL PIPING PRIOR TO CONCEALMENT. DRAWINGS SHALL BE GIVEN TO THE ENGINEER UPON COMPLETION OF THE PROJECT WITH A COPY OF THE TRANSMITTAL LETTER TO THE OWNER.
8. EXISTING IMPROVEMENTS DAMAGED DURING CONSTRUCTION SHALL BE REPLACED/RESTORED TO THEIR ORIGINAL CONDITION AND TO THE SATISFACTION OF THE OWNER, BY THE CONTRACTOR RESPONSIBLE FOR THE DAMAGE.
9. THE CONTRACTOR SHALL NOTE THAT THE DRAWINGS MAY NOT SHOW EVERY OFFSET, TRANSITION, FITTING, ETC. THAT MAY BE REQUIRED. THE CONTRACTOR SHALL INSTALL SUCH STANDARD APPURTENANCES AS REQUIRED TO CLOSELY FOLLOW THE GRADES AND ALIGNMENTS DEPICTED ON THE PLANS.
10. CONTRACTOR SHALL NOTIFY "NC811" (811) OR (1-800-632-4949) AT LEAST 3 FULL BUSINESS DAYS PRIOR TO BEGINNING CONSTRUCTION OR EXCAVATION TO HAVE EXISTING UTILITIES LOCATED. CONTRACTOR SHALL CONTACT ANY LOCAL UTILITIES THAT PROVIDE THEIR OWN LOCATOR SERVICES INDEPENDENT OF "NC811". REPORT ANY DISCREPANCIES TO THE ENGINEER IMMEDIATELY.
11. CONTRACTOR IS RESPONSIBLE FOR COORDINATING CONSTRUCTION ACTIVITIES WITH THE APPROPRIATE UTILITY COMPANIES FOR ANY REQUIRED RELOCATIONS (I.E. POWER POLES, TELEPHONE PEDESTALS, WATER METERS, ETC.).
12. PRIOR TO BEGINNING CONSTRUCTION BEYOND EROSION CONTROL MEASURES, THE GENERAL CONTRACTOR SHALL SCHEDULE AND ATTEND A PRE-CONSTRUCTION CONFERENCE WITH THE CITY OF RALEIGH PUBLIC WORKS DEPARTMENT (919) 996-2409, AND A REPRESENTATIVE OF THE ENGINEER AND OWNER. THE PURPOSE OF THIS MEETING IS TO REVIEW THE SPECIFIC COMPONENTS OF THE PLAN AND OPERATION OF THE FACILITIES DURING CONSTRUCTION.
13. ALL DIMENSIONS AND GRADES SHOWN ON THE PLANS SHALL BE FIELD VERIFIED BY THE CONTRACTOR PRIOR TO CONSTRUCTION. CONTRACTOR SHALL NOTIFY THE ENGINEER IF ANY DISCREPANCIES EXIST PRIOR TO PROCEEDING WITH CONSTRUCTION, FOR NECESSARY PLAN OR GRADE CHANGES. NO EXTRA COMPENSATION SHALL BE PAID TO THE CONTRACTOR FOR ANY WORK DONE DUE TO DIMENSIONS OR GRADES SHOWN INCORRECTLY ON THESE PLANS IF SUCH NOTIFICATION HAS NOT BEEN GIVEN.
14. ACCESSIBLE RAMPS SHALL BE CONSTRUCTED IN ACCORDANCE WITH THE CITY OF RALEIGH UNIFIED DEVELOPMENT ORDINANCE (UDO) DETAILS.
15. ALL SIDEWALKS THAT CONNECT TO THE PUBLIC RIGHT-OF-WAY MUST BE ACCESSIBLE TO PERSONS WHO ARE BLIND, HAVE LOW VISION AND PEOPLE WITH MOBILITY DISABILITIES. PEDESTRIAN EXISTING ROUTES AND ALTERNATE PEDESTRIAN ROUTES DURING CONSTRUCTION WILL BE REQUIRED TO BE COMPLIANT WITH THE PUBLIC RIGHTS OF WAY ACCESSIBILITY GUIDELINES (PROWAG), 2010 ADA STANDARDS FOR ACCESSIBLE DESIGN AND THE MANUAL ON UNIFORM TRAFFIC CONTROL DEVICES (MUTCD).
16. TYPICAL PAVEMENT SECTION DETAILS ARE SHOWN WITHIN THIS SET AND INTENDED TO BE A MINIMUM PAVEMENT SECTION REQUIREMENT. THE CURRENT GEOTECHNICAL REPORT SHALL OVER-RIDE ALL TYPICAL PAVEMENT SECTIONS SHOWN, IF THE GEOTECHNICAL ENGINEER DEEMS A HEAVIER SECTION IS REQUIRED.
17. EQUIPMENT AND PRODUCTS OTHER THAN THOSE SPECIFIED MAY BE USED PROVIDED APPROVAL HAS BEEN OBTAINED FROM THE OWNER IN WRITING PRIOR TO ORDERING OR INSTALLATION. THE CONTRACTOR SHALL WAIVE ANY CLAIM FOR ADDITIONAL COST RELATED TO SUBSTITUTION OF ALTERNATE EQUIPMENT.
18. IF UNFORESEEN CONDITIONS DEVELOP DURING CONSTRUCTION, REFER TO THE LATEST VERSION OF THE RALEIGH STREET DESIGN MANUAL AND CONTACT PUBLIC WORKS STAFF FOR FURTHER GUIDANCE.
19. ALL SIGNAGE ASSOCIATED WITH THE PUBLIC STREET SYSTEM SHALL ADHERE TO MUTCD STANDARDS AND SPECIFICATIONS.
20. ANY TRANSIT STOP LOCATIONS SHOWN ARE PRELIMINARY ONLY. FINAL LOCATION SHALL BE DETERMINED ONCE THE CITY OF RALEIGH TRANSIT ROUTE HAS BEEN FINALIZED. ALL TRANSIT STOPS SHALL HAVE A 10'x20'x6" (3000 PSI) CONCRETE PAD.

RETAINING WALL NOTES

1. THE RETAINING WALL ALIGNMENT SHOWN ON THESE PLANS DEPICTS THE LOCATION OF THE FRONT FACE OF THE RETAINING WALL AT THE TOP OF THE WALL. THE CONTRACTOR IS RESPONSIBLE FOR ENSURING RETAINING WALLS ARE NOT LOCATED IN ANY STREAM BUFFERS, AND THEIR CONSTRUCTION DOES NOT ENCROACH INTO ANY ADJACENT PROPERTIES DUE TO ANY BATTER INCORPORATED IN THE DESIGN OF THE WALLS.
2. RETAINING WALLS ARE TO BE DESIGN-BUILD PROJECTS BY THE CONTRACTOR. IT SHALL BE THE CONTRACTOR'S RESPONSIBILITY TO OBTAIN FINAL CONSTRUCTION DRAWINGS FROM A REGISTERED ENGINEER AND GAIN ALL REQUIRED PERMITS NECESSARY FOR THE CONSTRUCTION OF THE RETAINING WALLS.
3. RETAINING WALLS SHALL BE ASSUMED TO BE BACKFILLED WITH OFF-SITE BORROW MATERIAL OR PROCESSED FILL, UNLESS THE CONTRACTOR CAN PROVIDE TO THE OWNER WITH CONFIRMATION FROM THE GEOTECHNICAL ENGINEER AND THE RETAINING WALL DESIGNER, THAT READILY AVAILABLE ON-SITE SOILS CAN BE USED.
4. THE TOP AND BOTTOM OF WALL ELEVATIONS SHOWN ON THESE PLANS IDENTIFY FINISHED GRADE ELEVATIONS ONLY. THE EXTENT THAT THE RETAINING WALL WILL BE EXTENDED BELOW GRADE TO THE FOOTING OR ABOVE GRADE TO THE TOP OF THE CAP BLOCK COURSE SHALL BE IDENTIFIED ON THE RETAINING WALL CONSTRUCTION DRAWINGS.
5. ALL RETAINING WALLS OVER 30" HIGH SHALL HAVE A SAFETY FENCE (DESIGN BY OTHERS).
6. ANY PART OF ANY RETAINING WALL THAT EXTENDS INTO THE RIGHT-OF-WAY WILL REQUIRE AN ENCROACHMENT AGREEMENT. ENCROACHMENT AGREEMENTS FOR RETAINING WALLS SHALL BE APPROVED PRIOR TO CONSTRUCTION DRAWING APPROVAL.
7. ANY TIEBACK SYSTEMS FOR THE RETAINING WALLS SHALL NOT BE ALLOWED WITHIN PUBLIC RIGHT-OF-WAY.
8. STORMWATER RUN-OFF SHALL BE DIRECTED AWAY FROM RETAINING WALLS. ANY RUN-OFF FLOWING TO AND OVER A RETAINING WALL SHALL BE KEPT TO AN ABSOLUTE MINIMUM AND BROUGHT TO THE ATTENTION OF THE WALL DESIGNER PRIOR TO THEIR DESIGN.

GRADING NOTES

1. ALL DIMENSIONS AND GRADES SHOWN ON THE PLANS SHALL BE FIELD VERIFIED BY THE CONTRACTOR PRIOR TO CONSTRUCTION. CONTRACTOR SHALL NOTIFY THE ENGINEER IF ANY DISCREPANCIES EXIST PRIOR TO PROCEEDING WITH CONSTRUCTION, FOR NECESSARY PLAN OR GRADE CHANGES. NO EXTRA COMPENSATION SHALL BE PAID TO THE CONTRACTOR FOR ANY WORK DONE DUE TO DIMENSIONS OR GRADES SHOWN INCORRECTLY ON THESE PLANS IF SUCH NOTIFICATION HAS NOT BEEN GIVEN.
2. OCCUPATIONAL SAFETY AND HEALTH ADMINISTRATION (OSHA) STANDARDS FOR EXCAVATIONS; FINAL RULE 29CFR PART 1926, SUBPART "P" APPLIES TO ALL EXCAVATIONS EXCEEDING FIVE (5) FEET IN DEPTH. EXCAVATION EXCEEDING TWENTY (20) FEET IN DEPTH REQUIRES THE DESIGN OF A TRENCH SAFETY SYSTEM BY A REGISTERED PROFESSIONAL ENGINEER, PROVIDED BY CONTRACTOR RESPONSIBLE FOR EXCAVATION.
3. ALL CONSTRUCTION SHALL BE IN ACCORDANCE WITH THE CITY OF RALEIGH AND/OR NCDOT STANDARDS AND SPECIFICATIONS AS APPLICABLE.
4. CONTRACTOR SHALL NOTIFY "NC811" (811) OR (1-800-632-4949) AT LEAST 3 FULL BUSINESS DAYS PRIOR TO BEGINNING CONSTRUCTION OR EXCAVATION TO HAVE EXISTING UTILITIES LOCATED. CONTRACTOR SHALL CONTACT ANY LOCAL UTILITIES THAT PROVIDE THEIR OWN LOCATOR SERVICES INDEPENDENT OF "NC811". REPORT ANY DISCREPANCIES TO THE ENGINEER IMMEDIATELY.
5. PRIOR TO BEGINNING CONSTRUCTION, THE GENERAL CONTRACTOR SHALL SCHEDULE AND ATTEND A PRE-CONSTRUCTION CONFERENCE WITH THE CITY OF RALEIGH STORMWATER AND EROSION CONTROL DEPARTMENT, THE ENGINEER AND A REPRESENTATIVE OF THE OWNER.
6. CONSTRUCTION, MAINTENANCE AND REMOVAL OF ALL EROSION CONTROL DEVICES ARE THE RESPONSIBILITY OF THE GENERAL CONTRACTOR. TIMING OF REMOVAL SHALL BE COORDINATED WITH THE EROSION CONTROL INSPECTOR.
7. EXISTING UTILITIES AND STRUCTURES SHOWN, BOTH UNDERGROUND AND ABOVE GROUND, ARE BASED ON A FIELD SURVEY AND THE BEST AVAILABLE RECORD DRAWINGS. THE CONTRACTOR SHALL VERIFY FIELD CONDITIONS PRIOR TO BEGINNING RELATED CONSTRUCTION. ANY DISCREPANCIES SHALL BE REPORTED TO THE ENGINEER IMMEDIATELY.
8. SOIL UNDER BUILDINGS, PAVED AREAS AND WITHIN SLOPES GREATER THAN 3:1 (H:V) SHALL BE APPROVED, PLACED AND COMPACTED AS RECOMMENDED BY THE GEOTECHNICAL ENGINEER.

STORM DRAINAGE NOTES

1. ALL STORM DRAINAGE PIPES SHOWN SHALL BE REINFORCED CONCRETE (RCP) (MINIMUM CLASS III) UNLESS NOTED OTHERWISE. CONTRACTOR TO COORDINATE WITH THE GEOTECH TO VERIFY TYPE OF BEDDING REQUIRED BASED ON SOIL CONDITIONS. CONTRACTOR TO SELECT REQUIRED CLASS OF PIPE BASED ON DEPTH OF PIPE AND BEDDING PROVIDED PER THE AMERICAN CONCRETE PIPE ASSOCIATION GUIDELINES.
2. ALL STORM DRAINAGE CONSTRUCTION SHALL BE IN ACCORDANCE WITH THE CITY OF RALEIGH STANDARDS.
3. ALL CONCRETE SHALL MEET A MINIMUM 3000 PSI COMPRESSIVE STRENGTH.
4 ALL PIPE IN STORM DRAIN STRUCTURES SHALL BE STRUCK EVEN WITH INSIDE WALL.
5. ALL PIPE JOINTS SHALL BE MADE WITH PREFORMED JOINT SEALER, WHICH CONFORMS TO AASHTO SPECIFICATION M-198 FOR TYPE B FLEXIBLE PLASTIC GASKETS UNLESS OTHERWISE NOTED.
6. THE INTERIOR SURFACES OF ALL STORM DRAINAGE STRUCTURES SHALL BE POINTED UP AND SMOOTHED TO AN ACCEPTABLE STANDARD, USING MORTAR MIXED TO MANUFACTURER'S SPECIFICATIONS.
7. ALL BACKFILL SHALL BE NON-PLASTIC IN NATURE, FREE FROM ROOTS, VEGETATION MATTER, WASTE CONSTRUCTION MATERIAL OR OTHER OBJECTIONABLE MATERIAL. SAID MATERIAL SHALL BE CAPABLE OF BEING COMPACTED BY MECHANICAL MEANS AND SHALL HAVE NO TENDENCY TO FLOW OR BEHAVE IN A PLASTIC MANNER UNDER THE TAMPING BLOWS OR PROOF ROLLING.
8. MATERIALS DEEMED BY THE OWNER'S REPRESENTATIVE OR GEOTECH AS UNSUITABLE FOR BACKFILL PURPOSES SHALL BE REMOVED AND REPLACED WITH SUITABLE MATERIAL.
9. BACKFILLING OF TRENCHES SHALL BE ACCOMPLISHED IMMEDIATELY AFTER PIPE IS LAID. THE FILL AROUND THE PIPE SHALL BE THOROUGHLY COMPACTED TO 95 % OF THE MAXIMUM DRY DENSITY OBTAINABLE WITH THE STANDARD PROCTOR TEST. THE TOP EIGHT (8) INCHES SHALL BE COMPACTED TO 100 PERCENT STANDARD PROCTOR.
10. UNDER NO CIRCUMSTANCES SHALL WATER BE ALLOWED TO RISE IN UNBACKFILLED TRENCHES AFTER PIPE HAS BEEN PLACED.
11. ALL CONCRETE PIPE AND PRECAST STORM STRUCTURES SHALL MEET NCDOT STANDARDS BY MANUFACTURER.
12. CONTRACTOR SHALL BE RESPONSIBLE FOR CHECKING ALL PIPE AND STRUCTURES FOR CRACKS OR BREAKS, PRIOR TO INSTALLATION. ANY DAMAGED ITEMS SHALL NOT BE INSTALLED.
13. "KNOCK-OUT" BOXES OR HDPE PIPE SHALL NOT BE ALLOWED WITHIN PUBLIC RIGHT-OF-WAYS UNLESS APPROVED IN WRITING BY CITY OF RALEIGH STORMWATER DEPARTMENT.

CONSTRUCTION NOTES

1. ALL CONSTRUCTION SHALL BE IN ACCORDANCE WITH CITY OF RALEIGH AND/OR NC DOT STANDARDS.
2. THE CONTRACTOR SHALL CONDUCT THE WORK IN A SAFE MANNER WITH A MINIMUM AMOUNT OF INCONVENIENCE TO TRAFFIC.
3. THE CONTRACTOR SHALL BE RESPONSIBLE FOR ALL TRAFFIC CONTROL AND SHALL ADHERE TO THE PROVISIONS OF THE MUTCD (MOST CURRENT EDITION).
4. PRIOR TO THE START OF WORK, A PRE-CONSTRUCTION MEETING MUST BE SET UP WITH THE CONTRACTOR AND CITY OF RALEIGH TRANSPORTATION FIELD SERVICES STAFF. CONTACT ENGINEERING INSPECTIONS AT 919-996-2409 TO SET UP THE MEETING.
5. THE CONTRACTOR SHALL OBTAIN A RIGHT-OF-WAY OBSTRUCTION PERMIT FOR ANY WORK WHICH REQUIRES THE TEMPORARY CLOSURE OF A STREET, TRAVEL LANE, PARKING SPACE OR SIDEWALK FROM THE RIGHT-OF-WAY SERVICES AT LEAST 48 HOURS IN ADVANCE. ANY TEMPORARY STREET CLOSURE MUST BE SUBMITTED 2 WEEKS PRIOR. SEE "RIGHT-OF-WAY CLOSURES" ON WWW.RALEIGHNC.GOV AND SEND THE RIGHT-OF-WAY OBSTRUCTION PERMIT TO RIGHTOFWAYSERVICES@RALEIGHNC.GOV.
6. PRIOR TO CONSTRUCTION BEGINNING, ALL SIGNAGE AND TRAFFIC CONTROL SHALL BE IN PLACE.
7. THE CONTRACTOR SHALL REPAIR ALL DAMAGED INFRASTRUCTURE IN THE RIGHT-OF-WAY AND RESTORE IT TO PREVIOUS OR BETTER CONDITION.
8. THE CONTRACTOR SHALL REPAIR ANY DAMAGES TO ADJACENT PROPERTIES AND RESTORE IT TO PREVIOUS OR BETTER CONDITION.
9. ALL SIDEWALKS MUST BE ACCESSIBLE TO PERSONS WHO ARE VISUALLY IMPAIRED AND PEOPLE WITH MOBILITY DISABILITIES. EXISTING PEDESTRIAN ROUTES AND ALTERNATE PEDESTRIAN ROUTES DURING CONSTRUCTION WILL BE REQUIRED TO BE COMPLIANT WITH THE PUBLIC RIGHTS OF WAY ACCESSIBILITY GUIDELINES (PROWAG), 2010 ADA STANDARDS FOR ACCESSIBLE DESIGN AND THE MANUAL ON UNIFORM TRAFFIC CONTROL DEVICES (MUTCD).

CITY OF RALEIGH PUBLIC UTILITIES STANDARD UTILITY NOTES (AS APPLICABLE)

1. ALL MATERIALS & CONSTRUCTION METHODS SHALL BE IN ACCORDANCE WITH CITY OF RALEIGH DESIGN STANDARDS, DETAILS & SPECIFICATIONS (REFERENCE: CORPUD HANDBOOK, CURRENT EDITION).
2. UTILITY SEPARATION REQUIREMENTS:
   a) A DISTANCE OF 100' SHALL BE MAINTAINED BETWEEN SANITARY SEWER & ANY PRIVATE OR PUBLIC WATER SUPPLY SOURCE SUCH AS AN IMPOUNDED RESERVOIR USED AS A SOURCE OF DRINKING WATER. IF ADEQUATE LATERAL SEPARATION CANNOT BE ACHIEVED, FERROUS SANITARY SEWER PIPE SHALL BE SPECIFIED & INSTALLED TO WATERLINE SPECIFICATIONS. HOWEVER, THE MINIMUM SEPARATION SHALL NOT BE LESS THAN 25' FROM A PRIVATE WELL OR 50' FROM A PUBLIC WELL.
   b) WHEN INSTALLING WATER &/OR SEWER MAINS, THE HORIZONTAL SEPARATION BETWEEN UTILITIES SHALL BE 10'. IF THIS SEPARATION CANNOT BE MAINTAINED DUE TO EXISTING CONDITIONS, THE VARIATION ALLOWED IS THE WATER MAIN IN A SEPARATE TRENCH WITH THE ELEVATION OF THE WATER MAIN AT LEAST 18" ABOVE THE TOP OF THE SEWER & MUST BE APPROVED BY THE PUBLIC UTILITIES DIRECTOR. ALL DISTANCES ARE MEASURED FROM OUTSIDE DIAMETER TO OUTSIDE DIAMETER.
   c) WHERE IT IS IMPOSSIBLE TO OBTAIN PROPER SEPARATION, OR ANYTIME A SANITARY SEWER PASSES OVER A WATERMAIN, DIP MATERIALS OR STEEL ENCASEMENT EXTENDED 10' ON EACH SIDE OF CROSSING MUST BE SPECIFIED & INSTALLED TO WATERLINE SPECIFICATIONS.
   d) 5.0' MINIMUM HORIZONTAL SEPARATION IS REQUIRED BETWEEN ALL SANITARY SEWER & STORM SEWER FACILITIES, UNLESS DIP MATERIAL IS SPECIFIED FOR SANITARY SEWER.
   e) MAINTAIN 18" MIN. VERTICAL SEPARATION AT ALL WATERMAIN & RCP STORM DRAIN CROSSINGS; MAINTAIN 24" MIN. VERTICAL SEPARATION AT ALL SANITARY SEWER & RCP STORM DRAIN CROSSINGS. WHERE ADEQUATE SEPARATIONS CANNOT BE ACHIEVED, SPECIFY DIP MATERIALS & A CONCRETE CRADLE HAVING 6" MIN. CLEARANCE (PER CORPUD DETAILS W-41 & S-49).
   f) ALL OTHER UNDERGROUND UTILITIES SHALL CROSS WATER & SEWER FACILITIES WITH 18" MIN. VERTICAL SEPARATION REQUIRED.
3. ANY NECESSARY FIELD REVISIONS ARE SUBJECT TO REVIEW & APPROVAL OF AN AMENDED PLAN &/OR PROFILE BY THE CITY OF RALEIGH PUBLIC UTILITIES DEPARTMENT PRIOR TO CONSTRUCTION.
4. DEVELOPER SHALL PROVIDE 30 DAYS ADVANCE WRITTEN NOTICE TO OWNER FOR ANY WORK REQUIRED WITHIN AN EXISTING CITY OF RALEIGH UTILITY EASEMENT TRAVERSING PRIVATE PROPERTY.
5. CONTRACTOR SHALL MAINTAIN CONTINUOUS WATER & SEWER SERVICE TO EXISTING RESIDENCES & BUSINESSES THROUGHOUT CONSTRUCTION OF PROJECT. ANY NECESSARY SERVICE INTERRUPTIONS SHALL BE PRECEDED BY A 24 HOUR ADVANCE NOTICE TO THE CITY OF RALEIGH PUBLIC UTILITIES DEPARTMENT.
6. 3.0' MINIMUM COVER IS REQUIRED ON ALL WATER MAINS & SEWER FORCEMAINS. 4.0' MINIMUM COVER IS REQUIRED ON ALL REUSE MAINS.
7. IT IS THE DEVELOPER'S RESPONSIBILITY TO ABANDON OR REMOVE EXISTING WATER & SEWER SERVICES NOT BEING USED IN REDEVELOPMENT OF A SITE UNLESS OTHERWISE DIRECTED BY THE CITY OF RALEIGH PUBLIC UTILITIES DEPARTMENT. THIS INCLUDES ABANDONING TAP AT MAIN & REMOVAL OF SERVICE FROM ROW OR EASEMENT PER CORPUD HANDBOOK PROCEDURE.
8. INSTALL 4" DIP WATER SERVICES WITH METERS LOCATED AT ROW OR WITHIN A 10'X12' WATERLINE EASEMENT IMMEDIATELY ADJACENT. NOTE: IT IS THE APPLICANT'S RESPONSIBILITY TO PROPERLY SIZE THE WATER SERVICE FOR EACH CONNECTION TO PROVIDE ADEQUATE FLOW & PRESSURE.
9. INSTALL 4" PVC* SEWER SERVICES @ 1.0% MINIMUM GRADE WITH CLEANOUTS LOCATED AT ROW OR EASEMENT LINE & SPACED EVERY 75 LINEAR FEET MAXIMUM.
10. PRESSURE REDUCING VALVES ARE REQUIRED ON ALL WATER SERVICES EXCEEDING 80 PSI; BACKWATER VALVES ARE REQUIRED ON ALL SANITARY SEWER SERVICES HAVING BUILDING DRAINS LOWER THAN 1.0' ABOVE THE NEXT UPSTREAM MANHOLE.
11. ALL ENVIRONMENTAL PERMITS APPLICABLE TO THE PROJECT MUST BE OBTAINED FROM NCDWQ, USACE &/OR FEMA FOR ANY RIPARIAN BUFFER, WETLAND &/OR FLOODPLAIN IMPACTS (RESPECTIVELY) PRIOR TO CONSTRUCTION.
12. NCDOT / RAILROAD ENCROACHMENT AGREEMENTS ARE REQUIRED FOR ANY UTILITY WORK (INCLUDING MAIN EXTENSIONS & SERVICE TAPS) WITHIN STATE OR RAILROAD ROW PRIOR TO CONSTRUCTION.
13. GREASE INTERCEPTOR / OIL WATER SEPARATOR SIZING CALCULATIONS & INSTALLATION SPECIFICATIONS SHALL BE APPROVED BY THE CORPUD FOG PROGRAM COORDINATOR PRIOR TO ISSUANCE OF A BUILDING PERMIT. CONTACT STEPHEN CALVERLEY AT (919) 296-2334 OR STEPHEN.CALVERLEY@RALEIGHNC.GOV FOR MORE INFORMATION.
14. CROSS-CONNECTION CONTROL PROTECTION DEVICES ARE REQUIRED BASED ON DEGREE OF HEALTH HAZARD INVOLVED AS LISTED IN APPENDIX-B OF THE RULES GOVERNING PUBLIC WATER SYSTEMS IN NORTH CAROLINA. THESE GUIDELINES ARE THE MINIMUM REQUIREMENTS. THE DEVICES SHALL MEET AMERICAN SOCIETY OF SANITARY ENGINEERING (ASSE) STANDARDS OR BE ON THE UNIVERSITY OF SOUTHERN CALIFORNIA APPROVAL LIST. THE DEVICES SHALL BE INSTALLED AND TESTED (BOTH INITIAL AND PERIODIC TESTING THEREAFTER) IN ACCORDANCE WITH THE MANUFACTURER'S RECOMMENDATIONS OR THE LOCAL CROSS-CONNECTION CONTROL PROGRAM, WHICHEVER IS MORE STRINGENT. CONTACT JOANIE HARTLEY AT (919) 996-5923 OR JOANIE.HARTLEY@RALEIGHNC.GOV FOR MORE INFORMATION.

ADDITIONAL UTILITY NOTES

1. ALL WATER MAINS, SERVICES AND FIRE SERVICES GREATER THAN 2" DIAMETER ARE TO BE DUCTILE IRON PIPE. 2" & SMALLER DOMESTIC SERVICES MUST BE TYPE K SOFT COPPER (WITHOUT FITTINGS) TO THE WATER METER.
2. ALL SEWER MAINS SHALL BE EITHER PVC OR DUCTILE IRON PIPE AS SHOWN ON THE PLANS. ALL PIPE MATERIAL SHALL MEET CITY OF RALEIGH STANDARDS AND SPECIFICATIONS AS DEFINED IN THE LATEST ISSUE OF THE PUBLIC UTILITIES HANDBOOK AND/OR UNIFIED DEVELOPMENT ORDINANCE (UDO).
3. ALL FIRE HYDRANTS ALONG PUBLIC R/W LINES SHALL HAVE A 5'Wx5'L CITY OF RALEIGH WATERLINE EASEMENT ONTO ADJACENT PROPERTY.
4. ALL SANITARY SEWER INTERCEPTOR LINES (12" AND LARGER), AS WELL AS MANHOLES AND FITTINGS ASSOCIATED WITH THE INTERCEPTOR LINE, SHALL BE INTERNALLY LINED WITH PROTECTO 401 OR APPROVED EQUAL TO PREVENT HYDROGEN SULFIDE CORROSION. SEE THE CURRENT CITY OF RALEIGH PUBLIC UTILITIES DEPARTMENT HANDBOOK FOR APPROVED COATINGS AND APPLICATION METHODS.
5. IN ACCORDANCE WITH GENERAL STATUTE 87-121(G), ALL UNDERGROUND UTILITIES INSTALLED AFTER OCTOBER 1, 2014 SHALL BE ELECTRONICALLY LOCATABLE. CONTRACTOR SHALL COORDINATE DIRECTLY WITH THE CITY OF RALEIGH PUBLIC UTILITIES DEPARTMENT FOR DETAILS AND SPECIFICATIONS FOR MEETING THESE REQUIREMENTS.
6. EXISTING UTILITIES SHOWN ARE BASED ON FIELD SURVEYS AND THE BEST AVAILABLE RECORD DRAWINGS. THE CONTRACTOR SHALL VERIFY CONDITIONS PRIOR TO BEGINNING CONSTRUCTION. ANY DISCREPANCIES BETWEEN ACTUAL FIELD CONDITIONS AND THE PLANS SHALL BE REPORTED TO THE ENGINEER IMMEDIATELY.
7. ALL WATER AND SEWER MAINS WITHIN PUBLIC EASEMENTS OR RIGHTS-OF-WAY TO BE OWNED, OPERATED, AND MAINTAINED BY THE CITY OF RALEIGH.
8. ALL WATER AND SEWER MAINS NOT WITHIN PUBLIC EASEMENTS OR RIGHTS-OF-WAY TO BE PRIVATELY OWNED, OPERATED, AND MAINTAINED BY THE PROPERTY OWNER.
9. CONTRACTOR SHALL NOTIFY "NC811" (811) OR (1-800-632-4949) AT LEAST 3 FULL BUSINESS DAYS PRIOR TO BEGINNING CONSTRUCTION OR EXCAVATION TO HAVE EXISTING UTILITIES LOCATED. CONTRACTOR SHALL CONTACT ANY LOCAL UTILITIES THAT PROVIDE THEIR OWN LOCATOR SERVICES INDEPENDENT OF "NC811". REPORT ANY DISCREPANCIES TO THE ENGINEER IMMEDIATELY.
10. ALL UTILITY SLEEVES SHALL BE SCHEDULE 40 PVC AND INSTALLED WITH 2' MINIMUM COVER. BOTH ENDS SHALL BE CAPPED AND MARKED.

SEE SHEET C6.00 FOR ALL PROJECT, SITE, GRADING, STORM DRAINAGE AND UTILITY NOTES

ALL CONSTRUCTION SHALL BE IN ACCORDANCE WITH THE CURRENT CITY OF RALEIGH AND NCDOT (WHERE APPLICABLE) ENGINEERING DESIGN AND CONSTRUCTION STANDARDS

PRELIMINARY DRAWING - NOT RELEASED FOR CONSTRUCTION

MCADAMS

The John R. McAdams Company, Inc.
621 Hillsborough Street
Suite 500
Raleigh, NC 27603

phone 919. 361. 5000
fax 919. 361. 2269
license number: C-0293, C-187

www.mcadamsco.com

CLIENT

HALLE BUILDING GROUP
56 HUNTER STREET, STE. 110
APEX, NC 27502
ERIC RIFKIN
PHONE: 919. 387. 1885

Halle BUILDING GROUP

5000 LOUISBURG ROAD
ADMINISTRATIVE SITE REVIEW
5000 LOUISBURG ROAD
RALEIGH, NC

[redacted]

REVISIONS

NO.	DATE
1	
2	
3	
4	
5	
6	

PLAN INFORMATION

PROJECT NO.	HLE-23002
FILENAME	HLE23002-ASR-N1
CHECKED BY	JCM
DRAWN BY	RJF/SJB
SCALE	NTS
DATE	02. 09. 2024

SHEET

PROJECT NOTES

C0.00

M:\Projects\HLE\HLE23002\04-Production\Engineering\Production Drawings\Administrative Site Review\HLE23002-ASR-N1.dwg, 2/9/2024 4:28:37 PM, Savana Bennett

LINE TABLE		
LINE	BEARING	DISTANCE
L1	S 86°26'30" W	23.99'
L2	N 29°03'45" W	34.57'
L3	N 51°53'03" E	42.78'
L4	N 59°25'19" E	7.71'
L5	S 18°06'23" E	33.58'
L6	N 57°55'25" E	22.74'

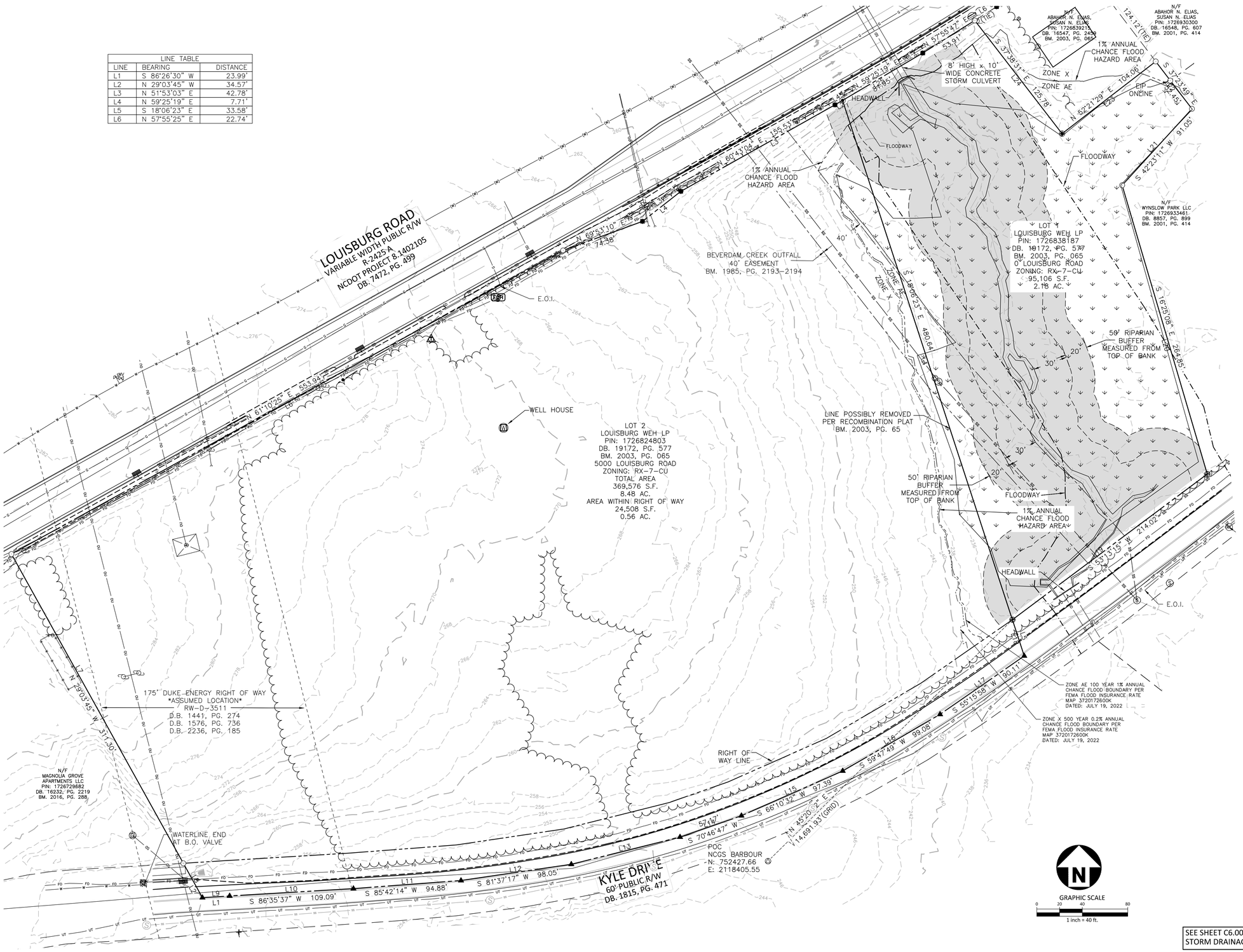

SEE SHEET C6.00 FOR ALL PROJECT, SITE, GRADING, STORM DRAINAGE AND UTILITY NOTES

ALL CONSTRUCTION SHALL BE IN ACCORDANCE WITH THE CURRENT CITY OF RALEIGH AND NCDOT (WHERE APPLICABLE) ENGINEERING DESIGN AND CONSTRUCTION STANDARDS

PRELIMINARY DRAWING - NOT RELEASED FOR CONSTRUCTION

McADAMS
The John R. McAdams Company, Inc.
621 Hillsborough Street
Suite 500
Raleigh, NC 27603
phone 919. 361. 5000
fax 919. 361. 2269
license number: C-0293, C-187
www.mcadamsco.com

CLIENT

HALLE BUILDING GROUP
56 HUNTER STREET, STE. 110
APEX, NC 27502
ERIC RIFKIN
PHONE: 919. 387. 1885

Halle BUILDING GROUP

5000 LOUISBURG ROAD
ADMINISTRATIVE SITE REVIEW
5000 LOUISBURG ROAD
RALEIGH, NC

PRELIMINARY
NOT FOR CONSTRUCTION

REVISIONS

NO.	DATE
1	
2	
3	
4	
5	
6	

PLAN INFORMATION

PROJECT NO.	HLE-23002
FILENAME	HLE23002-ASR-XC1
CHECKED BY	JCM
DRAWN BY	RJF
SCALE	1" = 40'
DATE	02. 09. 2024

SHEET

EXISTING CONDITIONS

C1.00

M:\Projects\HLE\HLE23002\04-Production\Engineering\Production Drawings\Current Drawings\Administrative Site Review\HLE23002-ASR-XC1.dwg, 2/9/2024 4:35:23 PM, Savana Bennett

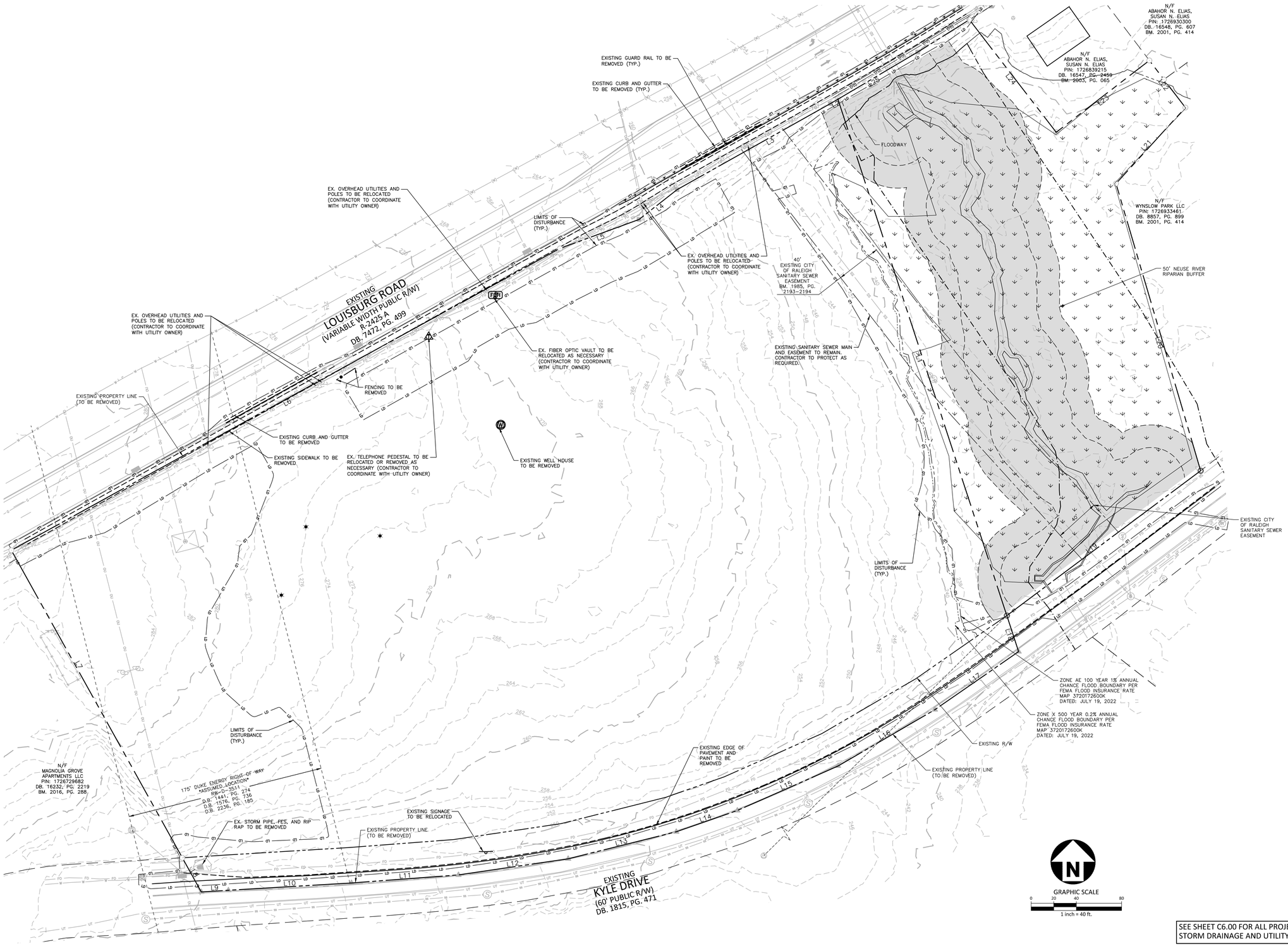

SEE SHEET C6.00 FOR ALL PROJECT, SITE, GRADING, STORM DRAINAGE AND UTILITY NOTES

ALL CONSTRUCTION SHALL BE IN ACCORDANCE WITH THE CURRENT CITY OF RALEIGH AND NCDOT (WHERE APPLICABLE) ENGINEERING DESIGN AND CONSTRUCTION STANDARDS

PRELIMINARY DRAWING - NOT RELEASED FOR CONSTRUCTION

McADAMS

The John R. McAdams Company, Inc.
621 Hillsborough Street
Suite 500
Raleigh, NC 27603

phone 919. 361. 5000
fax 919. 361. 2269
license number: C-0293, C-187

www.mcadamsco.com

CLIENT

HALLE BUILDING GROUP
56 HUNTER STREET, STE. 110
APEX, NC 27502
ERIC RIFKIN
PHONE: 919. 387. 1885

Halle BUILDING GROUP

5000 LOUISBURG ROAD
ADMINISTRATIVE SITE REVIEW
5000 LOUISBURG ROAD
RALEIGH, NC

[redacted]

REVISIONS

NO.	DATE
1	
2	
3	
4	
5	
6	

PLAN INFORMATION

PROJECT NO.	HLE-23002
FILENAME	HLE23002-ASR-DM1
CHECKED BY	JCM
DRAWN BY	RJF
SCALE	1" = 40'
DATE	02. 09. 2024

SHEET

DEMOLITION PLAN

C1.01

M:\Projects\HLE\HLE23002\04-Production\Engineering\Production Drawings\Current Drawings\Administrative Site Review\HLE23002-ASR-DM1.dwg, 2/9/2024 4:29:04 PM, Savana Bennett

LINE TABLE					
LINE #	LENGTH	DIRECTION	LINE #	LENGTH	DIRECTION
L1	480.640	N18° 06' 22.73"W	L15	97.394	N66° 10' 32.27"E
L2	7.706	S59° 25' 19.43"W	L16	99.084	N59° 47' 49.27"E
L3	155.529	S60° 43' 04.38"W	L17	90.112	N55° 15' 58.27"E
L4	42.778	S51° 53' 03.13"W	L18	33.578	N18° 06' 22.73"W
L5	74.385	S69° 53' 09.81"W	L19	214.018	N53° 13' 15.06"E
L6	553.936	S61° 10' 25.30"W	L20	264.846	N16° 25' 07.90"W
L7	311.298	S29° 03' 44.96"E	L21	91.053	N42° 23' 10.55"E
L8	34.572	S29° 03' 44.96"E	L22	52.448	N37° 23' 48.94"W
L9	23.986	N86° 26' 30.27"E	L23	104.060	S52° 21' 29.10"W
L10	109.087	N86° 35' 37.27"E	L24	125.783	N37° 38' 30.90"W
L11	94.883	N85° 42' 14.27"E	L25	81.954	S59° 25' 19.43"W
L12	98.054	N81° 37' 17.27"E			
L13	98.604	N75° 58' 00.27"E			
L14	57.174	N70° 46' 47.27"E			

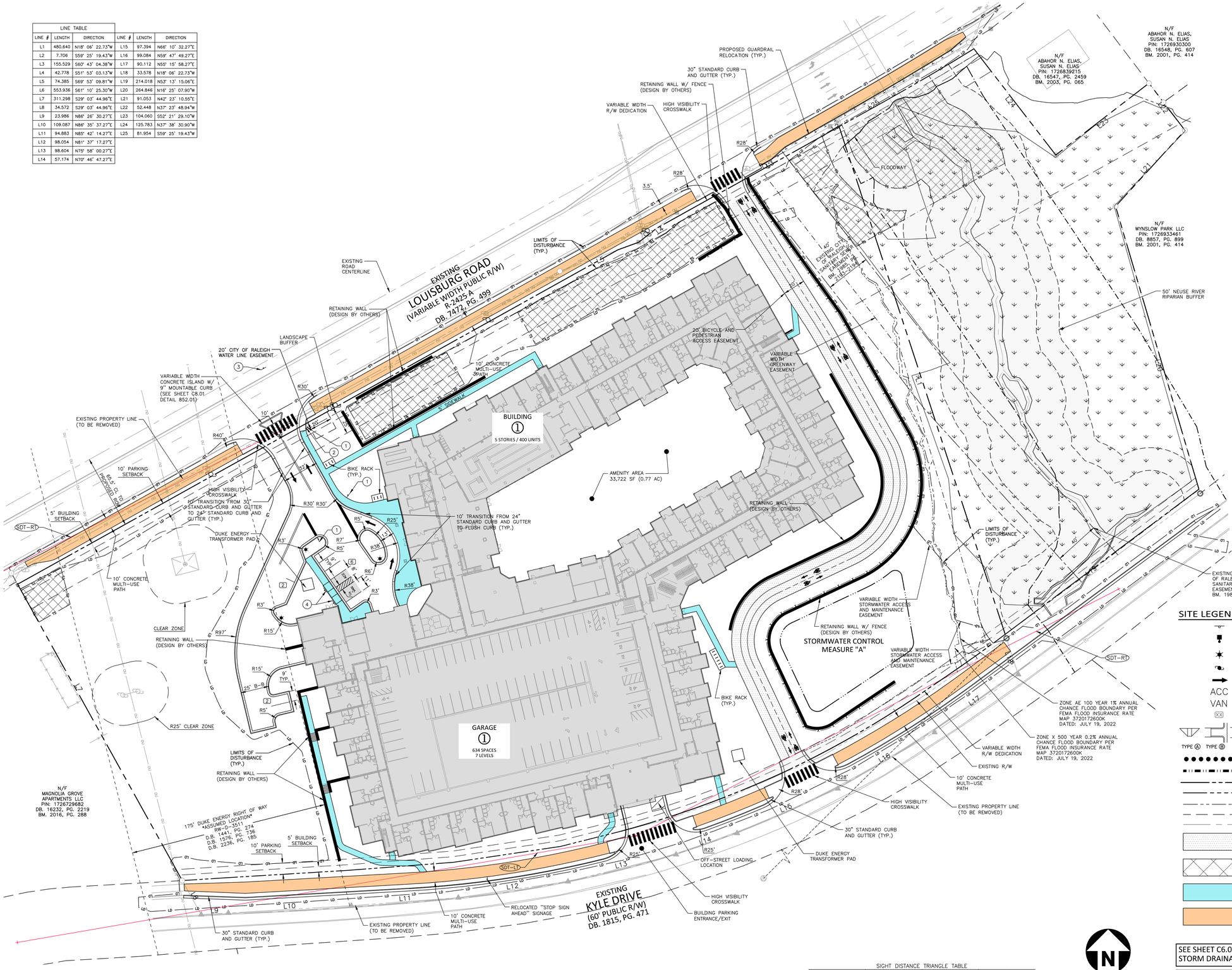

SIGNAGE LEGEND

1. STOP — MUTCD (R1-1)
2. ONLY — MUTCD (R3-5R)
3. ONE WAY — MUTCD (R6-1R)
4. RESERVED PARKING / MAXIMUM PENALTY $250 / VAN ACCESSIBLE — MUTCD (R7-8, R7-8A)

SITE LEGEND

- SIGNAGE
- YARD LIGHTS
- LIGHT POLE
- POWER POLE
- TRAFFIC DIRECTIONAL ARROW
- ACC — ACCESSIBLE PARKING STALL
- VAN — VAN ACCESSIBLE PARKING STALL
- XX — PARKING SPACE COUNT
- TYPE A, TYPE B, TYPE C — ACCESSIBLE RAMPS
- ACCESSIBLE ROUTE
- PHASE LINE
- PROPERTY LINE
- RIGHT-OF-WAY LINE
- LOT LINE
- EASEMENT LINE
- CENTERLINE
- LIGHT DUTY ASPHALT PAVEMENT
- TREE CONSERVATION AREA
- 5' CONCRETE SIDEWALK
- 10' CONCRETE SIDEWALK

SIGHT DISTANCE TRIANGLE TABLE

SPEED LIMIT	DESIGN SPEED	LEFT TURN	RIGHT TURN
45 MPH	50 MPH	14.5'X555' (SDT-LT)	14.5'X480' (SDT-RT)
50 MPH	55 MPH	N/A	14.5'x610' (SDT-RT)

GRAPHIC SCALE 0 20 40 80 — 1 inch = 40 ft.

SEE SHEET C6.00 FOR ALL PROJECT, SITE, GRADING, STORM DRAINAGE AND UTILITY NOTES

ALL CONSTRUCTION SHALL BE IN ACCORDANCE WITH THE CURRENT CITY OF RALEIGH AND NCDOT (WHERE APPLICABLE) ENGINEERING DESIGN AND CONSTRUCTION STANDARDS

PRELIMINARY DRAWING - NOT RELEASED FOR CONSTRUCTION

MCADAMS
The John R. McAdams Company, Inc.
621 Hillsborough Street
Suite 500
Raleigh, NC 27603
phone 919. 361. 5000
fax 919. 361. 2269
license number: C-0293, C-187
www.mcadamsco.com

CLIENT

HALLE BUILDING GROUP
56 HUNTER STREET, STE. 110
APEX, NC 27502
ERIC RIFKIN
PHONE: 919. 387. 1885

5000 LOUISBURG ROAD
ADMINISTRATIVE SITE REVIEW
5000 LOUISBURG ROAD
RALEIGH, NC

REVISIONS

NO.	DATE
1	
2	
3	
4	
5	
6	

PLAN INFORMATION

PROJECT NO.	HLE-23002
FILENAME	HLE23002-ASR-S1
CHECKED BY	JCM
DRAWN BY	RJF
SCALE	1" = 40'
DATE	02. 09. 2024

SHEET

SITE PLAN

C2.00

M:\Projects\HLE\HLE23002\04-Production\Engineering\Production Drawings\Current Drawings\Administrative Site Review\HLE23002-ASR-S1.dwg, 2/9/2024 4:29:34 PM, Savana Bennett

GRADING LEGEND

- FLARED END SECTION
- ENDWALL SECTION
- CATCH BASIN
- DROP INLET
- STORM SERVICE INLET
- STORM SERVICE CLEANOUT
- JUNCTION BOX
- DRAINAGE FLOW ARROW
- LINE BREAK SYMBOL
- 250.50 / 250.00 — TOP & BOTTOM CURB ELEVATIONS
- TW=223.00 / BW=213.00 — TOP OF WALL ELEVATION / BOTTOM OF WALL ELEVATION (NOTE: BOTTOM OF WALL IS GROUND ELEVATION NOT WALL FOUNDATION)
- + 250.60 — SPOT ELEVATION
- STORM DRAINAGE
- STORM SERVICE LINE
- RD — RD — RD — ROOF DRAIN, 8" ADS NON-PERFORATED TUBING OR EQUAL 1.0% MIN. SLOPE 3' MIN. COVER PVC SCHEDULE 40 IN TRAFFIC AREAS
- TP — TP — TP — TREE PROTECTION FENCE
- LD — LD — LIMITS OF DISTURBANCE
- WOODED AREA
- 250 — MAJOR CONTOUR
- 252 — MINOR CONTOUR
- 250 — EXISTING MAJOR CONTOUR
- 252 — EXISTING MINOR CONTOUR
- EASEMENT LINE
- ACCESSIBLE PARKING AREA (2% MAX. SLOPE IN ALL DIRECTIONS)

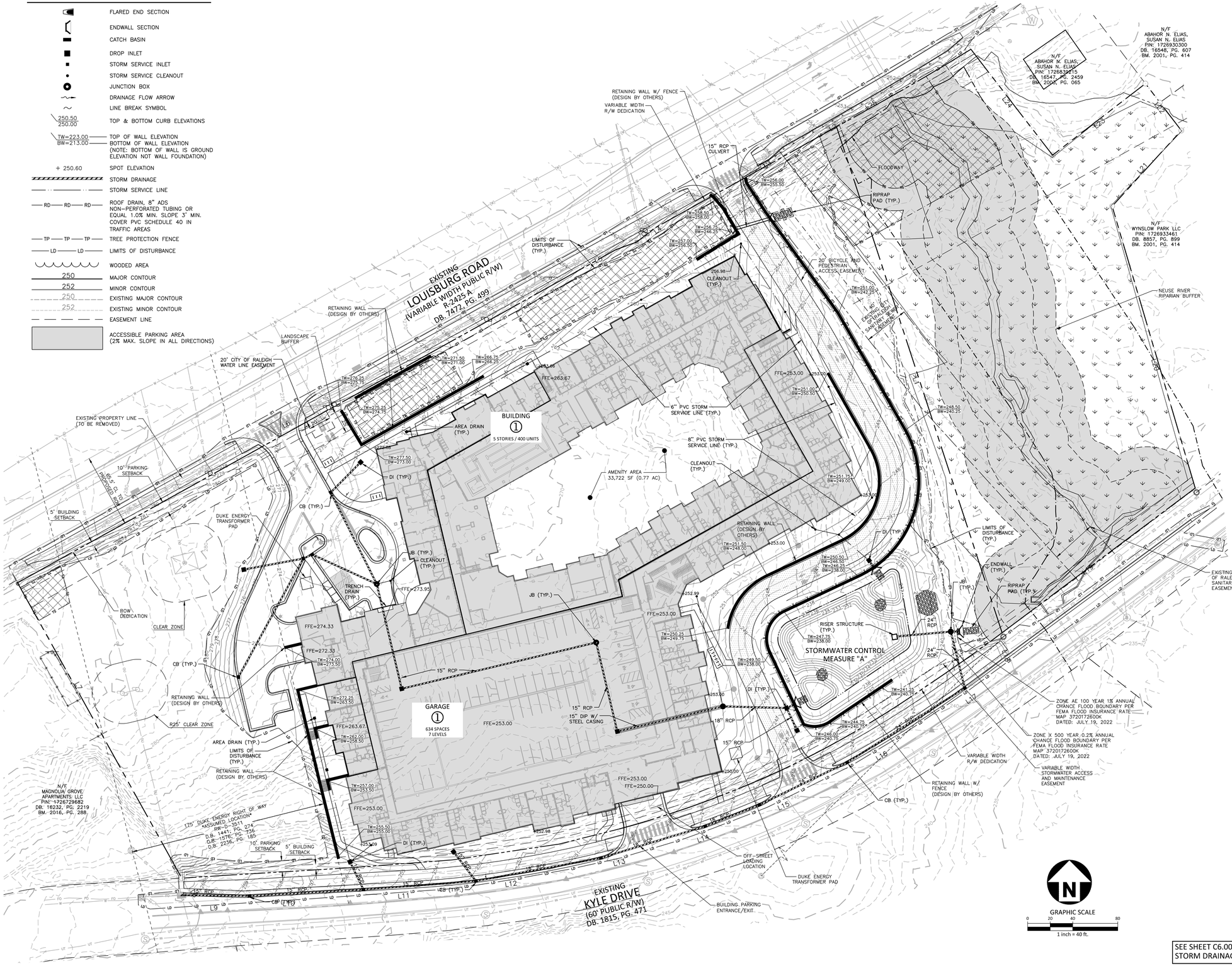

SEE SHEET C6.00 FOR ALL PROJECT, SITE, GRADING, STORM DRAINAGE AND UTILITY NOTES

ALL CONSTRUCTION SHALL BE IN ACCORDANCE WITH THE CURRENT CITY OF RALEIGH AND NCDOT (WHERE APPLICABLE) ENGINEERING DESIGN AND CONSTRUCTION STANDARDS

PRELIMINARY DRAWING - NOT RELEASED FOR CONSTRUCTION

McADAMS

The John R. McAdams Company, Inc.
621 Hillsborough Street
Suite 500
Raleigh, NC 27603

phone 919. 361. 5000
fax 919. 361. 2269
license number: C-0293, C-187

www.mcadamsco.com

CLIENT

HALLE BUILDING GROUP
56 HUNTER STREET, STE. 110
APEX, NC 27502
ERIC RIFKIN
PHONE: 919. 387. 1885

Halle BUILDING GROUP

5000 LOUISBURG ROAD
ADMINISTRATIVE SITE REVIEW
5000 LOUISBURG ROAD
RALEIGH, NC

[redacted]

REVISIONS

NO.	DATE
1	
2	
3	
4	
5	
6	

PLAN INFORMATION

PROJECT NO.	HLE-23002
FILENAME	HLE23002-ASR-G1
CHECKED BY	JCM
DRAWN BY	RJF
SCALE	1" = 40'
DATE	02. 09. 2024

SHEET

GRADING AND STORM DRAINAGE PLAN

C3.00

M:\Projects\HLE\HLE23002\04-Production\Engineering\Production Drawings\Current Drawings\Administrative Site Review\HLE23002-ASR-G1.dwg, 2/9/2024 4:29:59 PM, Savana Bennett

UTILITY LEGEND

- FIRE HYDRANT ASSEMBLY
- FIRE DEPARTMENT CONNECTION (FDC)
- WATER METER
- WATER VALVE
- PIV — POST INDICATOR VALVE
- VALVE IN MANHOLE
- METER & VAULT
- N — BACKFLOW PREVENTER
- REDUCER
- PLUG
- BLOW-OFF ASSEMBLY
- SANITARY SEWER MANHOLE
- SEWER CLEAN-OUT
- GREASE TRAP
- SEWER FLOW DIRECTION ARROW
- YARD LIGHTS
- LIGHT POLE
- POWER POLE
- LINE BREAK SYMBOL
- WATERLINE
- WATER SERVICE LINE
- UTILITY SLEEVE
- SANITARY SEWER
- SEWER SERVICE LINE
- FM — SEWER FORCE MAIN
- G — GAS LINE
- OU — OVERHEAD UTILITY
- UE — UNDERGROUND ELECTRIC
- T — TELEPHONE
- EASEMENT LINE

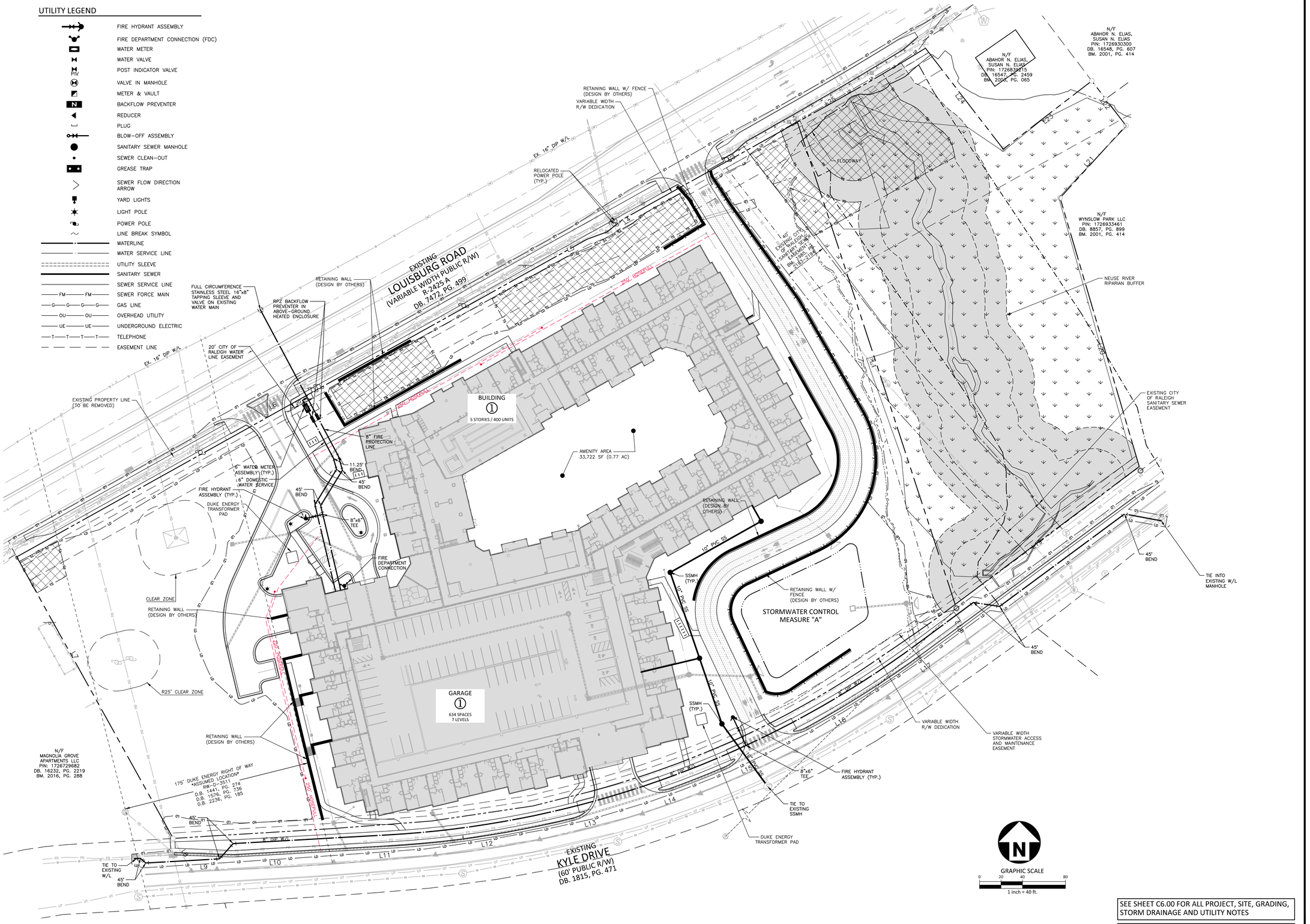

SEE SHEET C6.00 FOR ALL PROJECT, SITE, GRADING, STORM DRAINAGE AND UTILITY NOTES

ALL CONSTRUCTION SHALL BE IN ACCORDANCE WITH THE CURRENT CITY OF RALEIGH AND NCDOT (WHERE APPLICABLE) ENGINEERING DESIGN AND CONSTRUCTION STANDARDS

PRELIMINARY DRAWING - NOT RELEASED FOR CONSTRUCTION

McADAMS

The John R. McAdams Company, Inc.
621 Hillsborough Street
Suite 500
Raleigh, NC 27603

phone 919. 361. 5000
fax 919. 361. 2269
license number: C-0293, C-187

www.mcadamsco.com

CLIENT

HALLE BUILDING GROUP
56 HUNTER STREET, STE. 110
APEX, NC 27502
ERIC RIFKIN
PHONE: 919. 387. 1885

Halle BUILDING GROUP

5000 LOUISBURG ROAD
ADMINISTRATIVE SITE REVIEW
5000 LOUISBURG ROAD
RALEIGH, NC

[redacted]

REVISIONS

NO.	DATE
1	
2	
3	
4	
5	
6	

PLAN INFORMATION

PROJECT NO.	HLE-23002
FILENAME	HLE23002-ASR-U1
CHECKED BY	JCM
DRAWN BY	RJF
SCALE	1" = 40'
DATE	02. 09. 2024

SHEET

UTILITY PLAN

C4.00

M:\Projects\HLE\HLE23002\04-Production\Engineering\Production Drawings\Current Drawings\Administrative Site Review\HLE23002-ASR-U1.dwg, 2/9/2024 4:30:24 PM, Savana Bennett

LIGHTING LEGEND

- YARD LIGHTS
- LIGHT POLE

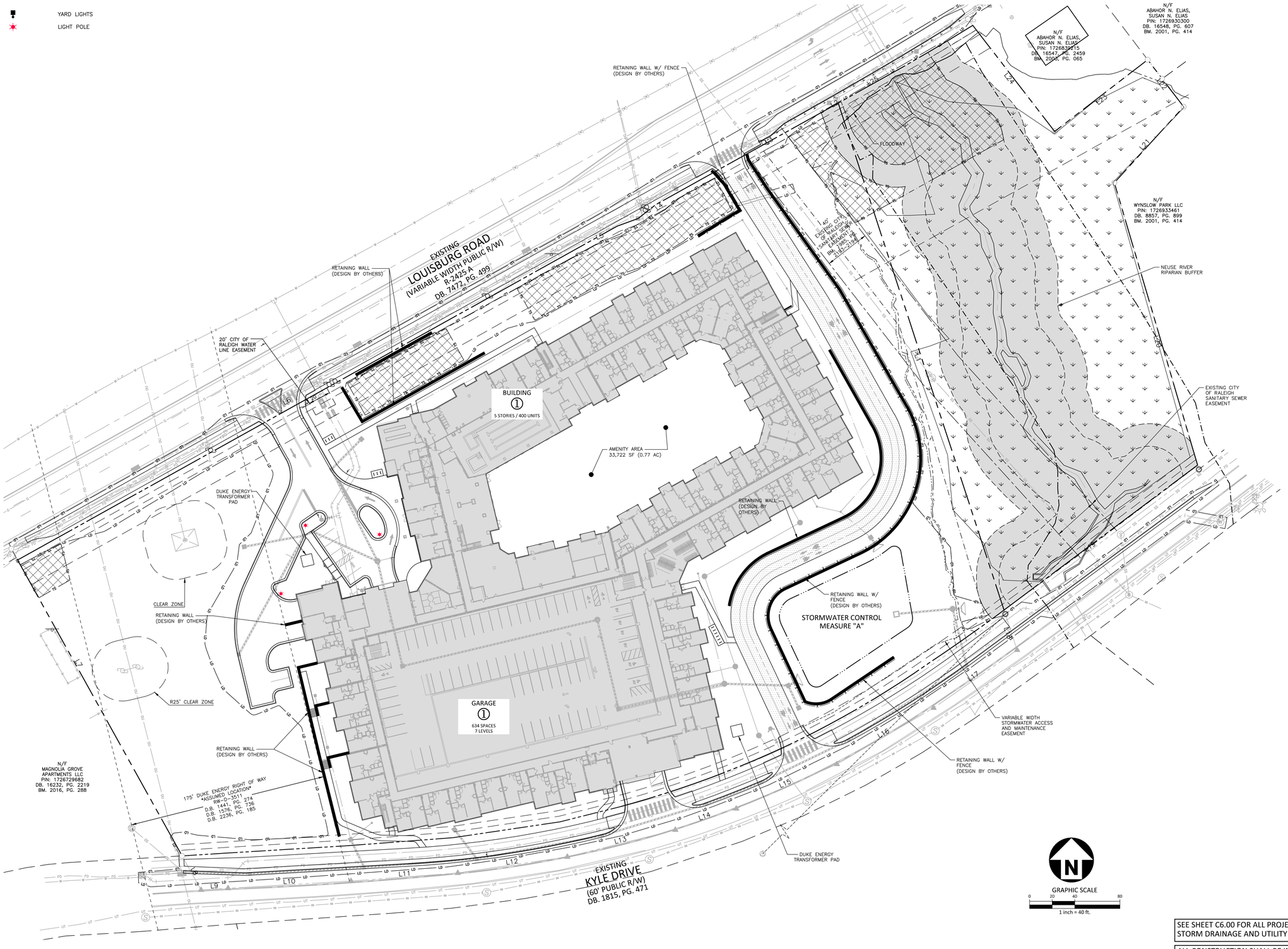

SEE SHEET C6.00 FOR ALL PROJECT, SITE, GRADING, STORM DRAINAGE AND UTILITY NOTES

ALL CONSTRUCTION SHALL BE IN ACCORDANCE WITH THE CURRENT CITY OF RALEIGH AND NCDOT (WHERE APPLICABLE) ENGINEERING DESIGN AND CONSTRUCTION STANDARDS

PRELIMINARY DRAWING - NOT RELEASED FOR CONSTRUCTION

McADAMS

The John R. McAdams Company, Inc.
621 Hillsborough Street
Suite 500
Raleigh, NC 27603

phone 919. 361. 5000
fax 919. 361. 2269
license number: C-0293, C-187

www.mcadamsco.com

CLIENT

HALLE BUILDING GROUP
56 HUNTER STREET, STE. 110
APEX, NC 27502
ERIC RIFKIN
PHONE: 919. 387. 1885

Halle BUILDING GROUP

5000 LOUISBURG ROAD
ADMINISTRATIVE SITE REVIEW
5000 LOUISBURG ROAD
RALEIGH, NC

[redacted]

REVISIONS

NO.	DATE
1	
2	
3	
4	
5	
6	

PLAN INFORMATION

PROJECT NO.	HLE-23002
FILENAME	HLE23002-ASR-L1
CHECKED BY	JCM
DRAWN BY	RJF
SCALE	1" = 40'
DATE	02. 09. 2024

SHEET

LIGHTING PLAN

C7.00

M:\Projects\HLE\HLE23002\04-Production\Engineering\Production Drawings\Current Drawings\Administrative Site Review\HLE23002-ASR-L1.dwg, 2/9/2024 4:30:53 PM, Savana Bennett

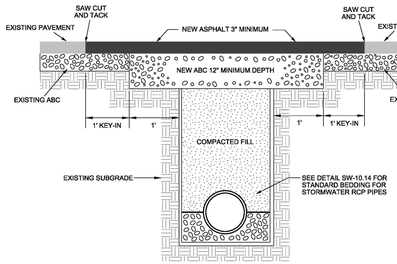

NOTES:

1. THE PAVEMENT EDGE SHALL BE DEFINED BY A STRAIGHT EDGE FORMED BY A MACHINED SAW CUT.
2. THE TRENCH SUBGRADE MATERIAL SHALL BE BACKFILLED WITH SUITABLE MATERIAL AND COMPACTED TO A DENSITY OF AT LEAST 95% OF THAT OBTAINED BY COMPACTING A SAMPLE OF THE MATERIAL IN ACCORDANCE WITH AASHTO T-99 AS MODIFIED BY NCDOT.
3. THE FINAL 1' OF FILL SHALL CONSIST OF ABC MATERIAL COMPACTED TO A DENSITY EQUAL TO 100% OF THAT OBTAINED BY COMPACTING A SAMPLE OF THE MATERIAL IN ACCORDANCE WITH AASHTO T-80 AS MODIFIED BY NCDOT. BITUMINOUS BASE OR BINDER MAY BE SUBSTITUTED IF APPROVED BY TRANSPORTATION DIRECTOR OR DESIGNEE.
4. THE ENTIRE THICKNESS/VERTICAL EDGE OF THE CUT SHALL BE TACKED.
5. THE SAME DEPTH OF PAVEMENT MATERIAL WHICH EXISTS SHALL BE REINSTALLED, BUT IN NO CASE SHALL THE ASPHALT BE LESS THAN 3" THICK.
6. THE ASPHALT PAVEMENT MATERIAL SHALL BE INSTALLED AND COMPACTED THOROUGHLY AND ROLLED WITH A SMOOTH DRUM ROLLER TO ACHIEVE A SMOOTH, LEVEL PATCH.

SHEET 1 OF 2

CITY OF RALEIGH
STANDARD DETAIL

REVISIONS	DATE: 8/03/22	NOT TO SCALE
DATE: 08/05/23	ASPHALT PAVEMENT PATCH AND RCP PIPE BACKFILL	
	T-10.05.1	

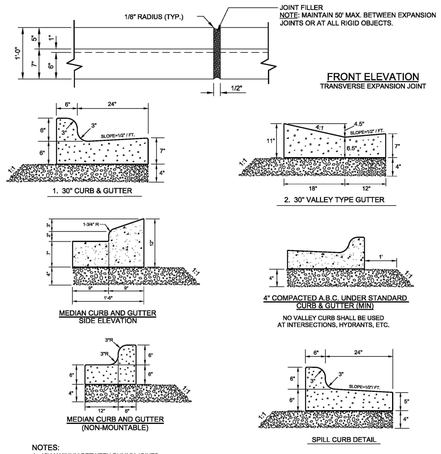

NOTES:

1. 10' MAXIMUM BETWEEN DUMMY JOINTS. 15' MAXIMUM BETWEEN DUMMY JOINTS ON MACHINE POURS.
2. 1/2" EXPANSION JOINT EVERY 50'.
3. 3000 PSI CONCRETE MINIMUM, 4" SLUMP MAXIMUM.
4. LIQUID MEMBRANE CURING COMPOUND SHALL MEET THE REQUIREMENTS OF SECTION 1026-2 OF NCDOT STANDARDS & SPECIFICATIONS FOR ROADS AND STRUCTURES.
5. ALL CONSTRUCTION JOINTS SHALL BE FILLED WITH JOINT FILLER AND SEALER IN ACCORDANCE WITH NCDOT ROADWAY STANDARD DETAIL 846.01 THE JOINT MATERIAL SHALL CONFORM TO SECTION 1028-2 OF NCDOT STANDARD & SPECIFICATIONS FOR ROADS AND STRUCTURES.
6. REFER TO NCDOT DETAIL 846.01 FOR CURB AND GUTTER SUPERELEVATION RATES.

SHEET 1 OF 2

CITY OF RALEIGH
STANDARD DETAIL

REVISIONS	DATE: 8/03/22	NOT TO SCALE
	CURB AND GUTTER	
	T-10.26.1	

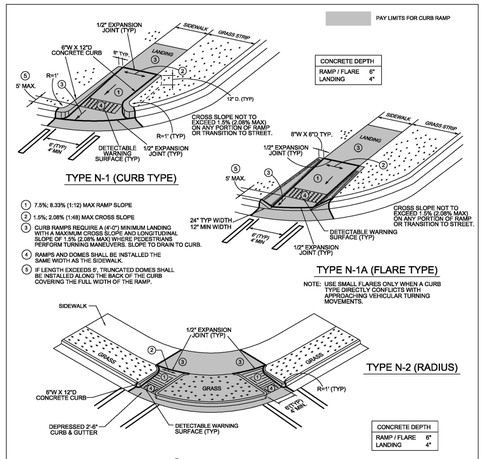

1. 7.5%; 8.33% (1:12) MAX RAMP SLOPE
2. 1.5%; 2.08% (1:48) MAX CROSS SLOPE
3. CURB RAMPS REQUIRE A (4'-0") MINIMUM LANDING WITH A MAXIMUM CROSS SLOPE AND LONGITUDINAL SLOPE OF 1.5% (2.08% MAX) WHERE PEDESTRIANS PERFORM TURNING MANEUVERS. SLOPE TO DRAIN TO CURB.
4. RAMPS AND DOMES SHALL BE INSTALLED THE SAME WIDTH AS THE SIDEWALK.
5. IF LENGTH EXCEEDS 6', TRUNCATED DOMES SHALL BE INSTALLED ALONG THE BACK OF THE CURB COVERING THE FULL WIDTH OF THE RAMP.

SHEET 2 OF 9

CITY OF RALEIGH
STANDARD DETAIL

REVISIONS	DATE: 8/03/22	NOT TO SCALE
DATE: 12/05/22	CURB RAMPS (NEW DEVELOPMENT)	
	T-20.01.2	

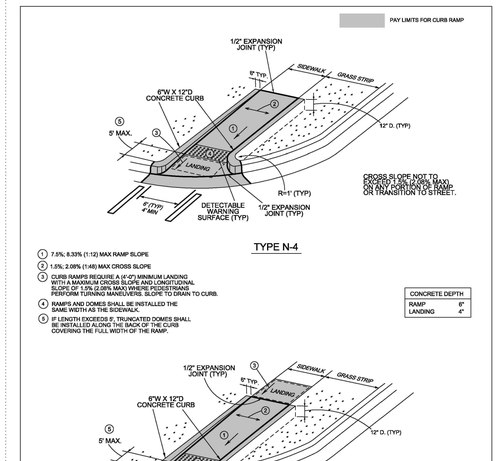

1. 7.5%; 8.33% (1:12) MAX RAMP SLOPE
2. 1.5%; 2.08% (1:48) MAX CROSS SLOPE
3. CURB RAMPS REQUIRE A (4'-0") MINIMUM LANDING WITH A MAXIMUM CROSS SLOPE AND LONGITUDINAL SLOPE OF 1.5% (2.08% MAX) WHERE PEDESTRIANS PERFORM TURNING MANEUVERS. SLOPE TO DRAIN TO CURB.
4. RAMPS AND DOMES SHALL BE INSTALLED THE SAME WIDTH AS THE SIDEWALK.
5. IF LENGTH EXCEEDS 6', TRUNCATED DOMES SHALL BE INSTALLED ALONG THE BACK OF THE CURB COVERING THE FULL WIDTH OF THE RAMP.

SHEET 4 OF 9

CITY OF RALEIGH
STANDARD DETAIL

REVISIONS	DATE: 8/03/22	NOT TO SCALE
DATE: 12/05/22	CURB RAMPS (NEW DEVELOPMENT)	
	T-20.01.4	

CITY OF RALEIGH CURB RAMPS GENERAL NOTES

1. CITY OF RALEIGH STANDARD CURB RAMPS HAVE BEEN DEVELOPED IN ACCORDANCE WITH THE AMERICANS WITH DISABILITIES ACT (ADA) AND PUBLIC RIGHT OF WAY ACCESS GUIDELINES (PROWAG).
2. CURB RAMPS SHALL BE PROVIDED AT LOCATIONS AS SHOWN ON THE PLANS OR AS DIRECTED BY THE ENGINEER. SIDEWALK ACCESS RAMPS SHALL BE LOCATED AS INDICATED IN THE DETAIL, HOWEVER, THE LOCATION MAY BE ADJUSTED IN COORDINATION WITH THE CITY OF RALEIGH WHERE EXISTING LIGHT POLES, FIRE HYDRANTS, DROP INLETS, ETC. AFFECT PLACEMENT.
3. DOUBLE WHEELCHAIR RAMPS ARE TO BE INSTALLED AT ALL PUBLIC STREET INTERSECTIONS WHERE SIDEWALK IS REQUIRED.
4. THE WALKING SURFACE SHALL BE SLIP RESISTANT. THE COLOR FOR THE DETECTABLE WARNING AREA SHALL BE YELLOW FOR CONTRAST.
5. NO SLOPE ON THE SIDEWALK ACCESS RAMP SHALL EXCEED 1"/FT (12:1) IN RELATIONSHIP TO THE GRADE OF THE STREET.
6. IN NO CASE SHALL THE WIDTH OF THE SIDEWALK ACCESS RAMP BE LESS THAN 48" ALL RAMPS SHALL BE INSTALLED THE SAME WIDTH AS THE SIDEWALK.
7. USE CLASS A (3000 PSI) CONCRETE WITH A SIDEWALK FINISH IN ORDER TO OBTAIN A ROUGH NONSKID SURFACE.
8. A 1/2" EXPANSION JOINT INSTALLED FULL DEPTH WILL BE REQUIRED WHERE THE CONCRETE SIDEWALK ACCESS RAMP JOINS THE CURB AND ALSO WHERE NEW CONCRETE ABUTS EXISTING CONCRETE.
9. CURB RAMPS SHOULD BE PLACED PARALLEL TO THE DIRECTION OF TRAVEL.

SHEET 8 OF 9

CITY OF RALEIGH
STANDARD DETAIL

REVISIONS	DATE: 8/03/22	NOT TO SCALE
	CURB RAMP NOTES	
	T-20.01.8	

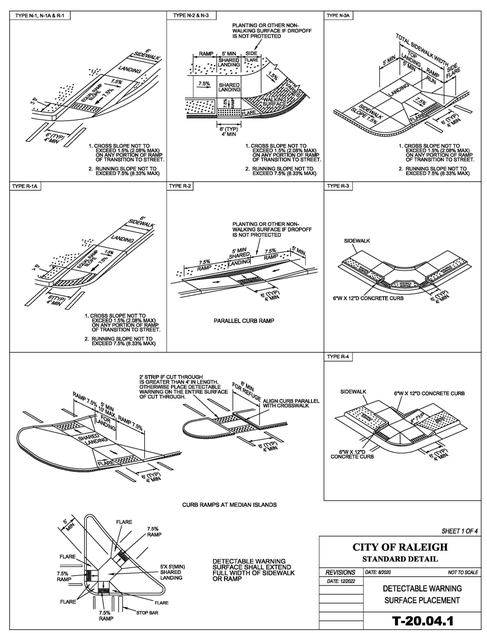

SHEET 1 OF 4

CITY OF RALEIGH
STANDARD DETAIL

REVISIONS	DATE: 8/03/22	NOT TO SCALE
DATE: 12/05/22	DETECTABLE WARNING SURFACE PLACEMENT	
	T-20.04.1	

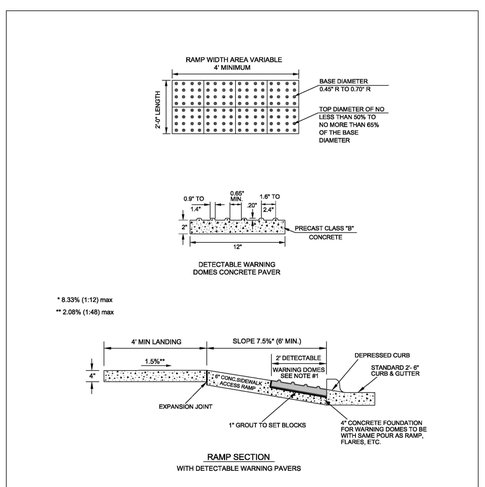

NOTES:

1. DETECTABLE WARNING DOMES SHALL COVER 2'-0" LENGTH AND FULL WIDTH OF THE RAMP FLOOR AS SHOWN ON DETAIL. SIZE OF PAVER SHALL BE 1' X 1'.
2. THE COLOR FOR THE DETECTABLE WARNING AREA SHALL BE YELLOW FOR CONTRAST.

SHEET 2 OF 4

CITY OF RALEIGH
STANDARD DETAIL

REVISIONS	DATE: 8/03/22	NOT TO SCALE
DATE: 12/05/22	DETECTABLE WARNING SURFACE PAVERS	
	T-20.04.2	

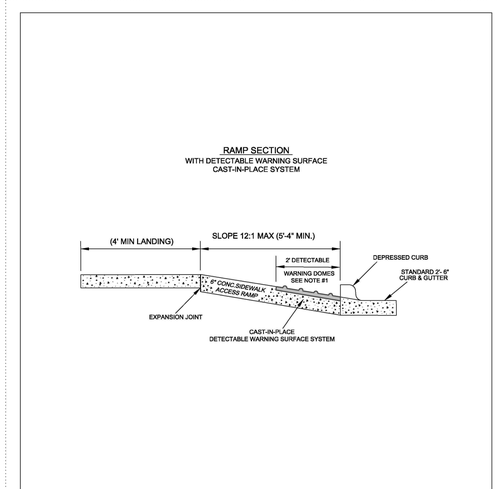

NOTES:

1. DETECTABLE WARNING DOMES SHALL COVER 2'-0" LENGTH AND FULL WIDTH OF THE RAMP FLOOR AS SHOWN ON DETAIL.
2. THE COLOR FOR THE DETECTABLE WARNING AREA SHALL BE YELLOW FOR CONTRAST.

SHEET 4 OF 4

CITY OF RALEIGH
STANDARD DETAIL

REVISIONS	DATE: 8/03/22	NOT TO SCALE
DATE: 12/05/22	DETECTABLE WARNING CAST-IN-PLACE	
	T-20.04.4	

SEE SHEET C6.00 FOR ALL PROJECT, SITE, GRADING, STORM DRAINAGE AND UTILITY NOTES

ALL CONSTRUCTION SHALL BE IN ACCORDANCE WITH THE CURRENT CITY OF RALEIGH AND NCDOT (WHERE APPLICABLE) ENGINEERING DESIGN AND CONSTRUCTION STANDARDS

PRELIMINARY DRAWING - NOT RELEASED FOR CONSTRUCTION

MCADAMS
The John R. McAdams Company, Inc.
621 Hillsborough Street
Suite 500
Raleigh, NC 27603
phone 919. 361. 5000
fax 919. 361. 2269
license number: C-0293, C-187
www.mcadamsco.com

CLIENT

HALLE BUILDING GROUP
56 HUNTER STREET, STE. 110
APEX, NC 27502
ERIC RIFKIN
PHONE: 919. 387. 1885

5000 LOUISBURG ROAD
ADMINISTRATIVE SITE REVIEW
5000 LOUISBURG ROAD
RALEIGH, NC

[redacted]

REVISIONS

NO.	DATE
1	
2	
3	
4	
5	
6	

PLAN INFORMATION

PROJECT NO.	HLE-23002
FILENAME	HLE23002-ASR-D1
CHECKED BY	JCM
DRAWN BY	RJF/SJB
SCALE	NTS
DATE	02. 09. 2024

SHEET

SITE DETAILS

C8.00

M:\Projects\HLE\HLE23002\04-Production\Engineering\Production Drawings\Current Drawings\Administrative Site Review\HLE23002-ASR-D1.dwg, 2/9/2024 4:31:03 PM, Savana Bennett

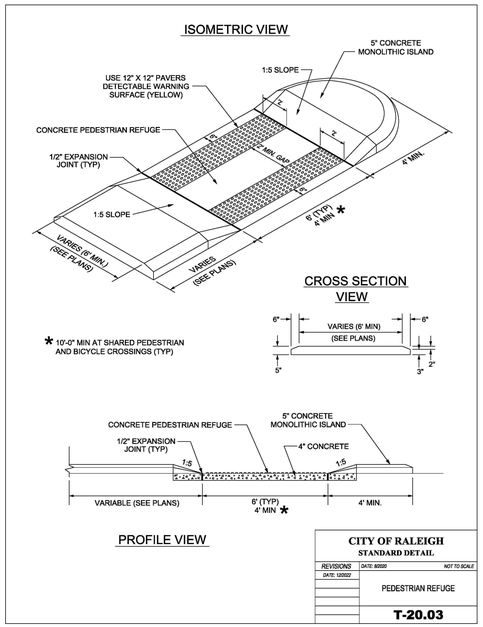

CITY OF RALEIGH
STANDARD DETAIL

REVISIONS	DATE: 8/05/20	NOT TO SCALE
DATE: 5/20/22	PEDESTRIAN REFUGE	
	T-20.03	

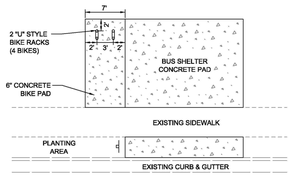

TYPICAL BIKE PAD LAYOUT
NTS

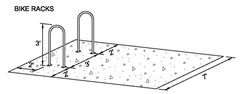

BIKE RACK SCHEMATIC

NOTES:
1. BIKE RACK TO BE 2" SCHEDULE 40 STEEL POWDER COATED BLACK.
2. COORDINATE LOCATION WITH THE CITY PRIOR TO INSTALLATION.

CITY OF RALEIGH
STANDARD DETAIL

REVISIONS	DATE: 8/05/20	NOT TO SCALE
	SITE LAYOUT FOR BIKE PAD	
	TT-10	

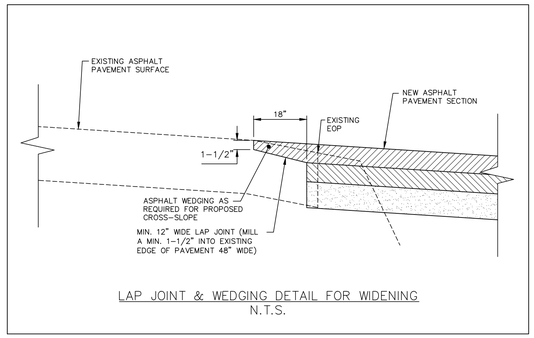

LAP JOINT & WEDGING DETAIL FOR WIDENING
N.T.S.

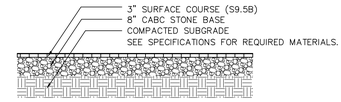

*SUBGRADE SHALL BE VOID OF HIGHLY PLASTIC CLAYS WITHIN THE TOP 12" AND SHALL BE COMPACTED TO 98% OF THE MDD (STD PROCTOR)

STANDARD DUTY PAVEMENT DETAIL (PARKING STALLS)

CONTRACTOR SHALL PLACE BINDER COURSE DURING CONSTRUCTION, THEN PLACE SURFACE COURSE AFTER BUILDING AND SITE CONSTRUCTION.

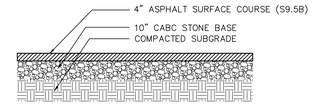

*SUBGRADE SHALL BE VOID OF HIGHLY PLASTIC CLAYS WITHIN THE TOP 12" AND SHALL BE COMPACTED TO 98% OF THE MDD (STD PROCTOR)

HEAVY DUTY PAVEMENT DETAIL

ASPHALT PAVEMENT DETAIL
N.T.S.

NOTE: A FINAL GEOTECHNICAL RECOMMENDATION FOR ASPHALT/RIGID PAVEMENT SECTIONS SHALL BE OBTAINED PRIOR TO CONSTRUCTION DRAWING APPROVAL. THESE SECTIONS ARE PRELIMINARY AND SHALL BE CONFIRMED BY A LICENSED GEOTECHNICAL ENGINEER.

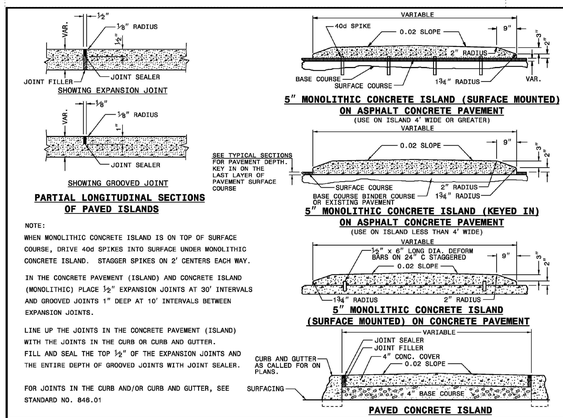

NOTE:
WHEN MONOLITHIC CONCRETE ISLAND IS ON TOP OF SURFACE COURSE, DRIVE 40d SPIKES INTO SURFACE UNDER MONOLITHIC CONCRETE ISLAND. STAGGER SPIKES ON 2' CENTERS EACH WAY.

IN THE CONCRETE PAVEMENT (ISLAND) AND CONCRETE ISLAND (MONOLITHIC) PLACE 1/2" EXPANSION JOINTS AT 30' INTERVALS AND GROOVED JOINTS 1" DEEP AT 10' INTERVALS BETWEEN EXPANSION JOINTS.

LINE UP THE JOINTS IN THE CONCRETE PAVEMENT (ISLAND) WITH THE JOINTS IN THE CURB OR CURB AND GUTTER. FILL AND SEAL THE TOP 3/4" OF THE EXPANSION JOINTS AND THE ENTIRE DEPTH OF GROOVED JOINTS WITH JOINT SEALER.

FOR JOINTS IN THE CURB AND/OR CURB AND GUTTER, SEE STANDARD NO. 846.01

I-24 STATE OF NORTH CAROLINA DEPT. OF TRANSPORTATION DIVISION OF HIGHWAYS RALEIGH, N.C.

ROADWAY STANDARD DRAWING FOR
CONCRETE ISLANDS

SHEET 1 OF 1
852.01

SEE SHEET C6.00 FOR ALL PROJECT, SITE, GRADING, STORM DRAINAGE AND UTILITY NOTES

ALL CONSTRUCTION SHALL BE IN ACCORDANCE WITH THE CURRENT CITY OF RALEIGH AND NCDOT (WHERE APPLICABLE) ENGINEERING DESIGN AND CONSTRUCTION STANDARDS

PRELIMINARY DRAWING - NOT RELEASED FOR CONSTRUCTION

MCADAMS
The John R. McAdams Company, Inc.
621 Hillsborough Street
Suite 500
Raleigh, NC 27603
phone 919. 361. 5000
fax 919. 361. 2269
license number: C-0293, C-187
www.mcadamsco.com

CLIENT

HALLE BUILDING GROUP
56 HUNTER STREET, STE. 110
APEX, NC 27502
ERIC RIFKIN
PHONE: 919. 387. 1885

5000 LOUISBURG ROAD
ADMINISTRATIVE SITE REVIEW
5000 LOUISBURG ROAD
RALEIGH, NC

[redacted]

REVISIONS

NO.	DATE
1	
2	
3	
4	
5	
6	

PLAN INFORMATION

PROJECT NO.	HLE-23002
FILENAME	HLE23002-ASR-D1
CHECKED BY	JCM
DRAWN BY	RJF/SJB
SCALE	NTS
DATE	02. 09. 2024

SHEET

SITE DETAILS

C8.01

M:\Projects\HLE\HLE23002\04-Production\Engineering\Production Drawings\Current Drawings\Administrative Site Review\HLE23002-ASR-01.dwg, 2/9/2024 4:31:14 PM, Savana Bennett

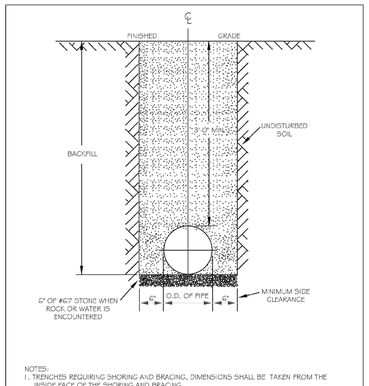

NOTES:
1. TRENCHES REQUIRING SHORING AND BRACING, DIMENSIONS SHALL BE TAKEN FROM THE INSIDE FACE OF THE SHORING AND BRACING.
2. NO ROCKS OR BOULDERS 4" OR LARGER TO BE USED IN BACKFILL.
3. ALL BACKFILL MATERIAL SHALL BE SUITABLE NATIVE MATERIAL.
4. BACKFILL SHALL BE TAMPED IN 6" LIFTS.
5. ACHIEVE 95% COMPACTION IN BACKFILL.

CITY OF RALEIGH
DEPARTMENT OF PUBLIC UTILITIES
TRENCH BOTTOM DIMENSIONS & BACKFILLING REQUIREMENTS FOR DUCTILE IRON

DWG. NO.	REVISIONS	DATE	REVISIONS	DATE
W-3	D.W.C.	9-3-99	ABB	2-19-03
	RKH	3-3-00	J.P.S.	10-29-10

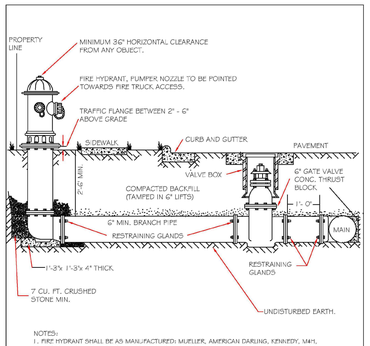

NOTES:
1. FIRE HYDRANT SHALL BE AS MANUFACTURED: MUELLER, AMERICAN DARLING, KENNEDY, M&H, WATEROUS, CLOW, EAST JORDAN IRON WORKS, OR US PIPE.
2. BRANCH PIPE SHALL BE DUCTILE IRON: AWWA C150/A21.50
3. 6" GATE VALVE SHALL BE AWWA C500-06 OPEN LEFT
4. STEEL RODS AND BOLTS SHALL BE #1 HOT DIPPED GALVANIZED
5. FIRE HYDRANTS WILL BE INSTALLED IN TRUE VERTICAL POSITION
RODS SHALL NOT BE COUPLED MORE THAN ONCE. IF THE LENGTH FROM THE VALVE TO THE HYDRANT EXCEEDS 20' THEN A MECHANICAL RESTRAINING GLAND WITH A REBAR CAGE SHALL BE INSTALLED NO MORE THAN 10' FROM HYDRANT AND POURED IN CONCRETE.
FIRE HYDRANTS TO BE LOCATED IN ROW OR 2 FOOT EASEMENT ADJACENT TO ROW

ANYTIME SITE WORK, CONSTRUCTION, ROAD WORK, OR ANY OTHER WORK CHANGES THE GRADE OF THE FIRE HYDRANT, THE PERSON RESPONSIBLE FOR THE WORK IS RESPONSIBLE FOR ADJUSTING THE FIRE HYDRANT TO STAY WITHIN COMPLIANCE.

CITY OF RALEIGH
DEPARTMENT OF PUBLIC UTILITIES
STANDARD FIRE HYDRANT INSTALLATION DETAIL

DWG. NO.	REVISIONS	DATE	REVISIONS	DATE
W-4	ABB	4-6-04	FAP	2/17/09
	DHL	01/14/08		

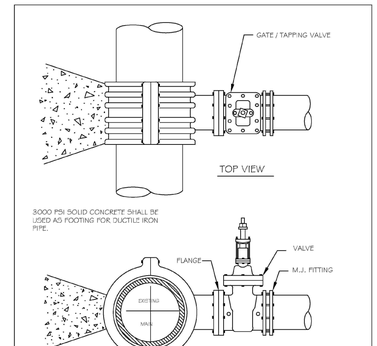

NOTES:
1. CONCRETE SHALL NOT CONTACT BOLTS OR ENDS OF MECHANICAL JOINT FITTINGS.
2. SEE STANDARD REACTION BLOCK TABLES, W-10 AND W-11 FOR AREA OF CONCRETE REQUIRED.

CITY OF RALEIGH
DEPARTMENT OF PUBLIC UTILITIES
4" - 24" STANDARD TAPPING SLEEVE AND VALVE ASSEMBLY

DWG. NO.	REVISIONS	DATE	REVISIONS	DATE
W-14	Y.C.A.	2-21-91	RRH	3-31-00
	D.W.C.	9-7-99	J.P.S.	11-1-10

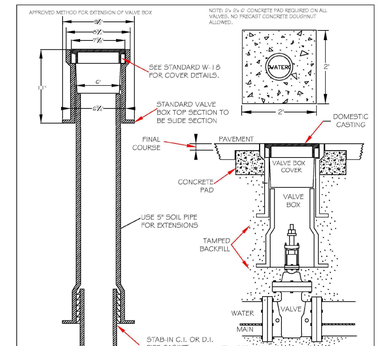

NOTES:
1) VALVE BOX NOT TO CONTACT WATER MAIN
2) ALL TRAFFIC CASTINGS MUST BE CLASS 35 OR GREATER.
3) FOR ANY VALVES OVER, 10 DEEP, A VALVE STEM EXTENSION MUST BE USED TO BRING TO A DEPTH OF NO MORE THAN 5'. EXTENSION MUST BE A MINIMUM OF 1-1/2OUS STOCK.
4) TOTAL VALVE BOX WEIGHT: MIN MUM OF 65 LBS.

CITY OF RALEIGH
DEPARTMENT OF PUBLIC UTILITIES
VALVE BOX INSTALLATION AND EXTENSION DETAIL

DWG. NO.	REVISIONS	DATE	REVISIONS	DATE
W-17	D.W.C.	9-7-99	A.B.B.	4-19-04
	RKH	3-3-00	DHL	6-16-07

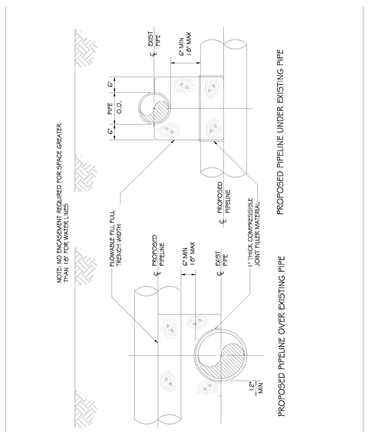

CITY OF RALEIGH
DEPARTMENT OF PUBLIC UTILITIES
CONCRETE CRADLE PROTECTION FOR WATER LINE CROSSINGS

DWG. NO.	REVISIONS	DATE	REVISIONS	DATE
W-41	DHL	2-20-08		

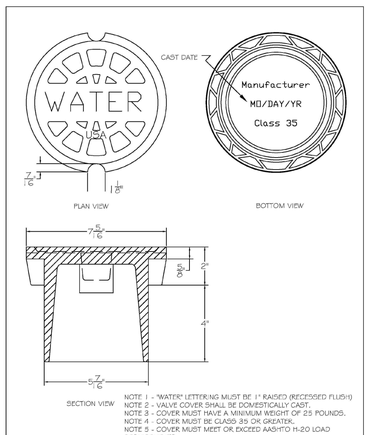

NOTE 1 - "WATER" LETTERING MUST BE 1" RAISED (RECESSED FLUSH)
NOTE 2 - VALVE COVER SHALL BE DOMESTICALLY CAST.
NOTE 3 - COVER MUST HAVE A MINIMUM WEIGHT OF 25 POUNDS.
NOTE 4 - COVER MUST BE CLASS 35 OR GREATER.
NOTE 5 - COVER MUST MEET OR EXCEED AASHTO H-20 LOAD REQUIREMENTS.

CITY OF RALEIGH
DEPARTMENT OF PUBLIC UTILITIES
5 1/4" VALVE BOX DROP LID WITH 4" SKIRT

DWG. NO.	REVISIONS	DATE	REVISIONS	DATE
W-18				

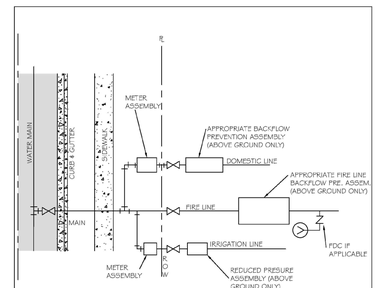

1. SERVICE TAPS FOR 2" AND SMALLER DOMESTIC SERVICES MAY BE BY CORPORATION COCKS. LARGER SERVICES WILL REQUIRE A TEE AND GATE VALVE OR TAPPING SLEEVE AND VALVE ASSEMBLY AND 90° BEND.
2. DOMESTIC SERVICE TAPS SHALL BE ALLOWED ONLY ON 6" OR LARGER FIRE LINES BEFORE THE BACKFLOW ASSEMBLY.
3. ONE DOMESTIC TAP PER FIRE LINE ON STREET SIDE OF BACKFLOW. 4. FIRE LINE SHALL HAVE A FIRE HYDRANT OR BLOW OFF ASSEMBLY AT ITS END TO FACILITATE FLUSHING WHEN NEEDED.
5. IRRIGATION METER SHALL BE LOCATED ON THE SIDE OF DOMESTIC METER WITH INCREASING ADDRESSES.
6. THE BACKFLOW SHALL BE INSTALLED NO MORE THAN 10' FROM THE METER IN A VISIBLE LOCATION.
7. DOMESTIC/IRRIGATION BACKFLOW RISER/STANDPIPE SHALL BE OF COPPER OR BRASS.
8. THE RP RELIEF VALVE SHALL BE A MINIMUM OF 12" ABOVE ANY MATERIAL (MULCH INCLUDED) OR GRADE.
9. A SERVICE VALVE IS REQUIRED AFTER THE METER BUT BEFORE THE BACKFLOW ASSEMBLY FOR MAINTENANCE AND REPLACEMENT PURPOSES.
10. THE INSTALLATION MUST ALSO MEET ALL CODE REQUIREMENTS PER THE NC PLUMBING CODE.

CITY OF RALEIGH
DEPARTMENT OF PUBLIC UTILITIES
FIRE, DOMESTIC & IRRIGATION OPTIONS SCHEMATIC

DWG. NO.	REVISIONS	DATE	REVISIONS	DATE
W-34	D.W.C.	11-18-99	A.B.B.	7-10-04
	RKH	3-31-00	D.H.L.	2/15/08

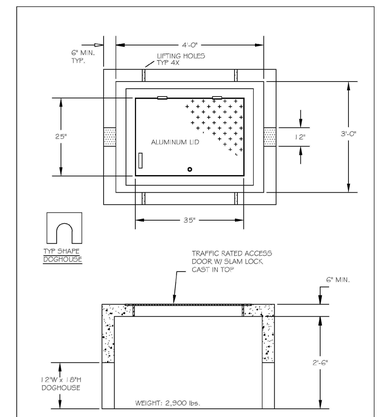

NOTES:
1) REINFORCEMENT: #4 @ 6" OCEW
2) CONCRETE: 4,000 PSI @ 28 DAYS
3) 6" OF #67 STONE SHALL BE PLACED IN BOTTOM OF VAULT
4) METER FLANGE SHALL BE PLACED 42" BELOW FINISHED GRADE

CITY OF RALEIGH
DEPARTMENT OF PUBLIC UTILITIES
TYPICAL 4" WATER METER VAULT

DWG. NO.	REVISIONS	DATE	REVISIONS	DATE
W-32	A.B.B.	6-26-04		
	D.H.L.	6-15-06		

SEE SHEET C6.00 FOR ALL PROJECT, SITE, GRADING, STORM DRAINAGE AND UTILITY NOTES

ALL CONSTRUCTION SHALL BE IN ACCORDANCE WITH THE CURRENT CITY OF RALEIGH AND NCDOT (WHERE APPLICABLE) ENGINEERING DESIGN AND CONSTRUCTION STANDARDS

PRELIMINARY DRAWING - NOT RELEASED FOR CONSTRUCTION

MCADAMS
The John R. McAdams Company, Inc.
621 Hillsborough Street
Suite 500
Raleigh, NC 27603
phone 919. 361. 5000
fax 919. 361. 2269
license number: C-0293, C-187
www.mcadamsco.com

CLIENT

HALLE BUILDING GROUP
56 HUNTER STREET, STE. 110
APEX, NC 27502
ERIC RIFKIN
PHONE: 919. 387. 1885

5000 LOUISBURG ROAD
ADMINISTRATIVE SITE REVIEW
5000 LOUISBURG ROAD
RALEIGH, NC

[redacted]

REVISIONS

NO.	DATE
1	
2	
3	
4	
5	
6	

PLAN INFORMATION

PROJECT NO.	HLE-23002
FILENAME	HLE23002-ASR-D1
CHECKED BY	JCM
DRAWN BY	RJF/SJB
SCALE	NTS
DATE	02. 09. 2024

SHEET

WATER DETAILS

C8.02

M:\Projects\HLE\HLE23002\04-Production\Engineering\Production Drawings\Current Drawings\Administrative Site Review\HLE23002-ASR-01.dwg, 2/9/2024 4:31:24 PM, Savana Bennett

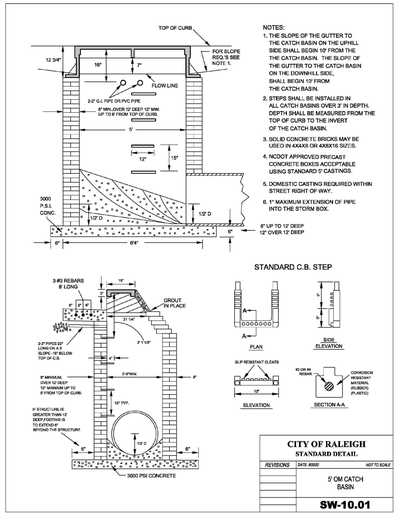

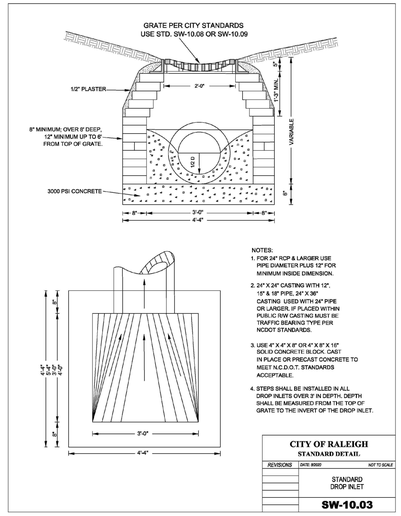

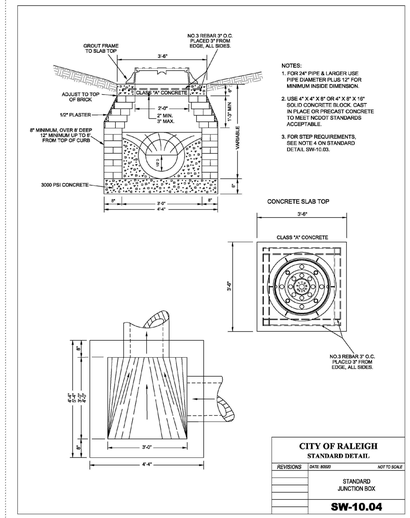

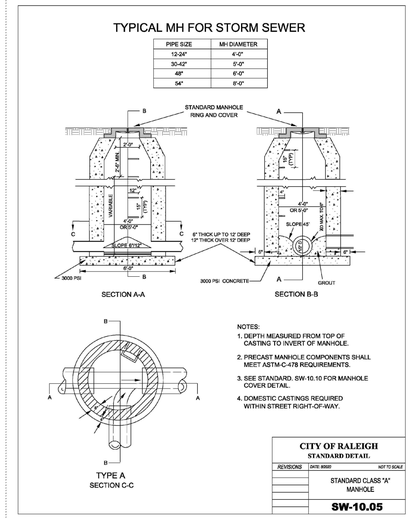

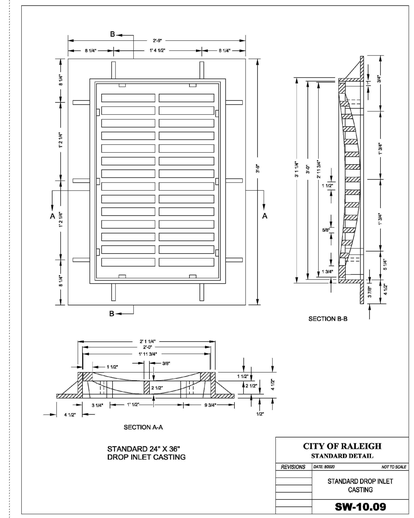

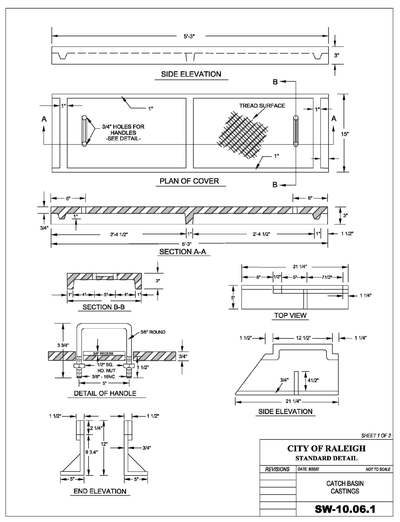

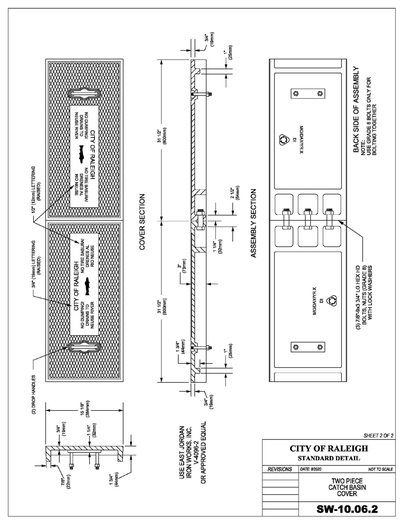

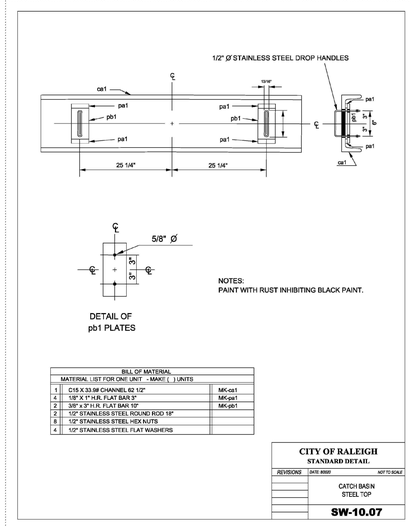

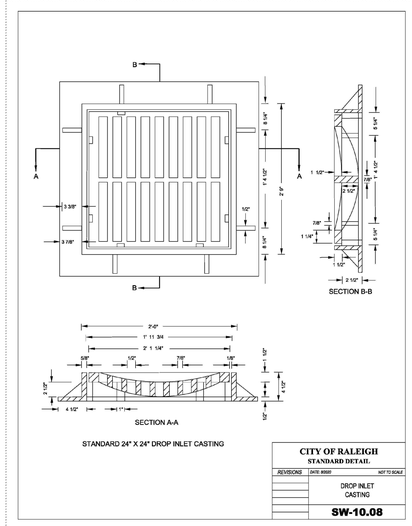

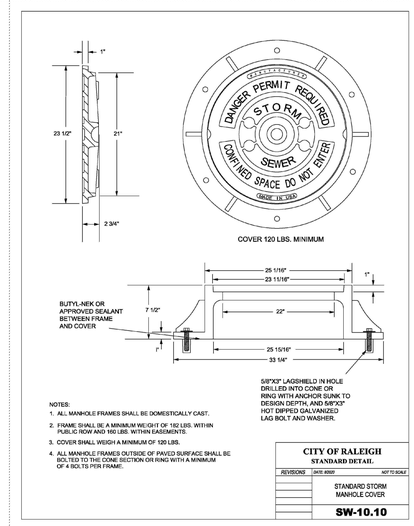

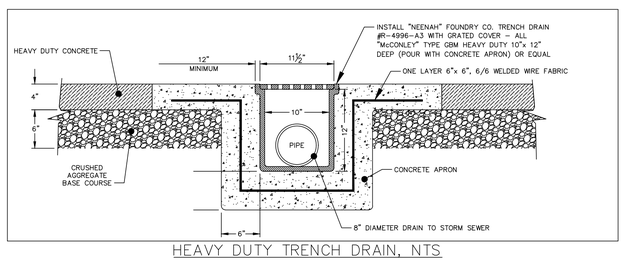

HEAVY DUTY TRENCH DRAIN, NTS

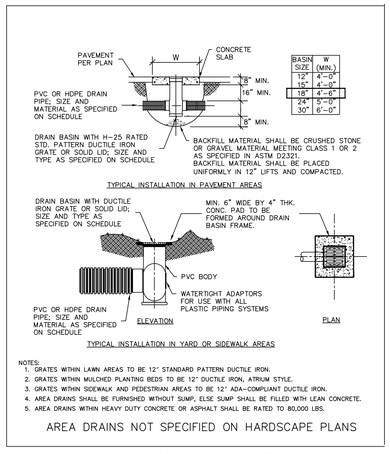

BASIN SIZE	W (MIN.)
12"	4'-0"
15"	4'-0"
18"	4'-6"
24"	5'-0"
30"	6'-0"

AREA DRAIN, NTS

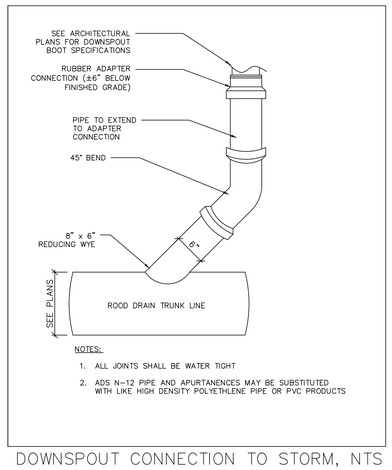

DOWNSPOUT CONNECTION TO STORM, NTS

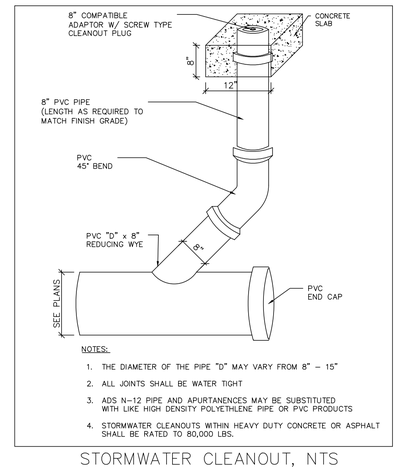

STORMWATER CLEANOUT, NTS

SEE SHEET C6.00 FOR ALL PROJECT, SITE, GRADING, STORM DRAINAGE AND UTILITY NOTES

ALL CONSTRUCTION SHALL BE IN ACCORDANCE WITH THE CURRENT CITY OF RALEIGH AND NCDOT (WHERE APPLICABLE) ENGINEERING DESIGN AND CONSTRUCTION STANDARDS

PRELIMINARY DRAWING - NOT RELEASED FOR CONSTRUCTION

McADAMS
The John R. McAdams Company, Inc.
621 Hillsborough Street
Suite 500
Raleigh, NC 27603
phone 919. 361. 5000
fax 919. 361. 2269
license number: C-0293, C-187
www.mcadamsco.com

CLIENT

HALLE BUILDING GROUP
56 HUNTER STREET, STE. 110
APEX, NC 27502
ERIC RIFKIN
PHONE: 919. 387. 1885

5000 LOUISBURG ROAD
ADMINISTRATIVE SITE REVIEW
5000 LOUISBURG ROAD
RALEIGH, NC

[redacted]

REVISIONS

NO.	DATE
1	
2	
3	
4	
5	
6	

PLAN INFORMATION

PROJECT NO.	HLE-23002
FILENAME	HLE23002-ASR-D1
CHECKED BY	JCM
DRAWN BY	RJF/SJB
SCALE	NTS
DATE	02. 09. 2024

SHEET

STORM DRAINAGE DETAILS

C8.03

M:\Projects\HLE\HLE23002\04-Production\Engineering\Production Drawings\Current Drawings\Administrative Site Review\HLE23002-ASR-D1.dwg, 2/9/2024 4:31:34 PM, Savana Bennett

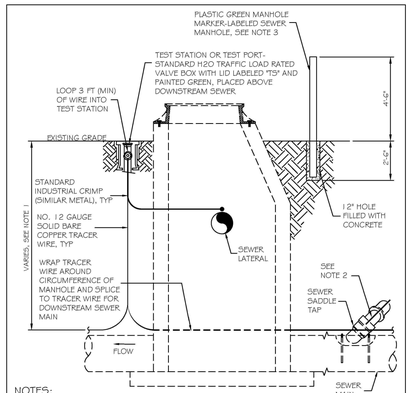

NOTES:

1. THE TRACER WIRE SHALL BE CONTINUOUS TO THE GREATEST EXTENT POSSIBLE. FOR GRAVITY MAIN AND OR LATERAL INSTALLATIONS LESS THAN 8 FT, THE TRACING WIRE SHALL BE ATTACHED TO THE PIPE. TRACER WIRE SHALL BE LAID FLAT AND SECURELY AFFIXED TO THE PIPE AT 10 FOOT INTERVALS. FOR GRAVITY MAIN AND OR LATERAL INSTALLATION DEEPER THAN 8 FT, THE TRACING WIRE SHALL BE INSTALLED AT A DEPTH OF 7-8 FT. THE WIRE SHALL BE PROTECTED FROM DAMAGE DURING THE EXECUTION OF THE WORK. NO BREAKS OF CUTS IN THE TRACER WIRE SHALL BE PERMITTED.
2. WHERE LATERAL TAPS ARE MADE BY SERVICE SADDLES, THE TRACER WIRE SHALL NOT BE ALLOWED TO TO BE PLACED BETWEEN THE SADDLE AND MAIN.
3. MANHOLE MARKERS SHALL BE PLACED ADJACENT TO MANHOLES AT THE DISCRETION OF OWNER OR OWNER'S REPRESENTATIVE.

CITY OF RALEIGH
DEPARTMENT OF PUBLIC UTILITIES
GRAVITY SEWER MAIN TRACER WIRE AND MANHOLE MARKER

DWG. NO.	REVISIONS	DATE	REVISIONS	DATE
S-20A	WKD	08-14		

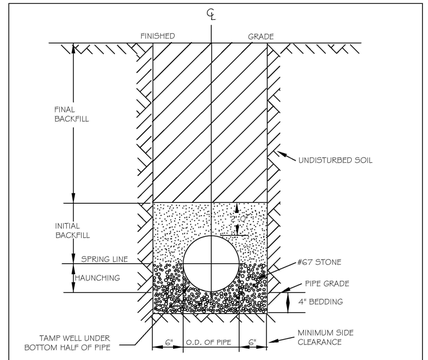

TYPICAL TRENCH BOTTOM DIMENSIONS FOR SDR 35 PVC GRAVITY PIPE

NOTES:
1. FOR TRENCHES REQUIRING SHORING AND BRACING, DIMENSIONS SHALL BE TAKEN FROM THE INSIDE FACE OF THE SHORING AND BRACING.
2. NO ROCKS OR BOULDERS 4" OR LARGER TO BE USED IN INITIAL BACKFILL.
3. ALL BACKFILL MATERIAL SHALL BE SUITABLE NATIVE MATERIAL.
4. BACKFILL SHALL BE TAMPED IN 6" LIFTS IN TRAFFIC AREAS, 12" IN NON-TRAFFIC AREAS.

CITY OF RALEIGH
DEPARTMENT OF PUBLIC UTILITIES
TRENCH BOTTOM DIMENSIONS AND BACKFILLING REQUIREMENTS FOR PVC GRAVITY SEWER MAIN

DWG. NO.	REVISIONS	DATE	REVISIONS	DATE
S-5	TO NOTES	3-1-87	D.W.C.	9-3-99
		7-2-02	RRH	3-30-00

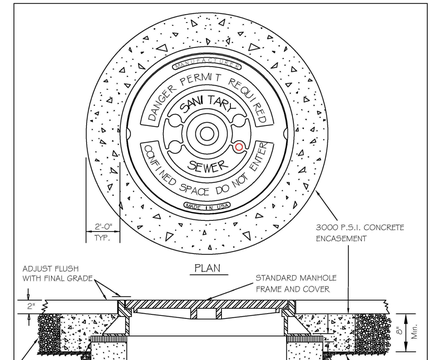

CITY OF RALEIGH
DEPARTMENT OF PUBLIC UTILITIES
STANDARD MANHOLE FRAME AND COVER DETAIL WITHIN PAVED SURFACES

DWG. NO.	REVISIONS	DATE	REVISIONS	DATE
S-29	Y.C.A.	12-31-93	ABB	9-20-04
	RRH	3-30-00	DHL	11-29-07

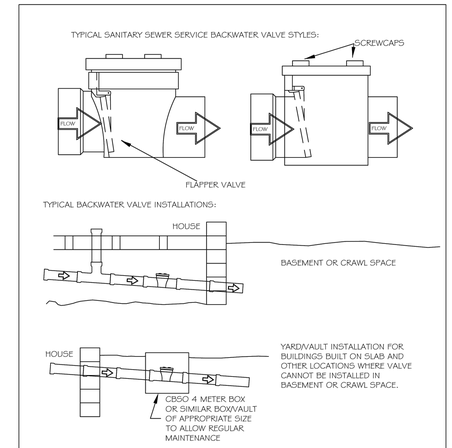

NOTES:

1. INSTALLATIONS OF GREATER THAN 4' IN DEPTH MAY REQUIRE MANHOLE.
2. VALVES MUST BE INSTALLED IN A LOCATION AT WHICH THEY CAN BE CLEANED AND SERVICED REGULARLY.

CITY OF RALEIGH
DEPARTMENT OF PUBLIC UTILITIES
TYPICAL SANITARY SEWER SERVICE BACK-WATER VALVE INSTALLATION

DWG. NO.	REVISIONS	DATE	REVISIONS	DATE
S-38	RRH	3-31-00		

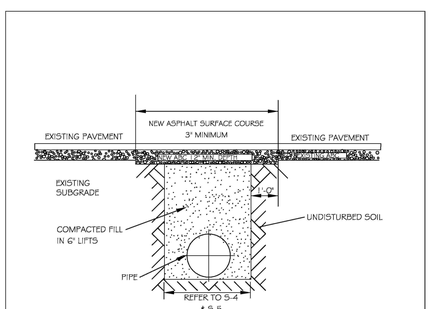

NOTES:
1. IN NCDOT MAINTAINED ROADWAYS ENCROACHMENT PAVEMENT PATCH REQUIREMENTS SHALL TAKE PRECEDENCE.
2. THE PAVEMENT CUT SHALL BE DEFINED BY A STRAIGHT EDGE AND CUT WITH AN APPROPRIATE SAWCUT MACHINE.
3. THE TRENCH SUBGRADE MATERIAL SHALL BE BACKFILLED WITH SUITABLE MATERIAL AND COMPACTED TO A DENSITY OF AT LEAST 95% OF THAT OBTAINED BY COMPACTING A SAMPLE OF THE MATERIAL IN ACCORDANCE WITH AASHTO T-99 AS MODIFIED BY NCDOT.
4. THE FINAL 1' OF FILL SHALL CONSIST OF ABC MATERIAL COMPACTED TO A DENSITY EQUAL TO 100% OF THAT OBTAINED BY COMPACTING A SAMPLE OF THE MATERIAL IN ACCORDANCE WITH AASHTO T-80 AS MODIFIED BY NCDOT.
5. THE ENTIRE THICKNESS AND VERTICAL EDGE OF CUT SHALL BE TACKED.
6. THE SAME DEPTH OF PAVEMENT MATERIAL WHICH EXISTS SHALL BE REINSTALLED, BUT IN NO CASE SHALL THE ASPHALT BE LESS THAN 3" THICK.
7. THE ASPHALT PAVEMENT MATERIAL SHALL BE INSTALLED AND COMPACTED THOROUGHLY WITH A SMOOTH DRUM ROLLER TO ACHIEVE A SMOOTH LEVEL PATCH.
8. REFER TO CITY OF RALEIGH STANDARDS FOR TRENCHES AND PIPE BEDDING (S-4 & S-5) FOR ADDITIONAL DETAILS.
9. NO HAND PATCHING ALLOWED.
10. PAVEMENT CUTS WITHIN NCDOT ROW SHALL CONFORM TO THE APPROVED ON SITE ENCROACHMENT PERMIT.

CITY OF RALEIGH
DEPARTMENT OF PUBLIC UTILITIES
STANDARD ASPHALT PAVEMENT PATCH DETAIL

DWG. NO.	REVISIONS	DATE	REVISIONS	DATE
S-3	D.W.C.	11-1-99	A.B.B.	4-19-04
	RRH	3-30-00	J.P.S.	10-8-10

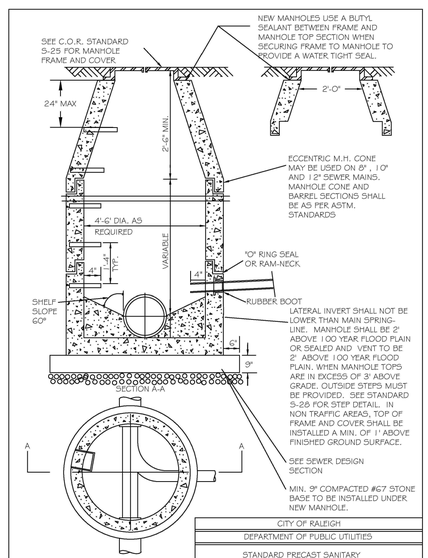

CITY OF RALEIGH
DEPARTMENT OF PUBLIC UTILITIES
STANDARD PRECAST SANITARY SEWER MANHOLE

DWG. NO.	REVISIONS	DATE	REVISIONS	DATE
S-20	Y.C.A.	12-31-92	ABB	2-21-05
	RRH	3-30-00	D.H.L.	6-16-08

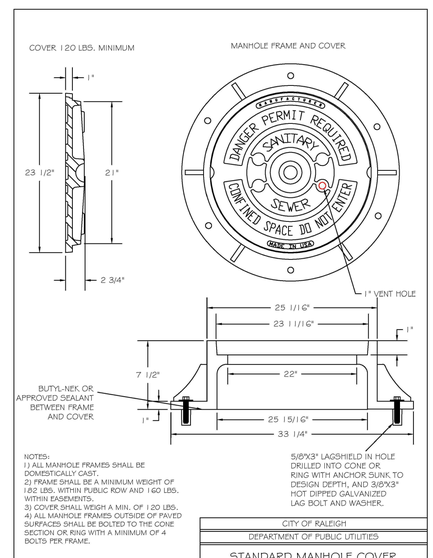

NOTES:
1) ALL MANHOLE FRAMES SHALL BE DOMESTICALLY CAST.
2) FRAME SHALL BE A MINIMUM WEIGHT OF 182 LBS. WITHIN PUBLIC ROW AND 160 LBS. WITHIN EASEMENTS.
3) COVER SHALL WEIGH A MIN. OF 120 LBS.
4) ALL MANHOLE FRAMES OUTSIDE OF PAVED SURFACES SHALL BE BOLTED TO THE CONE SECTION OR RING WITH A MINIMUM OF 4 BOLTS PER FRAME.

5/8"X3" LAGSHIELD IN HOLE DRILLED INTO CONE OR RING WITH ANCHOR SUNK TO DESIGN DEPTH, AND 5/8"X3" HOT DIPPED GALVANIZED LAG BOLT AND WASHER.

CITY OF RALEIGH
DEPARTMENT OF PUBLIC UTILITIES
STANDARD MANHOLE COVER

DWG. NO.	REVISIONS	DATE	REVISIONS	DATE
S-25	3-1-87	3-1-87	A.B.B.	2-9-05
	RRH	3-30-00	D.H.L.	6-18-08

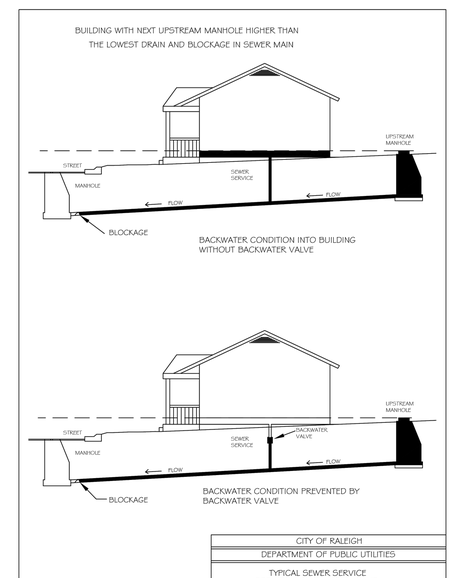

CITY OF RALEIGH
DEPARTMENT OF PUBLIC UTILITIES
TYPICAL SEWER SERVICE REQUIRING BACKWATER VALVE

DWG. NO.	REVISIONS	DATE	REVISIONS	DATE
S-42	RRH	3-31-00		

SEE SHEET C6.00 FOR ALL PROJECT, SITE, GRADING, STORM DRAINAGE AND UTILITY NOTES

ALL CONSTRUCTION SHALL BE IN ACCORDANCE WITH THE CURRENT CITY OF RALEIGH AND NCDOT (WHERE APPLICABLE) ENGINEERING DESIGN AND CONSTRUCTION STANDARDS

PRELIMINARY DRAWING - NOT RELEASED FOR CONSTRUCTION

McADAMS
The John R. McAdams Company, Inc.
621 Hillsborough Street
Suite 500
Raleigh, NC 27603
phone 919. 361. 5000
fax 919. 361. 2269
license number: C-0293, C-187
www.mcadamsco.com

CLIENT

HALLE BUILDING GROUP
56 HUNTER STREET, STE. 110
APEX, NC 27502
ERIC RIFKIN
PHONE: 919. 387. 1885

5000 LOUISBURG ROAD
ADMINISTRATIVE SITE REVIEW
5000 LOUISBURG ROAD
RALEIGH, NC

[redacted]

REVISIONS

NO.	DATE
1	
2	
3	
4	
5	
6	

PLAN INFORMATION

PROJECT NO.	HLE-23002
FILENAME	HLE23002-ASR-D1
CHECKED BY	JCM
DRAWN BY	RJF/SJB
SCALE	NTS
DATE	02. 09. 2024

SHEET

SANITARY SEWER DETAILS

C8.04

M:\Projects\HLE\HLE23002\04-Production\Engineering\Production Drawings\Current Drawings\Administrative Site Review\HLE23002-ASR-D1.dwg, 2/9/2024 4:31:44 PM, Savana Bennett

LANDSCAPE CALCULATIONS

STREET TREES

LOUISBURG ROAD 491.0 LF*

UNDERSTORY TREES
REQUIRED: 25 (1/20 LF)
PROVIDED: 25

KYLE DRIVE 546.56 LF*

TREES
REQUIRED: 14 (1/40 LF)
PROVIDED: 14

* STREET TREE CALCULATIONS EXCLUDE THE PORTIONS OF FRONTAGE WITHIN THE EXISTING DUKE POWER RIGHT-OF-WAY, DRIVE AISLES, FIRE LANES, THE EXISTING SANITARY SEWER EASEMENT, AND THE NEUSE RIVER RIPARIAN BUFFER.

PERIMETER BUFFERS

LOUISBURG ROAD 307.61 LF**
25' TYPE 'C2'

SHADE TREES
REQUIRED: 13 (4/100 LF)
PROVIDED 13

SHRUBS
REQUIRED: 47 (15/100 LF)
PROVIDED: 53

** PERIMETER BUFFER CALCULATIONS EXCLUDE THE PORTIONS OF FRONTAGE WITHIN THE EXISTING DUKE POWER RIGHT-OF-WAY, DRIVE AISLES, FIRE LANES, THE EXISTING SANITARY SEWER EASEMENT, AND THE NEUSE RIVER RIPARIAN BUFFER.

PARKING LOT

PARKING AREA 14,866 SF

SHADE TREES
REQUIRED: 8 (1/2,000 SF)
PROVIDED: 8

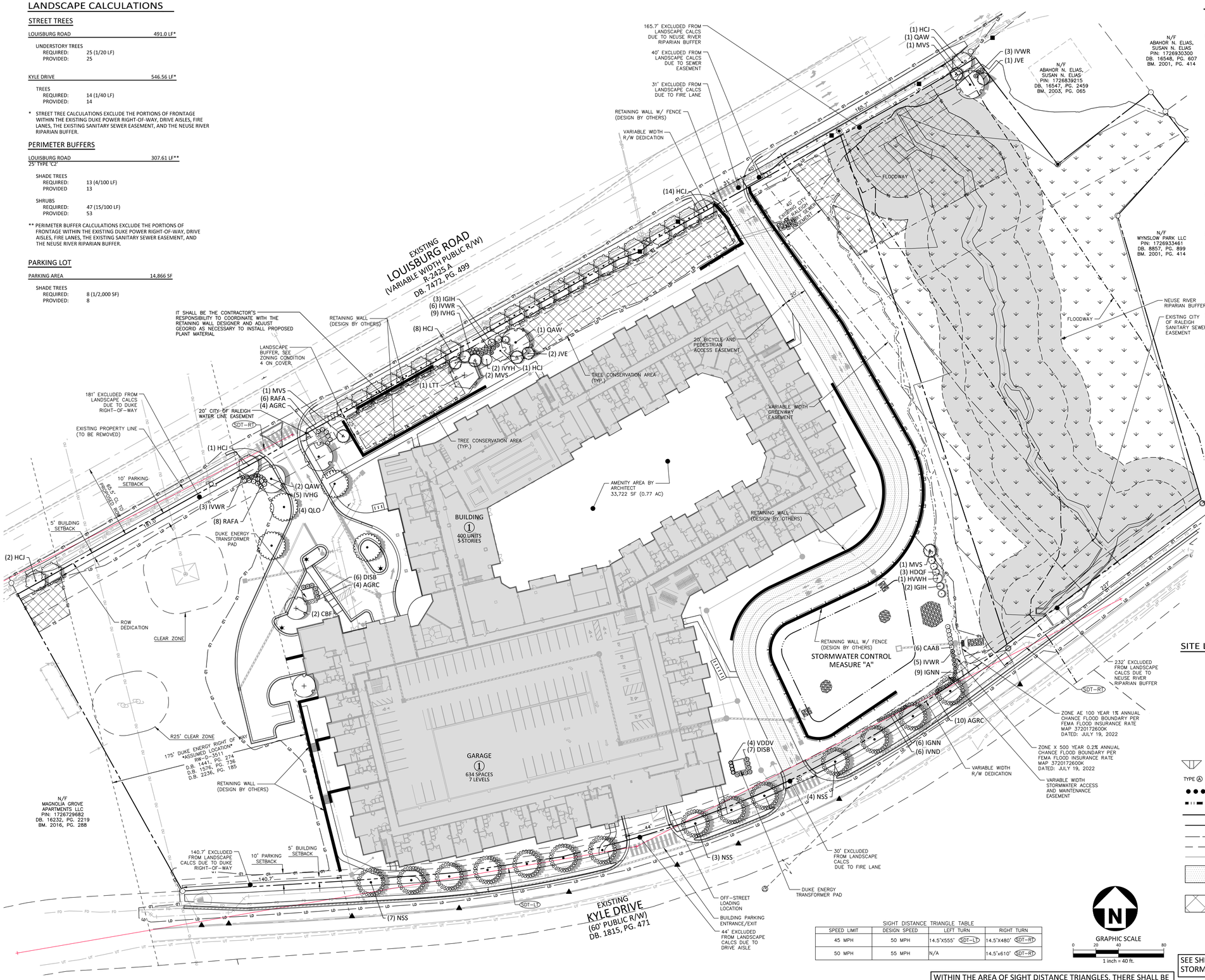

PLANT SCHEDULE

SYMBOL	CODE	BOTANICAL / COMMON NAME
CANOPY TREES		
	CBF	Carpinus betulus `Fastigiata` Pyramidal European Hornbeam
	LTT	Liriodendron tulipifera Tulip Tree
	NSS	Nyssa sylvatica Sour Gum
	QAW	Quercus alba White Oak
	QLO	Quercus lyrata Overcup Oak
EVERGREEN TREES		
	JVE	Juniperus virginiana Eastern Red Cedar
EVERGREEN UNDERSTORY TREES		
	MVS	Magnolia virginiana Sweet Bay
UNDERSTORY TREES		
	HCJ	Halesia carolina 'Jersey Belle' Jersey Belle Carolina Silverbell
SHRUBS		
	AGRC	Abelia x grandiflora `Rose Creek` Rose Creek Abelia
	DISB	Distylium x 'PIIDIST-II' Blue Cascade® Distylium
DECIDUOUS SHRUBS		
	CAAB	Callicarpa americana American Beautyberry
	HDQF	Hydrangea quercifolia Oakleaf Hydrangea
	HVWH	Hamamelis virginiana Common Witch Hazel
	IVHG	Itea virginica `Henry's Garnet` Henry's Garnet Sweetspire
EVERGREEN SHRUBS		
	IGIH	Ilex glabra Inkberry Holly
	IGNN	Ilex glabra `Nigra` Nigra Inkberry
	IVND	Ilex vomitoria `Nana` Dwarf Yaupon
	IVWR	Ilex verticillata `Winter Red` Winter Red Holly
	IVYH	Ilex vomitoria Yaupon Holly
	RAFA	Rhododendron azalea `Formosa` Azalea
	VDDV	Viburnum davidii David Viburnum

SITE LEGEND

- SIGNAGE
- YARD LIGHTS
- LIGHT POLE
- POWER POLE
- TRAFFIC DIRECTIONAL ARROW
- ACC — ACCESSIBLE PARKING STALL
- VAN — VAN ACCESSIBLE PARKING STALL
- XX — PARKING SPACE COUNT
- TYPE A, TYPE B, TYPE C — ACCESSIBLE RAMPS
- ACCESSIBLE ROUTE
- PHASE LINE
- PROPERTY LINE
- RIGHT-OF-WAY LINE
- LOT LINE
- EASEMENT LINE
- CENTERLINE
- HEAVY DUTY ASPHALT PAVEMENT
- TREE CONSERVATION AREA

SIGHT DISTANCE TRIANGLE TABLE

SPEED LIMIT	DESIGN SPEED	LEFT TURN	RIGHT TURN
45 MPH	50 MPH	14.5'X555' SDT-LT	14.5'X480' SDT-RT
50 MPH	55 MPH	N/A	14.5'x610' SDT-RT

GRAPHIC SCALE
0 20 40 80
1 inch = 40 ft.

WITHIN THE AREA OF SIGHT DISTANCE TRIANGLES, THERE SHALL BE NO SIGHT OBSTRUCTING OR PARTLY OBSTRUCTING WALL, FENCE, SIGN, FOLIAGE, BERMS, OR PARKED VEHICLES BETWEEN THE HEIGHTS OF 24 INCHES AND EIGHT FEET ABOVE THE CURB LINE ELEVATION OR THE NEAREST TRAVELED WAY IF NO CURBING EXISTS

SEE SHEET C6.00 FOR ALL PROJECT, SITE, GRADING, STORM DRAINAGE AND UTILITY NOTES

ALL CONSTRUCTION SHALL BE IN ACCORDANCE WITH THE CURRENT CITY OF RALEIGH AND NCDOT (WHERE APPLICABLE) ENGINEERING DESIGN AND CONSTRUCTION STANDARDS

PRELIMINARY DRAWING - NOT RELEASED FOR CONSTRUCTION

MCADAMS
The John R. McAdams Company, Inc.
621 Hillsborough Street
Suite 500
Raleigh, NC 27603
phone 919. 361. 5000
fax 919. 361. 2269
license number: C-0293, C-187
www.mcadamsco.com

CLIENT

HALLE BUILDING GROUP
56 HUNTER STREET, STE. 110
APEX, NC 27502
ERIC RIFKIN
PHONE: 919. 387. 1885

Halle BUILDING GROUP

5000 LOUISBURG ROAD
ADMINISTRATIVE SITE REVIEW
5000 LOUISBURG ROAD
RALEIGH, NC

[redacted]

REVISIONS

NO.	DATE
1	
2	
3	
4	
5	
6	

PLAN INFORMATION

PROJECT NO.	HLE-23002
FILENAME	HLE23002-ASR-LS1
CHECKED BY	SRD
DRAWN BY	KHW
SCALE	1" = 40'
DATE	02. 09. 2024

SHEET

LANDSCAPE PLAN

L5.00

M:\Projects\HLE\HLE23002\04-Production\Engineering\Production Drawings\Current Drawings\Administrative Site Review\HLE23002-ASR-LS1.dwg, 2/9/2024 4:32:11 PM, Savana Bennett

LANDSCAPE NOTES

1. MATERIALS AND METHODS OF CONSTRUCTION SHALL BE IN ACCORDANCE WITH CURRENT APPLICABLE CITY OF RALEIGH AND THE STATE OF NC STANDARDS AND SPECIFICATIONS.
2. CONTRACTOR IS RESPONSIBLE FOR INSPECTING THE SITE BEFORE LANDSCAPE CONSTRUCTION AND INSTALLATION IN ORDER TO BECOME FAMILIAR WITH THE EXISTING CONDITIONS.
3. CONTRACTOR IS RESPONSIBLE FOR LOCATING UNDERGROUND UTILITIES, NEW AND PRIOR EXISTING, BEFORE BEGINNING LANDSCAPE INSTALLATION. DAMAGE TO UTILITIES SHALL BE REPAIRED AT THE CONTRACTOR'S EXPENSE.
4. THE LANDSCAPE PLAN IS FOR PLANTING PURPOSES ONLY. FOR INFORMATION REGARDING BUILDINGS, GRADING, WALLS, ETC., REFER TO ARCHITECTURE, SITE, GRADING DRAWINGS, ETC.
5. CONTRACTOR SHALL FULLY REVIEW PLANS AND SPECIFICATIONS PRIOR TO INSTALLATION AND SHALL NOTIFY OWNER'S REPRESENTATIVE AND LANDSCAPE ARCHITECT OF DISCREPANCIES BETWEEN THE NOTES, SPECIFICATIONS, DRAWINGS, OR SITE CONDITIONS FOR RESOLUTION PRIOR TO INSTALLATION.
6. VERIFICATION OF TOTAL PLANT QUANTITIES AS SHOWN IN THE PLANT SCHEDULE SHALL BE THE RESPONSIBILITY OF THE CONTRACTOR. DISCREPANCIES BETWEEN THE PLANT SCHEDULE AND LANDSCAPE PLAN SHALL BE BROUGHT TO THE ATTENTION OF THE LANDSCAPE ARCHITECT PRIOR TO SUBMITTING THE BID/PROPOSAL.
7. CONTRACTOR IS RESPONSIBLE FOR VERIFYING THAT PLANT MATERIAL IS AVAILABLE AS SPECIFIED WHEN BID/PROPOSAL IS SUBMITTED AND RESERVING / SECURING PLANT MATERIAL AS NECESSARY TO MEET THE REQUIREMENTS OF THE LANDSCAPE PLAN.
8. PLANTS TO MEET MINIMUM REQUIREMENTS AS SPECIFIED IN THE PLANT SCHEDULE. ROOT TYPE MAY BE FREELY SUBSTITUTED FOR BALLED AND BURLAPPED OR CONTAINER GROWN TREES, WITH OTHER SPECIFICATIONS REMAINING UNCHANGED. OTHER CHANGES OR SUBSTITUTIONS SHALL BE APPROVED BY THE LANDSCAPE ARCHITECT AND GOVERNING JURISDICTION PRIOR TO PROCUREMENT OF PLANT MATERIAL.
9. DEVIATION FROM THESE PLANS MUST BE SPECIFICALLY APPROVED BY LANDSCAPE ARCHITECT. THE CONTRACTOR SHALL NOT MAKE SUBSTITUTIONS OR REVISIONS WITHOUT APPROVAL.
10. CONTRACTOR TO COORDINATE WITH LANDSCAPE ARCHITECT TO ESTABLISH THE EXTENTS OF MULCH/SEED/SOD IF NOT SPECIFICALLY SHOWN ON PLANS.
11. CONTRACTOR SHALL VERIFY CONDITIONS AND ELEVATIONS OF EXISTING TREES TO REMAIN ADJACENT TO OR WITHIN LIMITS OF DISTURBANCE PRIOR TO INSTALLATION OF NEW PLANT MATERIAL. CONTRACTOR SHALL NOTIFY LANDSCAPE ARCHITECT OF DISCREPANCIES.
12. CONTRACTOR SHALL BE RESPONSIBLE FOR THE TESTING, AMENDING AND SPREADING OF TOPSOIL PRIOR TO PLANT INSTALLATION, SUPPLEMENTING WITH AMENDMENTS TO ADJUST PH AND FERTILITY AS NECESSARY BASED ON THE TEST RESULTS. SEE SPECIFICATIONS FOR SOIL TEST REPORT SUBMITTAL REQUIREMENTS.
13. CONTRACTOR SHALL PREPARE PLANTING BEDS BY TILLING SOIL TO A 12" DEPTH PRIOR TO INSTALLING PLANT MATERIAL. CONTRACTOR SHALL ENSURE THAT SHALLOW BEDROCK WILL NOT INHIBIT THE ROOT GROWTH OF PLANT MATERIAL. PLANTING BEDS SHALL NOT BE BACKFILLED WITH ANY MATERIAL OTHER THAN AMENDED OR IMPORTED PLANTING SOIL IN ACCORDANCE WITH THE SPECIFICATIONS FOR PLANTING SOIL.
14. FINE GRADE PLANTING AREAS TO A SMOOTH, UNIFORM SURFACE PLANE WITH LOOSE, UNIFORMLY FINE TEXTURE. GRADE TO WITHIN PLUS OR MINUS 1/2 INCH OF FINISH ELEVATION. HAND ROLL AND RAKE, REMOVE RIDGES AND DEBRIS, AND FILL DEPRESSIONS TO MEET FINISH GRADES. LIMIT FINISHED GRADING TO AREAS THAT CAN BE PLANTED IN THE IMMEDIATE FUTURE.
15. CONTRACTOR SHALL PROVIDE POSITIVE DRAINAGE IN PLANTING AREAS.
16. AFTER TREE PLANTING HOLES HAVE BEEN DUG AND PRIOR TO INSTALLATION OF TREES, CONTRACTOR TO CONFIRM THAT WATER DRAINS OUT OF THE SOIL. USE LOWERED PLANTING HOLE DEPTH AND INSTALL ALTERNATIVE DRAINAGE AND AERATION SYSTEMS AS REQUIRED.
17. PERFORM PERCOLATION TEST FOR EACH TREE PIT. PROVIDE GRAVEL SUMP FILTER FABRIC & VENT PIPE IF DRAINAGE DOES NOT OCCUR WITHIN 24 HOURS. INCLUDE ALL SUMPS IN BASE BID. SHOULD SUMPS NOT BE NECESSARY AFTER PERCOLATION TEST, PROVIDE CHANGE ORDER DEDUCT TO OWNER.
18. IF PLANTING HOLES ARE DUG WITH A LARGE AUGER, BREAK DOWN THE SIDES OF THE HOLE WITH A SHOVEL TO ELIMINATE GLAZING AND TO CREATE THE SPECIFIED SIDE SLOPE ON THE INSIDE OF THE PLANTING HOLE.
19. CONTRACTOR SHALL KEEP AREAS OF WORK CLEAN, NEAT, AND ORDERLY. PAVED SURFACES ARE TO BE CLEANED OF SOIL AND DEBRIS AT THE CLOSE OF EACH WORKDAY.
20. LANDSCAPE MATERIAL SHALL BE WELL FORMED, VIGOROUS, GROWING SPECIMENS WITH GROWTH TYPICAL OF VARIETIES SPECIFIED AND SHALL BE FREE FROM DAMAGE, INSECTS, AND DISEASES. MATERIAL SHALL EQUAL OR SURPASS #1 QUALITY AS DEFINED IN THE CURRENT ISSUE OF "AMERICAN STANDARD FOR NURSERY STOCK" AS PUBLISHED BY THE AMERICANHORT (F.K.A. AMERICAN NURSERY & LANDSCAPE ASSOCIATION).
21. PLANT MATERIAL IS TO BE WELL ROOTED, NOT ROOT BOUND, SUCH THAT THE ROOT BALL REMAINS INTACT THROUGHOUT THE PLANTING PROCESS. DEFICIENT PLANT MATERIAL SHALL BE REJECTED BY THE LANDSCAPE ARCHITECT.
22. CONTAINER GROWN STOCK SHALL HAVE BEEN GROWN IN A CONTAINER LONG ENOUGH FOR THE ROOT SYSTEM TO HAVE DEVELOPED SUFFICIENTLY TO HOLD THE SOIL TOGETHER FIRMLY, BUT NOT SO LONG AS TO HAVE BECOME POT BOUND. CONTAINER GROWN STOCK SHALL HAVE A WELL-ESTABLISHED ROOT SYSTEM REACHING THE SIDES OF THE CONTAINER TO MAINTAIN A FIRM BALL BUT SHALL NOT HAVE EXCESSIVE ROOT GROWTH ENCIRCLING THE INSIDE OF THE CONTAINER.
23. PLANT MATERIAL IS TO BE CAREFULLY HANDLED BY THE ROOT BALL, NOT THE TRUNK, BRANCHES, AND/OR FOLIAGE OF THE PLANT. MISHANDLED PLANT MATERIAL SHALL BE REJECTED BY THE LANDSCAPE ARCHITECT. PLANTS WITH BROKEN ROOT BALLS OR SUBSTANTIAL DAMAGE SHALL BE REPLACED PRIOR TO PLANTING.
24. CONTRACTOR SHALL STAKE TREE LOCATIONS FOR APPROVAL PRIOR TO INSTALLATION. CONFLICTS OR DISCREPANCIES SHALL BE FIELD ADJUSTED AND APPROVED BY LANDSCAPE ARCHITECT PRIOR TO INSTALLATION. NOTIFY THE GOVERNING JURISDICTION AND OWNER'S REPRESENTATIVE OR LANDSCAPE ARCHITECT OF SIGNS, POWER LINES, OR OTHER CONFLICTS BEFORE PLANTING TREES.
25. NO TREE PLANTING SHALL OCCUR WITHIN SIGHT DISTANCE TRIANGLE AREAS INDICATED ON THE PLAN SET. CONTRACTOR SHALL STAKE THE LOCATION OF TREE PLANTING IN THE RIGHT-OF-WAY IN THE FIELD PRIOR TO INSTALLATION FOR REVIEW AND APPROVAL BY LANDSCAPE ARCHITECT AND AUTHORITIES HAVING JURISDICTION. OWNER SHALL AGREE TO MAINTAIN THE STRUCTURE OF TREE PLANTING IN THE RIGHT-OF-WAY TO ELIMINATE SIGHT DISTANCE CONFLICTS.
26. PROPOSED TREES TO BE PLANTED A MINIMUM 20 FEET FROM LIGHT POLES AS MEASURED FROM TRUNK OF THE TREE TO THE POLE.
27. PROPOSED TREES TO BE PLANTED A MINIMUM 10 FEET FROM FIRE HYDRANTS AS MEASURED FROM TRUNK OF THE TREE TO THE HYDRANT.
28. CONTRACTOR SHALL LAY OUT ON THE GROUND SHRUBS, ORNAMENTAL GRASSES, AND GROUNDCOVERS FOR APPROVAL BY LANDSCAPE ARCHITECT PRIOR TO INSTALLATION. CONTRACTOR SHALL ANTICIPATE THAT SOME REARRANGEMENT OF MATERIAL WILL OCCUR.
29. MULCH SHALL BE ORGANIC, FREE OF TRASH, AND MAINTAINED WEED FREE. MULCH SHALL BE APPLIED IMMEDIATELY AFTER COMPLETION OF PLANTING OPERATIONS. SEE SPECIFICATIONS FOR MORE INFORMATION.
30. CONTRACTOR IS RESPONSIBLE FOR WATERING PLANTED AREAS THROUGHOUT THE WARRANTY PERIOD TO ENSURE PLANT ESTABLISHMENT.
31. REPAIR OR REPLACE, IN A MANNER APPROVED BY THE LANDSCAPE ARCHITECT , NEW TREES AND OTHER PLANTS THAT ARE DAMAGED AFTER INSTALLATION BY CONSTRUCTION OPERATIONS.
32. IT SHALL BE THE CONTRACTOR'S RESPONSIBILITY TO MONITOR THE PROJECT DURING THE GUARANTEE PERIOD AND INFORM THE OWNER IF PROBLEMS DEVELOP WITH THE PLANT MATERIAL. CONTRACTOR SHALL REMOVE DEAD AND UNHEALTHY PLANT MATERIAL AS DEFINED IN THE SPECIFICATIONS AND IMMEDIATELY REPLACE AT THE CONTRACTOR'S EXPENSE.
33. REFER TO SPECIFICATIONS FOR MORE INFORMATION ON DELIVERY, STORAGE AND HANDLING OF PLANT MATERIAL, QUALITY ASSURANCE, PRODUCTS AND MATERIALS, SOIL TESTING AND AMENDMENTS, INSTALLATION, MAINTENANCE AND WARRANTIES, AND ADDITIONAL PLANTING REQUIREMENTS.
34. LANDSCAPE WORK SHALL INCLUDE THE FURNISHING, INSTALLATION, AND WARRANTY OF ALL PLANTING MATERIALS WITHIN THE PROJECT AREA.

ARBORICULTURE NOTES

1. CONTRACTOR SHALL HIRE A CERTIFIED ARBORIST TO REVIEW EXISTING TREES TO REMAIN WITHIN WORK AREA FOR ROUTINE PRUNING, FERTILIZATION, AND SOIL AERATION. ROUTINE PRUNING TO INCLUDE MINOR DEADWOOD REMOVAL AND ELIMINATION OF CONFLICTS. ALL PRUNING SHALL BE PERFORMED UNDER THE SUPERVISION OF AN INTERNATIONAL SOCIETY OF ARBORICULTURE (ISA) CERTIFIED ARBORIST.
2. CERTIFIED ARBORIST SHALL REMOVE GIRDLING ROOT CONDITIONS ON EXISTING TREES TO REMAIN WITHIN LIMITS OF WORK. GIRDLING ROOT CONDITIONS MAY INCLUDE BUT ARE NOT LIMITED TO COMPACTED SOIL, MULCH PILED ONTO THE TRUNK, OR TREE INITIALLY BEING PLANTED TOO DEEP. WHEN REMOVING GIRDLING ROOT CONDITIONS, THE ROOT FLARE MUST BE EXPOSED.
3. CERTIFIED ARBORIST SHALL FERTILIZE EXISTING TREES TO REMAIN WITHIN LIMITS OF WORK BASED ON SOIL TEST RESULTS.
4. CERTIFIED ARBORIST SHALL PROVIDE SOIL INOCULATES FOR EXISTING TREES WITHIN LIMITS OF WORK INCLUDING TREATMENT TO ROOTZONE OF EXISTING TREES AFTER PAVEMENT DEMOLITION AND PRIOR TO NEW PAVEMENT AND SITE WORK INSTALLATION.
5. CERTIFIED ARBORIST SHALL SUBMIT TO OWNER'S REPRESENTATIVE WRITTEN RECOMMENDATIONS OF MEASURES NEEDED TO ENSURE HEALTH OF EXISTING TREES. CONTRACTOR SHALL OBTAIN THE TREE PROTECTION, PRESERVATION, AND MANAGEMENT PLAN, PREPARED BY A CERTIFIED ARBORIST, FROM THE OWNER'S REPRESENTATIVE. STRICT ADHERENCE TO THIS PLAN IS REQUIRED THROUGHOUT LAND DISTURBING, DEMOLITION, AND CONSTRUCTION OPERATIONS FOR ALL TREES DEPICTED ON THE PLANS TO REMAIN WITHIN, OR IMMEDIATELY ADJACENT TO, THE LIMITS OF WORK.
6. WHEN INSTALLING UTILITIES (WATER LINE, ETC.) WITHIN THE DRIP LINE OF TREES TO REMAIN WITHIN THE PROJECT AREA, CONTRACTOR SHALL EITHER INSTALL LINE(S) 4'-5' UNDERNEATH THE ROOT SYSTEM VIA BORING OR HAVE CERTIFIED ARBORIST DIG A TRENCH WITH AIR SPADE TOOLS TO DISPLACE SOIL. ROOTS SHALL ONLY BE PRUNED WITH HAND TOOLS IF ADDITIONAL CLEARING IS REQUIRED FOR INSTALLATION OF UTILITIES.

PLANT SCHEDULE

SYMBOL	CODE	QTY	BOTANICAL NAME	COMMON NAME	CAL	HEIGHT	CONT	REMARKS
CANOPY TREES								
	CBF	2	Carpinus betulus `Fastigiata`	Pyramidal European Hornbeam	2.5"	10` min		
	LTT	1	Liriodendron tulipifera	Tulip Tree	2.5"	10` min		
	NSS	14	Nyssa sylvatica	Sour Gum	2.5"	10` min		
	QAW	4	Quercus alba	White Oak	2.5"	10` min		
	QLO	4	Quercus lyrata	Overcup Oak	2.5"	10` min		
EVERGREEN TREES								
	JVE	3	Juniperus virginiana	Eastern Red Cedar	-	8` min		
EVERGREEN UNDERSTORY TREES								
	MVS	5	Magnolia virginiana	Sweet Bay	-	6` min		
UNDERSTORY TREES								
	HCJ	27	Halesia carolina 'Jersey Belle'	Jersey Belle Carolina Silverbell	1.5" min	6` min		

SYMBOL	CODE	QTY	BOTANICAL NAME	COMMON NAME	CONT	HEIGHT	SPREAD	REMARKS
SHRUBS								
	AGRC	18	Abelia x grandiflora `Rose Creek`	Rose Creek Abelia	-	18" min	18" min	
	DISB	13	Distylium x 'PIIDIST-II'	Blue Cascade® Distylium	-	24" min	30" min	
DECIDUOUS SHRUBS								
	CAAB	6	Callicarpa americana	American Beautyberry	-	18" min		
	HDQF	3	Hydrangea quercifolia	Oakleaf Hydrangea	-	36" min		
	HVWH	1	Hamamelis virginiana	Common Witch Hazel	-	48" min		Multi-stem
	IVHG	14	Itea virginica `Henry`s Garnet`	Henry`s Garnet Sweetspire	-	24" min		
EVERGREEN SHRUBS								
	IGIH	5	Ilex glabra	Inkberry Holly	-	18" min		
	IGNN	14	Ilex glabra `Nigra`	Nigra Inkberry	-	18" min		
	IVND	6	Ilex vomitoria `Nana`	Dwarf Yaupon	-	18" min		
	IVWR	17	Ilex verticillata `Winter Red`	Winter Red Holly	-	24" min		
	IVYH	2	Ilex vomitoria	Yaupon Holly	-	30" min		
	RAFA	14	Rhododendron azalea `Formosa`	Azalea	-	24" min		
	VDDV	4	Viburnum davidii	David Viburnum	-	18" min		

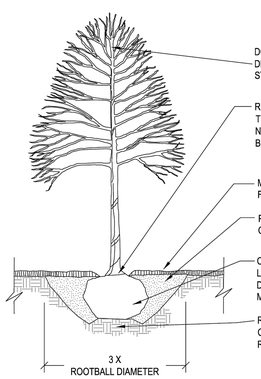

CONTACT INFORMATION:
CITY OF RALEIGH PARKS, RECREATION AND CULTURAL RESOURCES DEPARTMENT URBAN FORESTER:
TREES@RALEIGHNC.GOV
WWW.RALEIGHNC.GOV

NOTES:
1. TREES MUST MEET THE TREE QUALITY STANDARDS IN CH. 2 OF THE CITY TREE MANUAL.
2. CONTRACTOR IS RESPONSIBLE FOR ADEQUATE DRAINAGE OF ALL PLANTING PITS. (POSITIVE DRAINAGE AWAY FROM PIT)
3. TREES SHALL BE PLANTED BETWEEN OCTOBER 1ST AND APRIL 30TH.
4. A TREE IMPACT PERMIT IS REQUIRED.
5. ELECTRICAL OUTLETS AND OTHER UTILITIES ARE PROHIBITED IN THE PLANTING AREA IMMEDIATELY SURROUNDING THE TREE.
6. IF STAKING IN ACCORDANCE WITH THE CITY TREE MANUAL, THE STAKING MUST BE REMOVED WITHIN ONE YEAR.
7. TREES WILL HAVE A MINIMUM 1 YEAR WARRANTY AFTER THE INITIAL PLANTING IS APPROVED BY THE CITY.

CITY OF RALEIGH STANDARD DETAIL		
REVISIONS	DATE: 6/2020	NOT TO SCALE
10/2019	TREE PLANTING DETAIL	
	TPP-03	

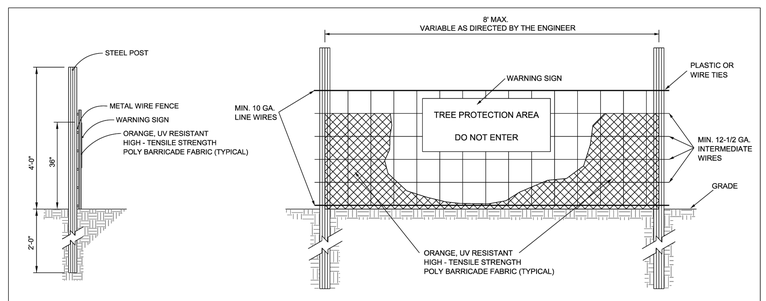

SIDE VIEW

FRONT VIEW

NOTE: FOR TREE PROTECTION ONLY

CITY OF RALEIGH STANDARD DETAIL		
REVISIONS	DATE: 6/2020	NOT TO SCALE
	STANDARD TREE PROTECTION DETAIL	
	TPP-01	

NOTES:
1. TREE PROTECTION FENCING MUST BE INSTALLED AT A MINIMUM RADIUS OF THE CRITICAL ROOT ZONE (SEE DETAIL TPP-02 FOR EXAMPLES)
2. THE TREE PROTECTION FENCING MUST REMAIN IN PLACE FOR THE DURATION OF THE PROJECT UNLESS OTHERWISE APPROVED BY URBAN FORESTRY STAFF.
3. APPROVED IMPACT PROTECTION DEVICES MUST BE REMOVED AFTER CONSTRUCTION WHEN APPLICABLE.
4. SIGNS SHALL BE PLACED AT 50' MAXIMUM INTERVALS. PLACE A SIGN AT EACH END OF LINEAR TREE PROTECTION AND 50' ON CENTER FOR THE REMAINDER
5. FOR TREE PROTECTION AREAS LESS THAN 200' IN PERIMETER, PROVIDE NO LESS THAN ONE SIGN PER PROTECTED AREA.
6. ATTACH SIGNS SECURELY TO FENCE POSTS AND FABRIC.
7. ADDITIONAL SIGNS MAY BE REQUIRED BY CITY OF RALEIGH BASED ON ACTUAL FIELD CONDITIONS.
8. SIGNS ARE TO BE MADE OF DURABLE, WEATHERPROOF MATERIAL WITH LETTERS A MINIMUM OF 2 1/2" HIGH, CLEARLY LEGIBLE AND SPACED AS SHOWN.

PROVIDE WARNING LANGUAGE IN BOTH ENGLISH AND SPANISH, AS SHOWN

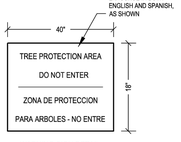

WARNING SIGN DETAIL

CONTACT INFORMATION:
CITY OF RALEIGH PARKS, RECREATION AND CULTURAL RESOURCES DEPARTMENT URBAN FORESTER:
TREES@RALEIGHNC.GOV
WWW.RALEIGHNC.GOV

SEE SHEET C6.00 FOR ALL PROJECT, SITE, GRADING, STORM DRAINAGE AND UTILITY NOTES

ALL CONSTRUCTION SHALL BE IN ACCORDANCE WITH THE CURRENT CITY OF RALEIGH AND NCDOT (WHERE APPLICABLE) ENGINEERING DESIGN AND CONSTRUCTION STANDARDS

PRELIMINARY DRAWING - NOT RELEASED FOR CONSTRUCTION

McADAMS
The John R. McAdams Company, Inc.
621 Hillsborough Street
Suite 500
Raleigh, NC 27603
phone 919. 361. 5000
fax 919. 361. 2269
license number: C-0293, C-187
www.mcadamsco.com

CLIENT

HALLE BUILDING GROUP
56 HUNTER STREET, STE. 110
APEX, NC 27502
ERIC RIFKIN
PHONE: 919. 387. 1885

5000 LOUISBURG ROAD
ADMINISTRATIVE SITE REVIEW
5000 LOUISBURG ROAD
RALEIGH, NC

[redacted]

REVISIONS

NO. DATE

PLAN INFORMATION

PROJECT NO.	HLE-23002
FILENAME	HLE23002-ASR-LS1
CHECKED BY	SRD
DRAWN BY	KHW
SCALE	N/A
DATE	02. 09. 2024

SHEET

LANDSCAPE NOTES AND DETAILS

L5.01

M:\Projects\HLE\HLE23002\04-Production\Engineering\Production Drawings\Administrative Site Review\HLE23002-ASR-LS1.dwg, 2/9/2024 4:32:20 PM, Saxana Bennett

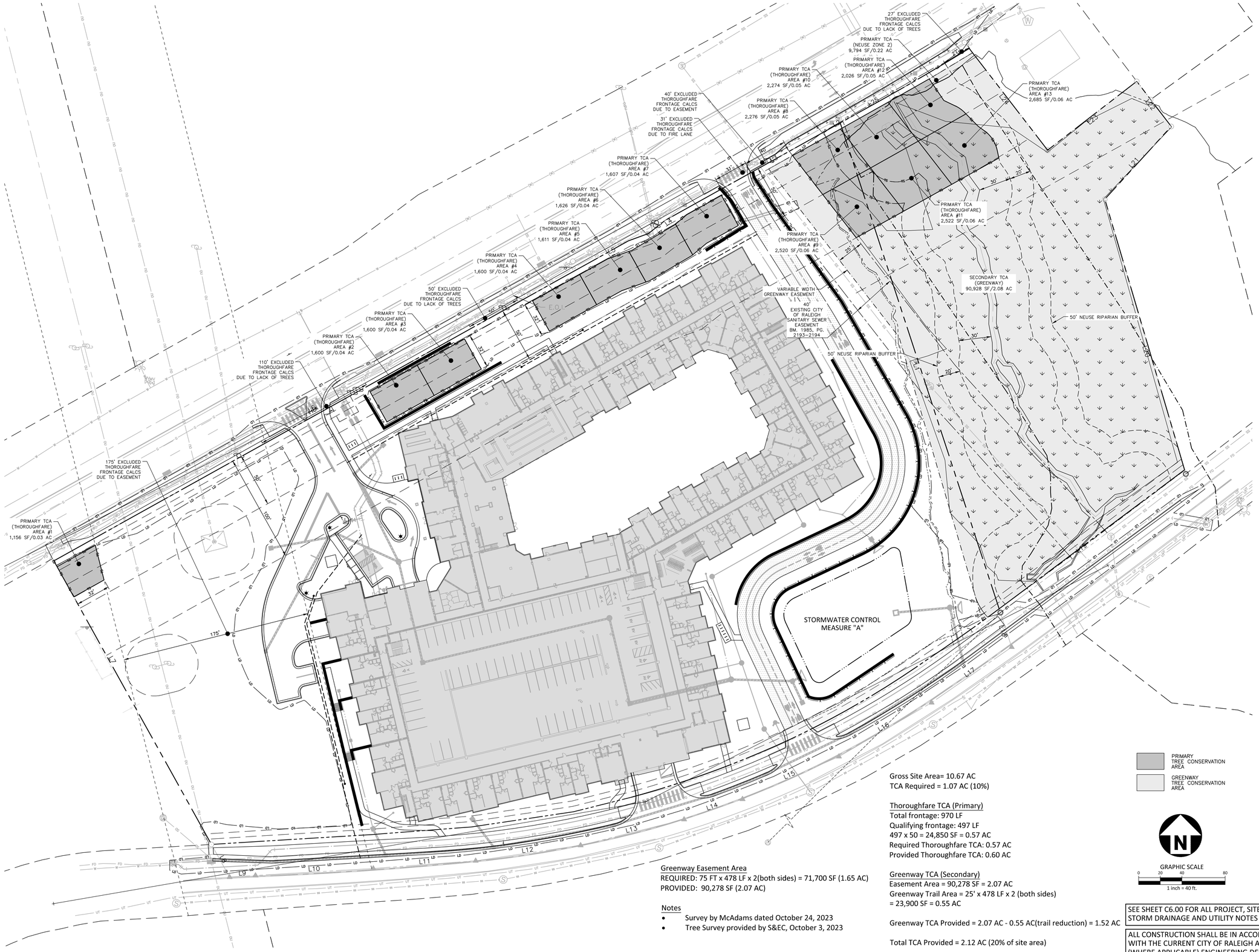

Gross Site Area= 10.67 AC
TCA Required = 1.07 AC (10%)

Thoroughfare TCA (Primary)
Total frontage: 970 LF
Qualifying frontage: 497 LF
497 x 50 = 24,850 SF = 0.57 AC
Required Thoroughfare TCA: 0.57 AC
Provided Thoroughfare TCA: 0.60 AC

Greenway TCA (Secondary)
Easement Area = 90,278 SF = 2.07 AC
Greenway Trail Area = 25' x 478 LF x 2 (both sides)
= 23,900 SF = 0.55 AC

Greenway TCA Provided = 2.07 AC - 0.55 AC(trail reduction) = 1.52 AC

Total TCA Provided = 2.12 AC (20% of site area)

Greenway Easement Area
REQUIRED: 75 FT x 478 LF x 2(both sides) = 71,700 SF (1.65 AC)
PROVIDED: 90,278 SF (2.07 AC)

Notes
- Survey by McAdams dated October 24, 2023
- Tree Survey provided by S&EC, October 3, 2023

PRIMARY TREE CONSERVATION AREA

GREENWAY TREE CONSERVATION AREA

N

GRAPHIC SCALE
0 20 40 80
1 inch = 40 ft.

SEE SHEET C6.00 FOR ALL PROJECT, SITE, GRADING, STORM DRAINAGE AND UTILITY NOTES

ALL CONSTRUCTION SHALL BE IN ACCORDANCE WITH THE CURRENT CITY OF RALEIGH AND NCDOT (WHERE APPLICABLE) ENGINEERING DESIGN AND CONSTRUCTION STANDARDS

MCADAMS
The John R. McAdams Company, Inc.
621 Hillsborough Street
Suite 500
Raleigh, NC 27603
phone 919. 361. 5000
fax 919. 361. 2269
license number: C-0293, C-187
www.mcadamsco.com

CLIENT

HALLE BUILDING GROUP
56 HUNTER STREET, STE. 110
APEX, NC 27502
ERIC RIFKIN
PHONE: 919. 387. 1885

Halle BUILDING GROUP

5000 LOUISBURG ROAD
ADMINISTRATIVE SITE REVIEW
5000 LOUISBURG ROAD
RALEIGH, NC

[redacted]

REVISIONS

NO.	DATE
1	
2	
3	
4	
5	
6	

PLAN INFORMATION

PROJECT NO.	HLE-23002
FILENAME	HLE23002-ASR-TC1
CHECKED BY	JAR
DRAWN BY	JAR
SCALE	1" = 40'
DATE	02. 09. 2024

SHEET

TREE CONSERVATION PLAN

L5.10

M:\Projects\HLE\HLE23002\04-Production\Engineering\Production Drawings\Current Drawings\Administrative Site Review\HLE23002-ASR-TC1.dwg, 2/9/2024 4:52:57 PM, Susana Bennett

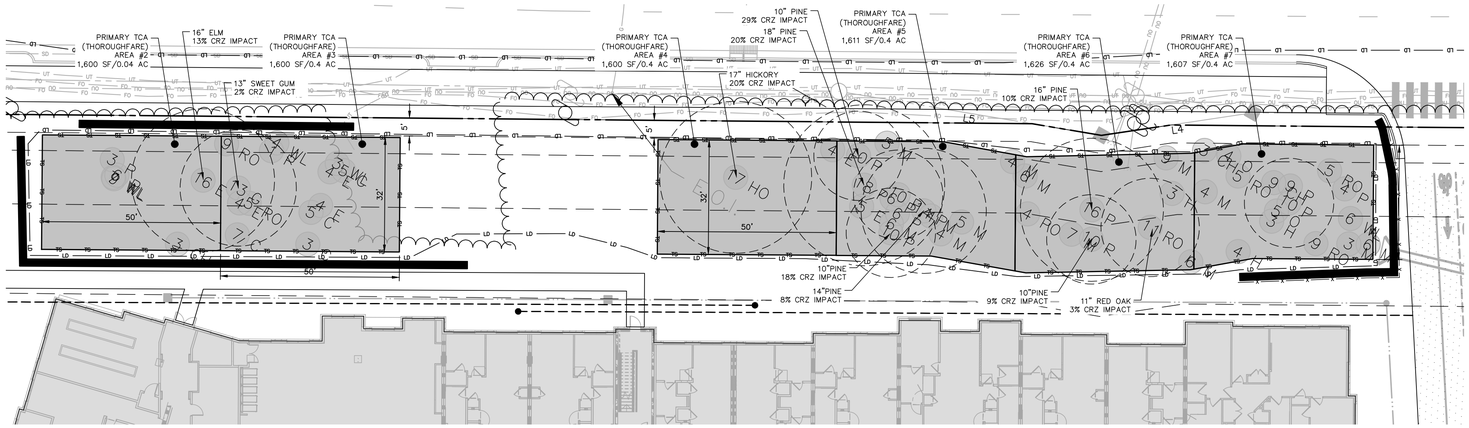

TREE CONSERVATION AREA ENLARGEMENTS

SCALE: 1" = 20'

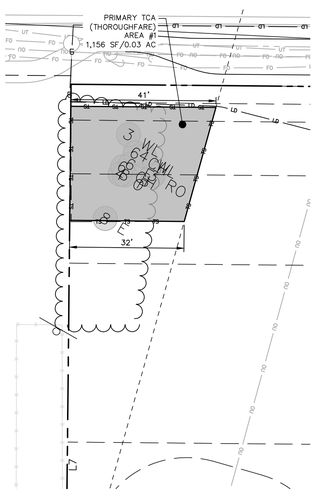

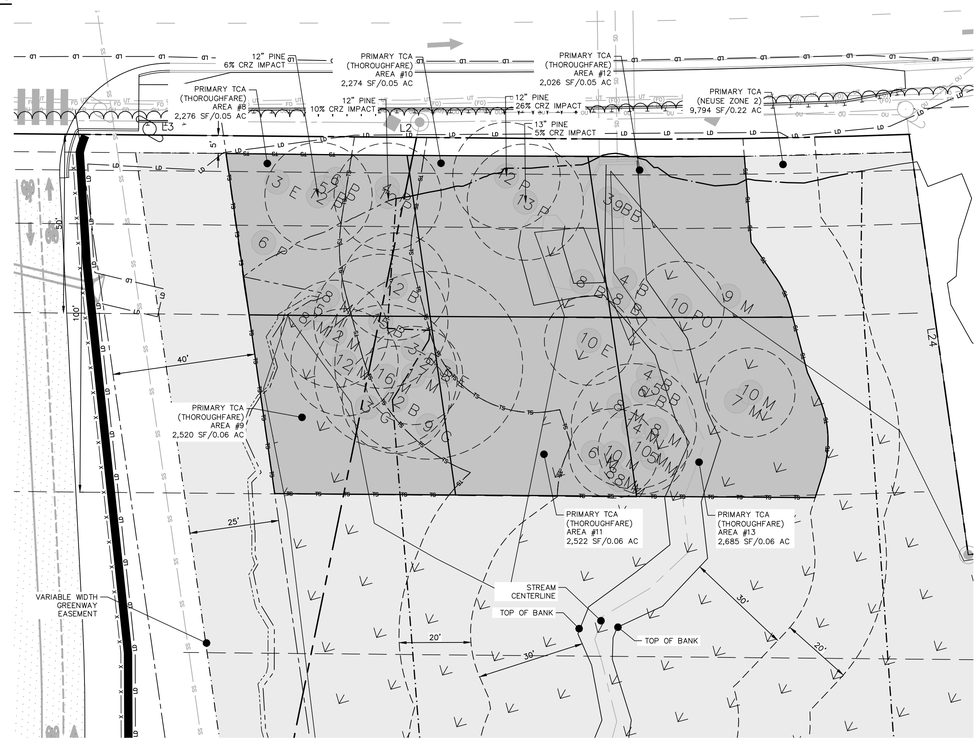

AREA 1	1,156 SF/0.03 AC	
SPECIES	DBH (IN)	BASAL AREA (FT^2)
PINE	8	0.3491
ELM	8	0.3491
ELM	6	0.1963
CHERRY	6	0.1963
CHERRY	6	0.1963
ELM	5	0.1364
WILLOW	4	0.0873
OAK	4	0.0873
WILLOW	3	0.0491
RED OAK	3	0.0491
	TOTAL	1.70
	BASAL AREA/AC	56.54

AREA 2	1,600 SF/0.04 AC	
SPECIES	DBH (IN)	BASAL AREA (FT^2)
ELM	16	1.3962
WILLOW	9	0.4418
WILLOW	7	0.2672
PINE	6	0.1963
PINE	3	0.0491
PINE	3	0.0491
CHERRY	3	0.0491
	TOTAL	2.45
	BASAL AREA/AC	61.22

AREA 3	1,600 SF/0.04 AC	
SPECIES	DBH (IN)	BASAL AREA (FT^2)
SWEET GUM	13	0.9217
RED OAK	9	0.4418
CEDAR	7	0.2672
CEDAR	5	0.1364
CEDAR	5	0.1364
RED OAK	5	0.1364
ELM	4	0.0873
ELM	4	0.0873
ELM	4	0.0873
WILLOW	4	0.0873
WILLOW	3	0.0491
CEDAR	3	0.0491
PINE	1	0.0055
	TOTAL	2.49
	BASAL AREA/AC	62.31

AREA 4	1,600 SF/0.04 AC	
SPECIES	DBH (IN)	BASAL AREA (FT^2)
HICKORY	17	1.5762
ELM	4	0.0873
	TOTAL	1.66
	BASAL AREA/AC	41.59

AREA 5	1,611 SF/0.04 AC	
SPECIES	DBH (IN)	BASAL AREA (FT^2)
PINE	18	1.7671
PINE	14	1.0690
PINE	10	0.5454
PINE	10	0.5454
PINE	10	0.5454
PINE	6	0.1963
PINE	6	0.1963
PINE	6	0.1963
MAPLE	6	0.1963
ELM	5	0.1364
MAPLE	5	0.1364
MAPLE	5	0.1364
MAPLE	4	0.0873
MAPLE	4	0.0873
MAPLE	4	0.0873
	TOTAL	5.93
	BASAL AREA/AC	148.21

AREA 6	1,626 SF/0.04 AC	
SPECIES	DBH (IN)	BASAL AREA (FT^2)
PINE	16	1.3962
RED OAK	11	0.6599
PINE	10	0.5454
MAPLE	9	0.4418
MAPLE	7	0.2672
MAPLE	6	0.1963
MAPLE	6	0.1963
POPLAR	4	0.0873
HICKORY	3	0.0491
	TOTAL	3.84
	BASAL AREA/AC	95.99

AREA 7	1,607 SF/0.04 AC	
SPECIES	DBH (IN)	BASAL AREA (FT^2)
PINE	10	0.5454
CHERRY	9	0.4418
PINE	9	0.4418
RED OAK	9	0.4418
MAPLE	6	0.1963
WILLOW	6	0.1963
OAK	5	0.1364
RED OAK	5	0.1364
RED OAK	5	0.1364
HICKORY	4	0.0873
OAK	4	0.0873
MAPLE	4	0.0873
PINE	4	0.0873
CHERRY	3	0.0491
HICKORY	3	0.0491
MAPLE	3	0.0491
	TOTAL	3.17
	BASAL AREA/AC	79.22

AREA 8	2,276 SF/0.05 AC	
SPECIES	DBH (IN)	BASAL AREA (FT^2)
BIRCH	12	0.7854
PINE	12	0.7854
PINE	12	0.7854
MAPLE	8	0.3491
PINE	7	0.2672
PINE	6	0.1963
PINE	6	0.1963
MAPLE	5	0.1364
PINE	5	0.1364
PINE	4	0.0873
ELM	3	0.0491
	TOTAL	3.77
	BASAL AREA/AC	75.48

AREA 9	2,520 SF/0.06 AC	
SPECIES	DBH (IN)	BASAL AREA (FT^2)
BIRCH	21	2.4052
MAPLE	16	1.3962
BIRCH	15	1.2272
BIRCH	12	0.7854
MAPLE	12	0.7854
MAPLE	12	0.7854
MAPLE	11	0.6599
SWEET GUM	9	0.4418
MAPLE	8	0.3491
ELM	3	0.0491
SWEET GUM	3	0.0491
	TOTAL	8.93
	BASAL AREA/AC	148.89

AREA 10	2,274 SF/0.05 AC	
SPECIES	DBH (IN)	BASAL AREA (FT^2)
PINE	13	0.9217
PINE	12	0.7854
BIRCH	8	0.3491
	TOTAL	2.06
	BASAL AREA/AC	41.12

AREA 11	2,522 SF/0.06 AC	
SPECIES	DBH (IN)	BASAL AREA (FT^2)
ELM	10	0.5454
MAPLE	10	0.5454
MAPLE	8	0.3491
MAPLE	8	0.3491
MAPLE	8	0.3491
MAPLE	6	0.1963
ELM	3	0.0491
	TOTAL	2.38
	BASAL AREA/AC	39.72

AREA 12	2,026 SF/0.05 AC	
SPECIES	DBH (IN)	BASAL AREA (FT^2)
POPLAR	10	0.5454
BIRCH	9	0.4418
MAPLE	9	0.4418
BIRCH	8	0.3491
BIRCH	4	0.0873
BIRCH	3	0.0491
	TOTAL	1.91
	BASAL AREA/AC	38.29

AREA 13	2,685 SF/0.06 AC	
SPECIES	DBH (IN)	BASAL AREA (FT^2)
MAPLE	14	1.0690
MAPLE	10	0.5454
MAPLE	10	0.5454
MAPLE	8	0.3491
MAPLE	7	0.2672
BIRCH	6	0.1963
BIRCH	5	0.1364
MAPLE	5	0.1364
BIRCH	4	0.0873
	TOTAL	5.33
	BASAL AREA/AC	55.54

TREE LEGEND

SZ B	BIRCH
SZ C	CEDAR
SZ CH	CHERRY
SZ E	ELM
SZ G	SWEET GUM
SZ H	HICKORY
SZ M	MAPLE
SZ O	OAK
SZ P	PINE
SZ PO	POPLAR
SZ RO	RED OAK
SZ WL	WILLOW

DBH INCH SIZE OF TREE
TYPE OF TREE

CRITICAL ROOT ZONE (1.25 x DBH IN FEET)

PRIMARY TREE CONSERVATION AREA

GREENWAY TREE CONSERVATION AREA

Gross Site Area= 10.67 AC
TCA Required = 1.06 AC

Thoroughfare TCA (Primary)
Total frontage: 970 LF
Qualifying frontage: 497 LF
497 x 50 = 24,850 SF = 0.57 AC
Required Thoroughfare TCA: 0.58 AC
Provided Thoroughfare TCA: 0.60 AC

Greenway TCA (Secondary)
Gross area = 90,278 SF = 2.08 AC
Greenway Easement Trail Dedication = 25' x 478 LF x 2 (both sides)
= 23,900 SF = 0.55 AC

Greenway TCA Provided = 2.08 AC - 0.55 AC(trail reduction) = 1.53 AC

Total TCA Provided = 2.13 AC (20% of site area)

Greenway Trail Calculation
Stream length = +/- 478 LF
25 FT x 478 LF x 2(both sides) = 23,900 SF = 0.55 AC

GRAPHIC SCALE
0 10 20 40
1 inch = 20 ft.

SEE SHEET C6.00 FOR ALL PROJECT, SITE, GRADING, STORM DRAINAGE AND UTILITY NOTES

ALL CONSTRUCTION SHALL BE IN ACCORDANCE WITH THE CURRENT CITY OF RALEIGH AND NCDOT (WHERE APPLICABLE) ENGINEERING DESIGN AND CONSTRUCTION STANDARDS

MCADAMS
The John R. McAdams Company, Inc.
621 Hillsborough Street
Suite 500
Raleigh, NC 27603
phone 919. 361. 5000
fax 919. 361. 2269
license number: C-0293, C-187
www.mcadamsco.com

CLIENT

HALLE BUILDING GROUP
56 HUNTER STREET, STE. 110
APEX, NC 27502
ERIC RIFKIN
PHONE: 919. 387. 1885

Halle BUILDING GROUP

5000 LOUISBURG ROAD
ADMINISTRATIVE SITE REVIEW
5000 LOUISBURG ROAD
RALEIGH, NC

[redacted]

REVISIONS

NO.	DATE
1	
2	
3	
4	
5	
6	

PLAN INFORMATION

PROJECT NO.	HLE-23002
FILENAME	HLE23002-ASR-TC1
CHECKED BY	JAR
DRAWN BY	JAR
SCALE	1" = 20'
DATE	02. 09. 2024

SHEET

TREE CONSERVATION PLAN ENLARGEMENT

L5.11

M:\Projects\HLE\HLE23002\04-Production\Engineering\Production Drawings\Administrative Site Review\HLE23002-ASR-TC1.dwg, 2/9/2024 4:33:31 PM, Savana Bennett

STORMWATER CONTROL MEASURE 'A' CONSTRUCTION SPECIFICATIONS

GENERAL NOTES

1. PRIOR TO CONSTRUCTION, ANY DISCREPANCIES IN THE PLANS AND NOTES SHALL BE BROUGHT TO THE DESIGN ENGINEER'S ATTENTION IMMEDIATELY.

2. THE PROJECT WILL MEET ALL OF THE REQUIREMENTS RELATIVE TO BEST MANAGEMENT PRACTICES AND ENGINEERED STORMWATER CONTROL STRUCTURES AS OUTLINED IN THE CITY OF RALEIGH STORMWATER MANUAL.

3. THE FINAL CERTIFICATION FOR THIS FACILITY WILL INCLUDE A CERTIFICATION BY THE ON-SITE GEOTECHNICAL ENGINEER THAT THE PROJECT WAS CONSTRUCTED PER THE APPROVED PLANS. IT IS THE RESPONSIBILITY OF THE CONTRACTOR TO COORDINATE WITH THE ON-SITE GEOTECHNICAL ENGINEER FOR OBSERVATION AND TESTING SUCH THAT THE ON-SITE GEOTECHNICAL ENGINEER CAN CERTIFY THE CONSTRUCTION OF THE DAM EMBANKMENT AND SPILLWAY. THIS CERTIFICATION MUST ADDRESS THE TESTING FOR MATERIALS AND COMPACTION OF THE DAM EMBANKMENT AND SPILLWAY.

4. ALL CONSTRUCTION ACTIVITY RELATED TO THE PROPOSED STORMWATER CONTROL MEASURE SHALL BE PER THE DETAILS AND SPECIFICATIONS SHOWN IN THESE DRAWINGS. SOILS, COMPACTION, AND OTHER MISCELLANEOUS DETAILS AND SPECIFICATIONS MAY BE MODIFIED PER THE RECOMMENDATIONS OF THE ON-SITE GEOTECHNICAL ENGINEER. HOWEVER, PRIOR TO IMPLEMENTATION, THE DESIGN ENGINEER SHALL BE NOTIFIED OF ANY DEVIATION FROM THESE DESIGN DRAWINGS, INCLUDING SHOP DRAWINGS FOR ANY PROPOSED MODIFICATION.

5. DURING THE INITIAL STAGES OF CONSTRUCTION, THE STORMWATER CONTROL MEASURE MAY BE USED AS A SEDIMENT BASIN FOR EROSION CONTROL PURPOSES. IF SO, THE CONTRACTOR SHALL FOLLOW THE GENERAL CONSTRUCTION SEQUENCE BELOW:
   A. THE CONTRACTOR SHALL CONSTRUCT THE ENTIRE FACILITY (PERMANENT OUTLET STRUCTURE, DAM, ETC.) WITH THE EXCEPTION OF THE INTERIOR FINE GRADING FOR THE FACILITY. THE INTERIOR FINE GRADING WILL BE CONSTRUCTED ONCE THE EROSION CONTROL PHASE IS COMPLETE.
   B. THE TEMPORARY DRAW DOWN RISER (OR SKIMMER) SHALL BE CONNECTED TO THE PERMANENT 6"Ø DIP DRAIN PIPE.
   C. ONCE THE UPSTREAM DRAINAGE AREA IS STABILIZED AND THE EROSION CONTROL INSPECTOR APPROVES THE REMOVAL OF THE SEDIMENT BASIN, THE CONTRACTOR SHALL REMOVE THE TEMPORARY DRAW DOWN RISER (OR SKIMMER) AND CLEAN OUT THE BASIN. ALL SEDIMENT, TRASH, ETC. SHALL BE DISPOSED OF PROPERLY (I.E. - PLACED IN A LANDFILL) AND NOT STOCKPILED IN AN AREA WHERE WATER QUALITY COULD BE ADVERSELY AFFECTED.
   D. ONCE THE BASIN IS CLEANED OUT, AND ALL EROSION CONTROL DEVICES REMOVED, THE CONTRACTOR SHALL CONSTRUCT THE INTERIOR GRADING SHOWN ON THIS SHEET.
   E. ONCE THE GRADING IS COMPLETE, THE CONTRACTOR SHALL REQUEST AN ON-SITE INSPECTION AND AN AS-BUILT SURVEY PRIOR TO INSTALLATION OF THE STORMWATER CONTROL MEASURE PLANTS. IF THE CONTRACTOR PLANTS THE PROPOSED VEGETATION PRIOR TO AN AS-BUILT SURVEY (AND SUBSEQUENT APPROVAL), ANY CHANGES TO THE GRADING / RE-PLANTING OF PLANTS WILL BE AT THE CONTRACTOR'S EXPENSE.
   F. ONCE THE ENGINEER HAS APPROVED THE AS-BUILT GRADING, THE CONTRACTOR SHALL PLANT THE PROPOSED STORMWATER CONTROL MEASURE PLANTS SHOWN ON THE LANDSCAPE PLAN FOR THE FACILITY. AFTER COMPLETION OF THE PLANTING, THE LANDSCAPE CONTRACTOR SHALL PROVIDE A LETTER TO THE ENGINEER CERTIFYING THAT THE PLANTS HAVE BEEN INSTALLED PER THE APPROVED STORMWATER CONTROL MEASURE PLANTING PLAN.
6. ALL OSHA REQUIREMENTS FOR EXCAVATIONS (SHORING, DEPTH, ETC.) ARE THE RESPONSIBILITY OF THE CONTRACTOR. IF REQUIRED, THE CONTRACTOR SHALL PROVIDE AN EXCAVATION PLAN TO BE SEALED BY A NC P.E. IT IS THE RESPONSIBILITY OF THE CONTRACTOR TO DETERMINE IF AN EXCAVATION PLAN IS REQUIRED. THE JOHN R. MCADAMS COMPANY ASSUMES NO RESPONSIBILITY FOR ANY EXCAVATION DESIGN RELATED TO SAFETY OR OSHA REQUIREMENTS.

7. ON-SITE GEOTECHNICAL ENGINEER TO DETERMINE IF IN-SITU SOILS ENCOUNTERED WOULD MAINTAIN A STORMWATER CONTROL MEASURE PERMANENT POOL AT DESIGN ELEVATION. IF HIGHLY PERMEABLE SOILS ARE ENCOUNTERED THAT WOULD NOT MAINTAIN THE PERMANENT POOL ELEVATION AS DESIGNED, A CLAY LINER MAY BE REQUIRED TO MAINTAIN A PERMANENT POOL OF WATER IN THE STORMWATER CONTROL MEASURE. FINAL DETERMINATION IF A CLAY LINER IS NEEDED SHALL BE THE RESPONSIBILITY OF THE ON-SITE GEOTECHNICAL ENGINEER. UPON DETERMINATION OF HIGHLY PERMEABLE SOIL CONDITIONS, ON-SITE GEOTECHNICAL ENGINEER WILL INFORM THE DESIGN ENGINEER AND RECOMMEND LINER SPECIFICATIONS.

8. IT IS ANTICIPATED THAT DEWATERING WILL BE NECESSARY IN THE EXCAVATION AREAS (E.G. - EMBANKMENT SUB GRADE, INTERIOR PORTIONS OF THE STORMWATER CONTROL MEASURE, KEY TRENCH, ETC.). THEREFORE, THE CONTRACTOR SHALL FURNISH, INSTALL, OPERATE, AND MAINTAIN ANY PUMPING EQUIPMENT, ETC. NEEDED FOR REMOVAL OF WATER FROM VARIOUS PARTS OF THE STORMWATER CONTROL MEASURE SITE. DURING PLACEMENT OF FILL WITHIN THESE AREAS, THE CONTRACTOR SHALL KEEP THE WATER LEVEL BELOW THE BOTTOM OF THE EXCAVATION / CONSTRUCTION AREAS. THE MANNER IN WHICH THE WATER IS REMOVED SHALL BE SUCH THAT THE EXCAVATION BOTTOM AND SIDE SLOPES ARE STABLE, WITH NO SEDIMENT DISCHARGED FROM THE SITE (I.E. PUMPED WATER MAY NEED TO BE DIRECTED TO AN APPROVED EROSION CONTROL DEVICE SUCH AS A DIRT BAG (ACF ENVIRONMENTAL), OR ENGINEER APPROVED EQUIVALENT, PRIOR TO DISCHARGE).

9. THE GRADES SHOWN ON THIS PLAN ARE FINISHED GRADES. IF THE EXISTING SOIL LAYER AFTER CONSTRUCTION / COMPACTION IS NOT DETERMINED SUITABLE BY A LANDSCAPE PROFESSIONAL FOR THE WET POND PLANTINGS, THEN THE CONTRACTOR SHALL AMEND THE PLANTING AREA OF THE WET POND AS DIRECTED BY A LANDSCAPE PROFESSIONAL.

10. PRIOR TO TOPSOIL INSTALLATION, THE CONTRACTOR SHALL SCARIFY THE TOP 2"-3" OF THE BERM SECTION TO PROMOTE BONDING OF THE TOPSOIL WITH THE COMPACTED FILL. THE TOPSOIL DEPTH SHALL RANGE FROM 3"-4" ON THE DAM EMBANKMENT AND AQUATIC SHELF. PLEASE NOTE THE TOPSOIL SHALL BE AMENDED, AS DIRECTED BY A LANDSCAPE PROFESSIONAL, PRIOR TO INSTALLATION ON THE EMBANKMENT AND AQUATIC SHELF.

11. THE CONTRACTOR SHALL REFER TO THE LANDSCAPE PLAN FOR THE PERMANENT PLANTING PLAN/SCHEDULE FOR THIS FACILITY. CONTRACTOR SHALL COORDINATE WITH A LANDSCAPE PROFESSIONAL REGARDING SCHEDULING FOR PLANT INSTALLATION. PLEASE NOTE THAT NO TREES/SHRUBS OF ANY TYPE MAY BE PLANTED ON THE PROPOSED DAM EMBANKMENT (FILL AREAS).

OUTLET STRUCTURE MATERIAL SPECIFICATIONS

1. THE 30"Ø RCP OUTLET BARREL SHALL BE CLASS III RCP, MODIFIED BELL AND SPIGOT, MEETING THE REQUIREMENTS OF ASTM C76-LATEST. THE PIPES SHALL HAVE CONFINED O-RING RUBBER GASKET JOINTS MEETING ASTM C-443-LATEST. THE PIPE JOINTS SHALL BE TYPE R-4.

2. THE STRUCTURAL DESIGN FOR THE 5' X 5' (INTERNAL DIMENSIONS) RISER BOX WITH EXTENDED BASE SHALL BE BY OTHERS. PRIOR TO ORDERING THE STRUCTURES, THE CONTRACTOR SHALL PROVIDE, TO THE DESIGN ENGINEER FOR REVIEW, SHOP DRAWINGS AND SUPPORTING STRUCTURAL CALCULATIONS SEALED BY A P.E. REGISTERED IN NORTH CAROLINA DEMONSTRATING THE PERTINENT VERTICAL LOADS ARE SUPPORTED BY THE CONCRETE RISER STRUCTURE.

3. THE RISER BOX OUTLET STRUCTURE SHALL BE PROVIDED WITH STEPS 16" ON CENTER. STEPS SHALL BE PROVIDED ON THE INNER WALL OF THE RISER BOX. STEPS SHALL BE IN ACCORDANCE WITH NCDOT STD. 840.66. PLEASE REFER TO SHEET C9.XX FOR LOCATION OF THE RISER STEPS. NOTE THE STEPS SHALL LINE UP WITH THE ACCESS HATCH OF THE TRASH RACK.

4. THE CONCRETE ANTI-FLOTATION BLOCK SHALL BE CAST-IN-PLACE. STEEL REINFORCEMENT AND CONNECTION TO THE RISER SHALL BE PROVIDED IN ACCORDANCE WITH THE DETAIL ON SHEET C9.XX. THE CONTRACTOR SHALL ENSURE THE WEIGHT OF THE ENTIRE RISER STRUCTURE IS GREATER THAN OR EQUAL TO XX,XXX LBS. IN LIEU OF CAST-IN-PLACE, THE CONTRACTOR MAY OPT FOR A PRECAST ANTI-FLOTATION BLOCK. SHOP DRAWINGS FOR THE PRECAST BLOCK SHALL BE SUBMITTED TO THE ENGINEER FOR REVIEW. THE PRECAST ANTI-FLOTATION BLOCK SHALL HAVE A SHIPPING WEIGHT OF XX,XXX LBS.

5. THE RISER BOX JOINTS SHALL BE SEALED USING BUTYL RUBBER SEALANT CONFORMING TO ASTM-C990-LATEST. IF NECESSARY, THE CONTRACTOR SHALL INCORPORATE A WATERSTOP INTO THE RISER BOX JOINT TO ENSURE A WATERTIGHT CONNECTION. THE CONTRACTOR SHALL PARGE JOINTS ON BOTH THE INSIDE AND OUTSIDE WITH NON-SHRINK GROUT AND INSTALL GALVANIZED STEEL STRAPS PER DETAIL ON SHEET C9.XX.

6. PRIOR TO ORDERING, THE CONTRACTOR SHALL SUBMIT TRASH RACK SHOP DRAWINGS TO THE ENGINEER FOR REVIEW. CONTRACTOR SHALL ENSURE THAT AN ACCESS HATCH IS PROVIDED WITHIN THE TRASH RACK (SEE DETAIL FOR LOCATION) THAT WILL ALLOW FOR FUTURE MAINTENANCE ACCESS. CONTRACTOR SHALL ALSO PROVIDE A CHAIN AND LOCK FOR SECURING THE ACCESS HATCH. NOTE THE ACCESS HATCH SHALL LINE UP WITH THE ACCESS STEPS AFTER INSTALLATION.

7. ALL POURED CONCRETE SHALL MEET THE FOLLOWING SPECIFICATIONS UNLESS OTHERWISE NOTED:

   -MINIMUM 3000 PSI (28 DAY)
   -SLUMP = 3" - 5"
   -ENTRAINED AIR = 5% - 7%

   PLEASE NOTE NO CONCRETE SHALL BE POURED WHEN THE AMBIENT AIR TEMPERATURES ARE EXPECTED TO BE ABOVE 85°F OR BELOW 40°F. CAST-IN-PLACE CONCRETE SHALL BE "WET CURED" AFTER FINISHING FOR A MINIMUM OF 48 HOURS.

   ON-SITE GEOTECHNICAL ENGINEER TO ENSURE AND CERTIFY ALL POURED CONCRETE MEETS THE ABOVE SPECIFICATIONS.

8. GEOTEXTILE FABRIC FOR THE 30"Ø RCP OUTLET BARREL JOINTS SHALL BE MIRAFI 180N OR ENGINEER APPROVED EQUAL (NON-WOVEN FABRIC).

9. STORMWATER CONTROL MEASURE EMERGENCY DRAW DOWN IS VIA AN 6"Ø PLUG VALVE. THE VALVE SHALL BE A M&H STYLE 1820 ECCENTRIC VALVE OR APPROVED EQUAL. THIS VALVE IS IN ACCORDANCE WITH AWWA C-517, AND SHALL BE OPERABLE FROM TOP OF OUTLET STRUCTURE VIA A HAND WHEEL (SEE DETAIL SHEET C9.XX). THE CONTRACTOR SHALL PROVIDE A REMOVABLE VALVE WRENCH WITH A HAND WHEEL ON TOP FOR OPERATION OF THE 6"Ø PLUG VALVE.

CONSTRUCTION SEQUENCE

1. PRIOR TO CONSTRUCTION, THE OWNER SHALL OBTAIN A LAND DISTURBING (GRADING) PERMIT AND AN "APPROVAL TO CONSTRUCT" FROM THE CITY OF RALEIGH AND ALL OTHER NECESSARY PERMITS FROM APPLICABLE AGENCIES (E.G. 404 / 401 PERMITS)

2. INSTALL ALL SEDIMENT AND EROSION CONTROL MEASURES PER THE APPROVED SEDIMENT AND EROSION CONTROL PLAN. THE CONTRACTOR SHALL MAINTAIN ALL APPROVED SEDIMENT AND EROSION CONTROL MEASURES THROUGHOUT THE ENTIRE PROJECT, AS REQUIRED. THE CONTRACTOR SHALL RECEIVE APPROVAL FROM THE EROSION CONTROL INSPECTOR, AS REQUIRED BY GOVERNING AGENCIES, PRIOR TO ANY CLEARING.

3. CLEAR AND GRUB AREA WITHIN THE LIMITS OF THE PROPOSED DAM CONSTRUCTION. ALL TREES AND THEIR ENTIRE ROOT SYSTEMS MUST BE REMOVED FROM THE DAM FOOTPRINT AREA AND BACKFILLED WITH SUITABLE SOIL MATERIAL. THE BACKFILLED AREAS SHALL BE COMPACTED TO THE SAME STANDARDS AS THE DAM EMBANKMENT. THE REMAINING AREA OF THE EMBANKMENT SHALL BE STRIPPED TO A SUITABLE DEPTH AS DIRECTED BY THE ON-SITE GEOTECHNICAL ENGINEER. ANY RESIDUAL SOILS TO BE LEFT IN PLACE MUST BE WELL SCARIFIED TO PROMOTE BONDING OF THE NEW EMBANKMENT FILL. NO EMBANKMENT MATERIAL SHALL BE PLACED FOR THE DAM OR KEY TRENCH UNTIL APPROVAL OF THE DAM SUBGRADE IS OBTAINED FROM THE ON-SITE GEOTECHNICAL ENGINEER.

4. EXCAVATE FOR THE NEW KEY TRENCH ALONG THE CENTERLINE OF THE PROPOSED DAM EMBANKMENT. THE TRENCH SHALL EXTEND A MINIMUM OF 5 FT BELOW EXISTING GRADE OR 2 FT BELOW THE 24"Ø RCP OUTLET BARREL AND SHALL HAVE A MINIMUM BOTTOM WIDTH OF 5 FEET. THE KEY TRENCH SIDESLOPES SHALL BE A MINIMUM OF 1:1 (H:V). WHEN EXCAVATING THE KEY TRENCH, IF ANY DEBRIS IS ENCOUNTERED TO AN EXTENT THAT SUCH DEBRIS MAY EXIST IN OTHER INSITU PORTIONS OF THE DAM EMBANKMENT, IT SHOULD ALSO BE REMOVED. THE KEY TRENCH SHALL BE COMPACTED TO THE SAME SPECIFICATION LISTED IN ITEM 4 OF THE SECTION TITLED "BERM AND SOIL COMPACTION SPECIFICATIONS." DEPENDING UPON ON-SITE SOIL CONDITIONS ENCOUNTERED DURING EXCAVATION, THE ON-SITE GEOTECHNICAL ENGINEER MAY VARY THE DEPTH AND DIMENSIONS OF THE KEY TRENCH AS DEEMED NECESSARY. THE ON-SITE GEOTECHNICAL ENGINEER SHALL RETAIN DOCUMENTATION OF ANY VARIATION FOR FUTURE AS-BUILT SUBMITTALS TO THE CITY OF RALEIGH.

5. BEGIN PLACEMENT OF BACKFILL WITHIN THE KEY TRENCH. THE KEY TRENCH SHALL BE COMPACTED TO THE SPECIFICATIONS LISTED ITEM 4 OF THE SECTION TITLED "BERM AND SOIL COMPACTION SPECIFICATIONS." THE KEY TRENCH SHALL BE TESTED PER THE SPECIFICATIONS LISTED IN THAT SECTION.

6. PRIOR TO INSTALLATION, SUBGRADE CONDITIONS ALONG THE SPILLWAY PIPES SHOULD BE EVALUATED BY THE ON-SITE GEOTECHNICAL ENGINEER TO ASSESS WHETHER SUITABLE BEARING CONDITIONS EXIST AT THE SUBGRADE LEVEL. SHOULD SOFT OR OTHERWISE UNSUITABLE CONDITIONS BE ENCOUNTERED ALONG THE PIPE ALIGNMENTS, THESE MATERIALS SHOULD BE UNDERCUT AS DIRECTED BY THE GEOTECHNICAL ENGINEER. THE UNDERCUT MATERIALS SHALL BE REPLACED WITH ADEQUATELY COMPACTED STRUCTURAL FILL, LEAN CONCRETE OR FLOWABLE FILL AS DIRECTED BY THE ON-SITE GEOTECHNICAL ENGINEER.

7. IN ORDER TO HELP PROTECT THE SOIL SUBGRADE FROM DETERIORATION (DUE TO EXPOSURE, RAINFALL, SEEPAGE, AND RUNOFF) BEFORE THE CRADLE CAN BE POURED, IT IS STRONGLY RECOMMENDED THAT A 3" TO 4" THICK CONCRETE MUD MAT BE POURED OVER THE SUBGRADE ONCE IT IS APPROVED BY THE ON-SITE GEOTECHNICAL ENGINEER. THE MUD MAT WILL ALSO PROVIDE BEARING FOR THE BLOCKS THAT TEMPORARILY SUPPORT THE SPILLWAY PIPE UNTIL THE CRADLE CAN BE POURED. THE METHOD OF BLOCK SUPPORT FOR THE PIPE PROPOSED BY THE CONTRACTOR SHOULD BE SUBMITTED TO THE JOHN R. McADAMS COMPANY FOR REVIEW.

8. BEGIN CONSTRUCTION OF THE NEW EMBANKMENT. FILL MATERIALS SHALL BE PLACED IN MAXIMUM 8" THICK LIFTS PRIOR TO COMPACTION, UNLESS DIRECTED OTHERWISE BY THE ON-SITE GEOTECHNICAL ENGINEER. FILL LIFTS SHALL BE CONTINUOUS OVER THE ENTIRE LENGTH OF FILL. IF IT IS NECESSARY, THE EMBANKMENT FILL MATERIAL WILL BE OVERBUILT IN HORIZONTAL LIFTS AND CUT BACK TO FINAL GRADE IN ORDER TO ACHIEVE PROPER COMPACTION.

9. AS CONSTRUCTION OF THE EMBANKMENT MOVES FORWARD, IT WILL BE NECESSARY TO INSTALL THE CONCRETE CRADLE. SEE NOTE ON CRADLE DETAIL (SHEET C9.XX). THIS MAY BE CONSTRUCTED USING ONE OF THE FOLLOWING METHODS:
   A. IF THE PROPOSED STRUCTURAL FILL MATERIAL IS UTILIZED AS THE FORMWORK FOR THE CONCRETE CRADLE, THEN THE STRUCTURAL FILL SHOULD BE INSTALLED AND COMPACTED UP TO THE TOP OF CONCRETE CRADLE ELEVATION. ONCE THE STRUCTURAL FILL REACHES THE NEXT DOWNSTREAM JUNCTION BOX OR HEADWALL AND IS COMPACTED TO THE ELEVATION OF THE TOP OF THE CONCRETE CRADLE, EXCAVATE THE CONCRETE CRADLE TRENCH PER THE PROVIDED DETAILS AND CONSTRUCT THE CONCRETE CRADLE AS PER THE PROVIDED CONCRETE CRADLE DETAIL.
   B. IF THE PROPOSED STRUCTURAL FILL IS NOT UTILIZED AS THE FORMWORK FOR THE CONCRETE CRADLE, THEN PRIOR TO CONSTRUCTING THE STRUCTURAL FILL EMBANKMENT, THE FORMWORK FOR THE CONCRETE CRADLE SHOULD BE INSTALLED ON EXISTING GROUND AND/OR THE MUD MAT. THE CONCRETE CRADLE SHALL BE CONSTRUCTED PER THE PROVIDED DETAILS

10. AS AN ALTERNATE TO A CONCRETE CRADLE UNDER THE BARREL PIPE (SEE SHEET C9.XX), THE CONTRACTOR MAY CHOOSE TO ELIMINATE THE CONCRETE CRADLE AND USE COMPACTED BACKFILL IF THE ON-SITE GEOTECHNICAL ENGINEER WILL PROVIDE A NC PE SEALED LETTER CERTIFYING THAT THE COMPACTION UNDER, AROUND, AND ABOVE THE BARREL MEETS THE SPECIFICATIONS OF THE EMBANKMENT COMPACTION REQUIREMENTS AND MOISTURE CONTENT. THIS CERTIFICATION LETTER MUST BE SUBMITTED TO THE DESIGN ENGINEER PRIOR TO BACKFILL. THIS SEPARATE CERTIFICATION MUST BE SPECIFIC TO THE BARREL PIPE FOR THE FACILITY, AND MUST CLEARLY STATE THAT ALL SOIL MATERIAL UNDER, AROUND, AND ABOVE THE BARREL PIPE MEETS THE BERM AND SOIL COMPACTION SPECIFICATIONS ON THIS SHEET. THIS CERTIFICATION IS TO INCLUDE REFERENCE TO BOTH MATERIAL AND COMPACTION, AND MUST STATE THAT ALL MATERIALS UNDER, AROUND, AND ABOVE THE BARREL HAVE BEEN COMPACTED PER THE BERM MATERIAL SPECIFICATIONS (AT LEAST 95% OF MAXIMUM DRY DENSITY USING ASTM D698 STANDARD PROCTOR) WITH NO VOID SPACES PRESENT. THE CONTRACTORS INTENT TO UTILIZE THIS ALTERNATIVE MUST BE STATED PRIOR TO CONSTRUCTION TAKING PLACE. THIS CONTRACTORS CERTIFICATION MUST BE PRESENTED TO THE DESIGN ENGINEER BEFORE AN AS-BUILT CERTIFICATION CAN BE ISSUED FOR THIS FACILITY.

11. INSTALL RISER / BARREL ASSEMBLY, ALONG WITH THE EMERGENCY DRAIN SYSTEM. INSTALL 30" RCP OUTLET BARREL SPILLWAY FILTER FROM THE DETAILS SHOWN ON SHEET C9.XX.

12. CONSTRUCT EMBANKMENT PER SPECIFICATIONS LISTED IN THE SECTION TITLED "BERM AND SOIL COMPACTION SPECIFICATIONS" AND REQUIREMENTS OF THE ON-SITE GEOTECHNICAL ENGINEER. ALL CHARACTERISTICS OF THE EMBANKMENT FILL MATERIAL SHALL MEET THE STANDARDS SET FORTH IN "BERM AND SOIL COMPACTION SPECIFICATIONS", INCLUDING COMPACTION AND MOISTURE REQUIREMENTS. IF NECESSARY TO ACHIEVE PROPER COMPACTION, THE EMBANKMENT FILL MATERIAL WILL BE OVERBUILT IN HORIZONTAL LIFTS AND CUT BACK TO PROPER FINAL GRADE. ANY HAND COMPACTION ACTIVITIES AROUND SPILLWAY OR DRAIN STRUCTURES SHALL BE CONDUCTED IN 4-INCH LOOSE LIFTS AND BE TO THE SAME COMPACTION AND MOISTURE REQUIREMENTS AS THE ENTIRE EMBANKMENT. ALL COMPACTION AND MOISTURE TESTING SHALL BE CARRIED OUT AS DIRECTED BY THE ON-SITE GEOTECHNICAL ENGINEER AND AS LISTED IN THE SECTION TITLED "BERM AND SOIL COMPACTION SPECIFICATIONS".

13. UPON COMPLETION OF DAM EMBANKMENT, PROMPTLY STABILIZE AND SEED DAM EMBANKMENT PER SEEDING SCHEDULE. PERMANENT GROUND COVER SHALL BE ESTABLISHED PER THE PERMANENT SEEDING SCHEDULE FOUND ON SHEET C9.XX.

14. SCHEDULE A FINAL AS-BUILT INSPECTION AND AS-BUILT SURVEY WITH THE ENGINEER AND SURVEYOR. AN AS-BUILT INSPECTION AND SURVEY SHALL BE SCHEDULED BEFORE IMPOUNDING WATER IN THE FACILITY AND A MINIMUM OF 60 DAYS PRIOR TO THE ANTICIPATED DATE OF CERTIFICATION APPROVAL. ANY COMMENTS OR DEFICIENCIES IN THE SCM CONSTRUCTION MUST BE CORRECTED TO THE SATISFACTION OF THE ENGINEER AND OWNER BEFORE CERTIFICATION SHALL BE GRANTED.

BERM AND SOIL COMPACTION SPECIFICATIONS

1. PRIOR TO CONSTRUCTION, THE ON-SITE GEOTECHNICAL ENGINEER SHALL IDENTIFY BORROW / FILL AREAS AND VERIFY THEIR SUITABILITY FOR USE WITHIN THE DAM EMBANKMENT. ALSO, THE ON-SITE GEOTECHNICAL ENGINEER SHALL PERFORM STANDARD PROCTORS ON THE PROPOSED BORROW MATERIAL TO ENSURE THAT OPTIMUM MOISTURE CONTENT AND COMPACTION CAN BE ACHIEVED / CONTROLLED DURING CONSTRUCTION.

2. ALL FILL MATERIALS TO BE USED FOR THE DAM EMBANKMENT SHALL BE TAKEN FROM BORROW AREAS APPROVED BY THE ON-SITE GEOTECHNICAL ENGINEER. THE FILL MATERIAL SHALL BE FREE FROM ROOTS, STUMPS, WOOD, STONES GREATER THAN 6", AND FROZEN OR OTHER OBJECTIONABLE MATERIAL. THE FOLLOWING SOIL TYPES ARE SUITABLE FOR USE AS FILL WITHIN THE DAM EMBANKMENT AND KEY TRENCH: ML AND CL. ALL FILL MATERIALS SHALL BE APPROVED BY THE ONSITE GEOTECHNICAL ENGINEER FOR THE INTENDED USE.

3. FILL PLACEMENT FOR THE EMBANKMENT SHALL NOT EXCEED A MAXIMUM 8" LIFT (UNCOMPACTED). EACH LIFT SHALL BE CONTINUOUS FOR THE ENTIRE LENGTH OF EMBANKMENT. BEFORE PLACEMENT OF FILL FOR THE BERM SECTION, ALL UNSUITABLE MATERIAL SHALL BE REMOVED AND THE SURFACE PROPERLY PREPARED FOR FILL PLACEMENT. FILL MATERIAL ADJACENT TO ALL SPILLWAY AND DRAINAGE STRUCTURES SHALL BE PLACED IN 4-INCH (UNCOMPACTED) LIFTS AND HAND-COMPACTED TO THE SAME COMPACTION AND MOISTURE REQUIREMENTS AS THE ENTIRE EMBANKMENT.

4. ALL FILL SOILS USED IN THE EMBANKMENT CONSTRUCTION SHALL BE COMPACTED TO AT LEAST 95% OF THE STANDARD PROCTOR MAXIMUM DRY DENSITY (ASTM D-698). THE FILL SOILS SHALL BE COMPACTED AT A MOISTURE CONTENT WITHIN -3 TO +3 PERCENT OF ITS OPTIMUM MOISTURE CONTENT. COMPACTION TESTS SHALL BE PERFORMED BY THE ON-SITE GEOTECHNICAL ENGINEER DURING CONSTRUCTION TO VERIFY THAT THE PROPER COMPACTION LEVEL HAS BEEN REACHED. THE FILL SHOULD BE COMPACTED USING A SHEEPSFOOT TYPE COMPACTOR. IN ORDER TO PREVENT DAMAGE TO THE PIPE, NO COMPACTION EQUIPMENT SHALL CROSS ANY PIPE UNTIL MINIMUM COVER IS ESTABLISHED ALONG THE PIPE.

5. THE DESIGN ENGINEER SHALL BE PROVIDED WITH REPORTS AND CERTIFICATION, BY THE ON-SITE GEOTECHNICAL ENGINEER, THAT THE GEOTECHNICAL ASPECTS OF THE FACILITY HAVE BEEN CONSTRUCTED PER PLAN. THIS CERTIFICATION MUST ADDRESS THE TESTING FOR MATERIALS AND COMPACTION OF THE DAM EMBANKMENT AND SPILLWAY. THESE REPORTS AND CERTIFICATION WILL BE NEEDED DURING THE AS-BUILT CERTIFICATION PROCESS FOR THIS STORMWATER CONTROL MEASURE. THEREFORE, IT SHALL BE THE CONTRACTOR'S RESPONSIBILITY TO COORDINATE TESTING AND OBSERVATION WITH THE ON-SITE GEOTECHNICAL ENGINEER.

6. TESTING OF THE NEW FILL MATERIALS SHALL BE PERFORMED TO VERIFY THAT THE RECOMMENDED LEVEL OF COMPACTION IS ACHIEVED DURING CONSTRUCTION. THEREFORE, ONE DENSITY TEST SHALL BE PERFORMED FOR EVERY 2,500 SQUARE FEET OF AREA FOR EVERY LIFT OF FILL OR AS RECOMMENDED BY THE ON-SITE GEOTECHNICAL ENGINEER.

7. TESTING WILL BE REQUIRED ALONG THE 30"Ø RCP OUTLET BARREL AT A FREQUENCY OF ONE TEST PER 25 LF OF PIPE PER VERTICAL FOOT OF FILL OR AS DIRECTED BY THE ON-SITE GEOTECHNICAL ENGINEER.

STATEMENT OF RESPONSIBILITY

1. ALL REQUIRED MAINTENANCE AND INSPECTIONS OF THE STORMWATER CONTROL MEASURE SHALL BE THE RESPONSIBILITY OF THE OWNER, PER THE EXECUTED OPERATION AND MAINTENANCE AGREEMENT FOR THIS FACILITY.

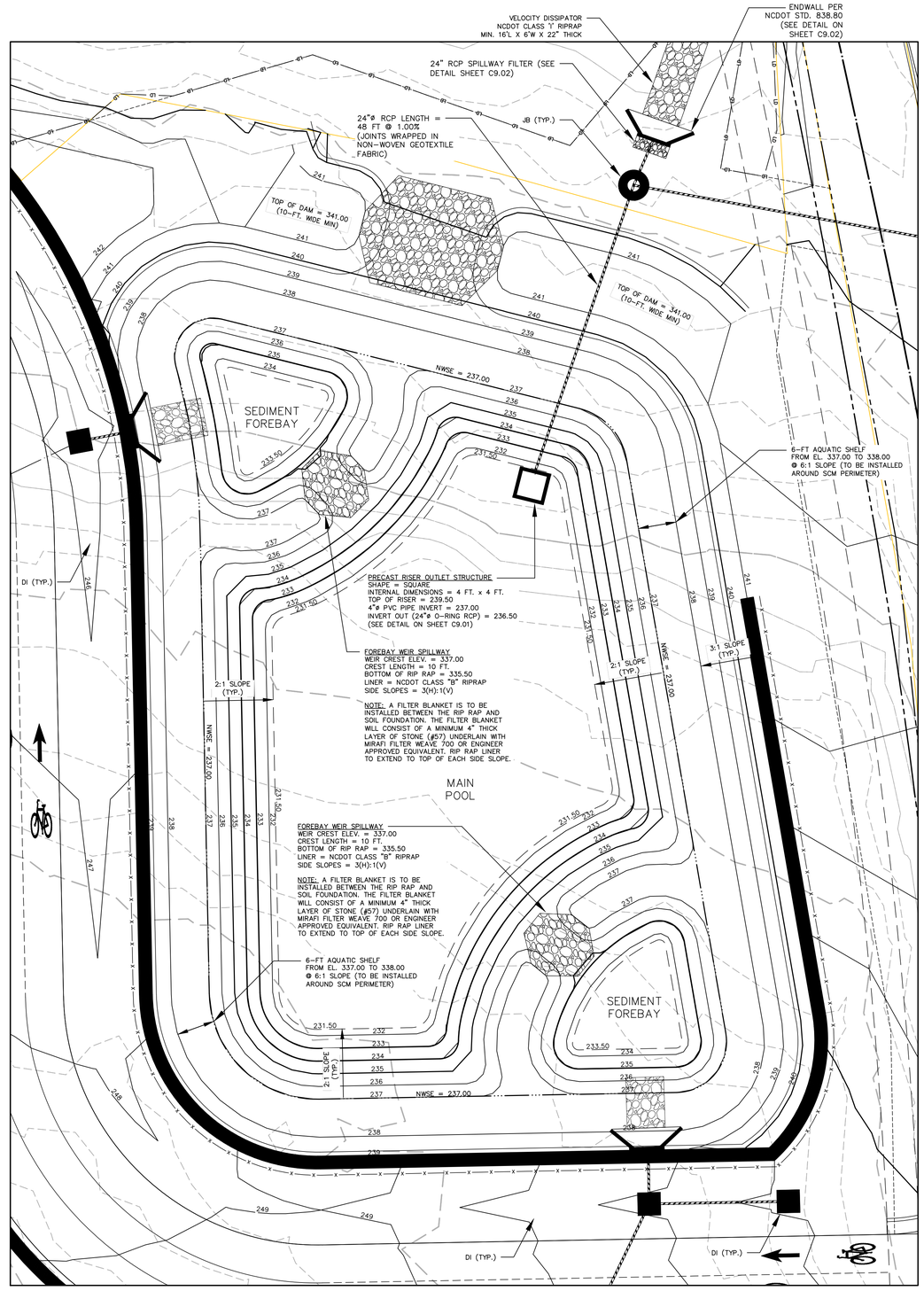

STORMWATER CONTROL MEASURE 'A' PLAN VIEW

1" = 10'

SEE SHEET C6.00 FOR ALL PROJECT, SITE, GRADING, STORM DRAINAGE AND UTILITY NOTES

ALL CONSTRUCTION SHALL BE IN ACCORDANCE WITH THE CURRENT CITY OF RALEIGH AND NCDOT (WHERE APPLICABLE) ENGINEERING DESIGN AND CONSTRUCTION STANDARDS

McADAMS
The John R. McAdams Company, Inc.
621 Hillsborough Street
Suite 500
Raleigh, NC 27603
phone 919. 361. 5000
fax 919. 361. 2269
license number: C-0293, C-187
www.mcadamsco.com

CLIENT

HALLE BUILDING GROUP
56 HUNTER STREET, STE. 110
APEX, NC 27502
ERIC RIFKIN
PHONE: 919. 387. 1885

Halle BUILDING GROUP

5000 LOUISBURG ROAD
ADMINISTRATIVE SITE REVIEW
5000 LOUISBURG ROAD
RALEIGH, NC

REVISIONS

NO.	DATE
1	
2	
3	
4	
5	
6	

PLAN INFORMATION

PROJECT NO.	HLE-23002
FILENAME	HLE23002-ARS-SW-A
CHECKED BY	JCM
DRAWN BY	RJF
SCALE	1" = 10'
DATE	02. 09. 2024

SHEET

STORMWATER CONTROL MEASURE ''A'' PLAN VIEW

C9.00

M:\Projects\HLE\HLE23002\04-Production\Engineering\Production Drawings\Administrative Site Review\HLE23002-ARS-SW-A.dwg, 2/9/2024 4:34:02 PM, Savana Bennett

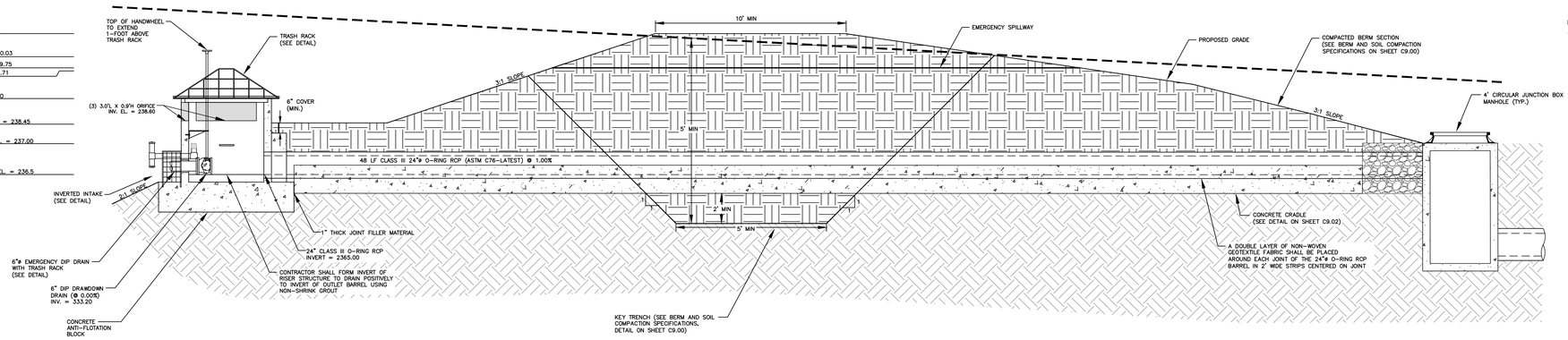

NOTE:

1. REMOVED TOPSOIL SHALL BE STOCKPILED FOR USE IN PLANTING (SEEDING) THE DAM EMBANKMENT ONCE FINAL GRADES (AS SHOWN ON THE GRADING PLAN) HAVE BEEN ESTABLISHED WITH COMPACTED FILL. PRIOR TO TOPSOIL INSTALLATION, THE CONTRACTOR SHALL SCARIFY THE TOP 2~ TO 3~INCHES OF THE BERM SECTION TO PROMOTE BONDING OF THE TOPSOIL WITH THE COMPACTED FILL. THE TOPSOIL DEPTH SHALL RANGE FROM 3~ TO 4~INCHES ON THE DAM EMBANKMENT.

PERMANENT DAM CROSS SECTION

N.T.S.

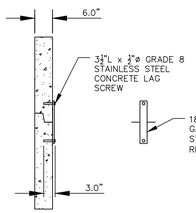

RISER JOINT CONNECTION DETAIL

N.T.S.

NOTES:

1. CONCRETE ANTI-FLOTATION BLOCK TO BE PROVIDED WITH MINIMUM TEMPERATURE AND SHRINKAGE STEEL REINFORCEMENT.
2. TRASH RACKS NOT SHOWN FOR CLARITY.
3. THE NUMBER OF GUIDES FOR THE VALVE STEM SHALL BE DETERMINED IN THE FIELD BY THE CONTRACTOR. THE VALVE STEM MUST BE OPERABLE FROM THE TOP OF THE RISER VIA THE HANDWHEEL WITH AN INSIGNIFICANT AMOUNT OF PLAY IN THE VALVE STEM.
4. CONTRACTOR SHALL PROVIDE A JOINT IN THE OUTLET BARREL NO MORE THAN 5~FT FROM THE RISER.

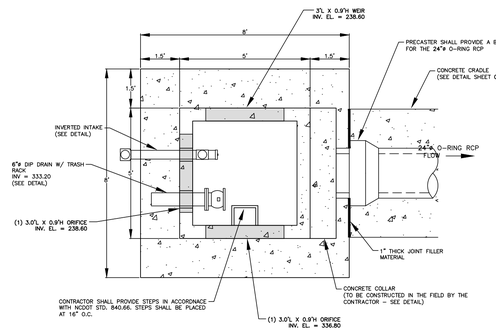

NOTES:

1. ALL REBAR TO BE #4 REBAR.
2. ALL REBAR AND ANGLES TO BE HOT-DIPPED GALVANIZED AND BE PROVIDED WITH AN EPOXY COATING.
3. THE HOT-DIPPED, GALVANIZED 2"x2"x1/4" ANGLES SHALL BE WELDED TO THE REBAR TRASH RACK. ONCE WELDED, THE ENTIRE ASSEMBLY SHALL BE PLACED ONTO THE RISER WITH ANGLES SITTING DIRECTLY ON TOP OF RISER.
4. CONTRACTOR SHALL ANCHOR THE TRASH RACK TO MANHOLE WALL WITH FOUR 4"x1/4" CONCRETE ANCHOR BOLTS THROUGH ANGLES.
5. CONTRACTOR SHALL OMIT OR ADJUST REBAR AS NECESSARY TO ALLOW FOR CONCRETE COLLAR.
6. ACCESS HATCH SHALL ALIGN WITH STEPS IN RISER.

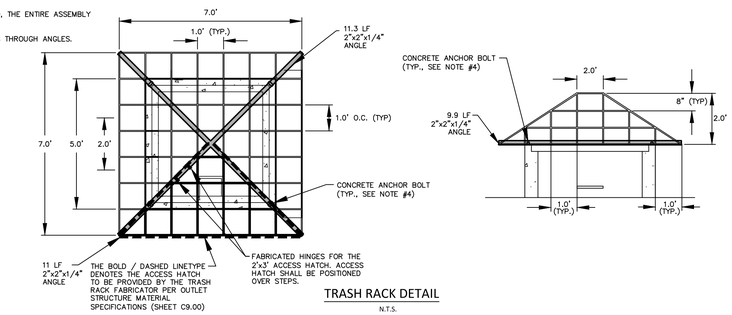

TRASH RACK DETAIL

N.T.S.

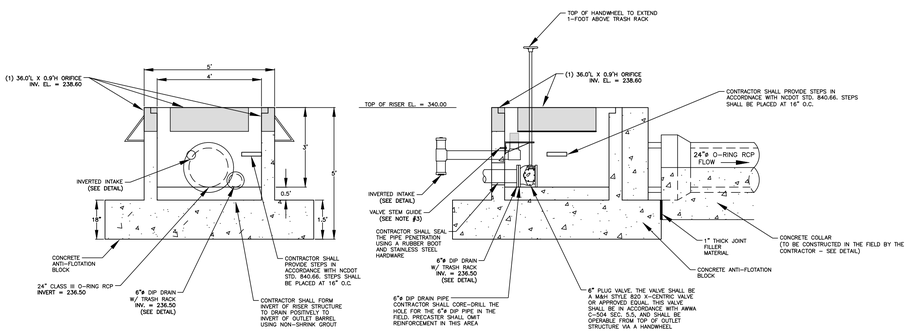

PERMANENT OUTLET STRUCTURE DETAILS

N.T.S.

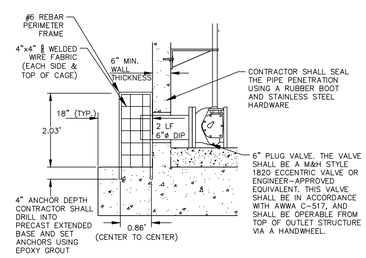

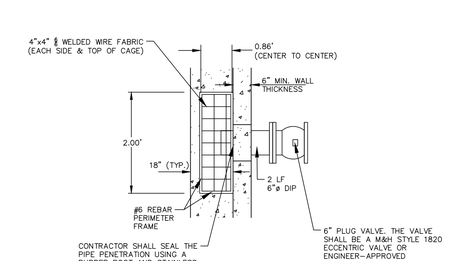

6"Ø EMERGENCY DIP DRAIN TRASH RACK DETAILS

N.T.S.

NOTES:

1. ALL REBAR TO BE #4 REBAR.
2. WRAP OUTSIDE OF PIPE WITH VOLCLAY WATERSTOP-RX® 101 (OR PRE-APPROVED EQUIVALENT) AT THE FACE OF THE PRECAST STRUCTURE WALL. PROVIDE 6" OVER LAP ON THE BOTTOM OF THE PIPE.

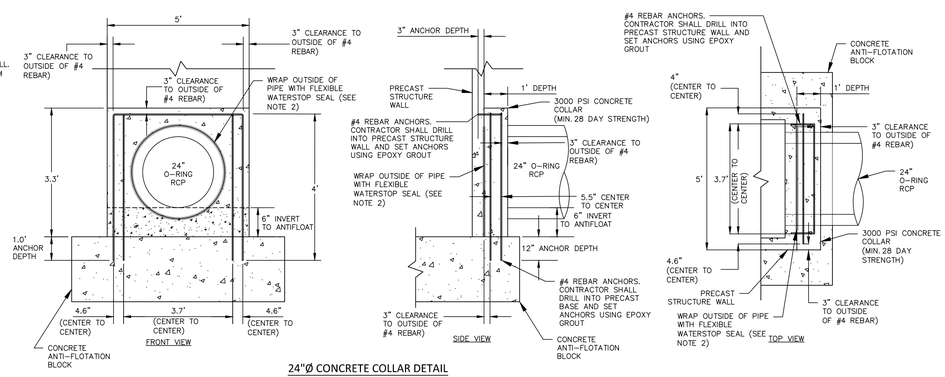

24"Ø CONCRETE COLLAR DETAIL

N.T.S.

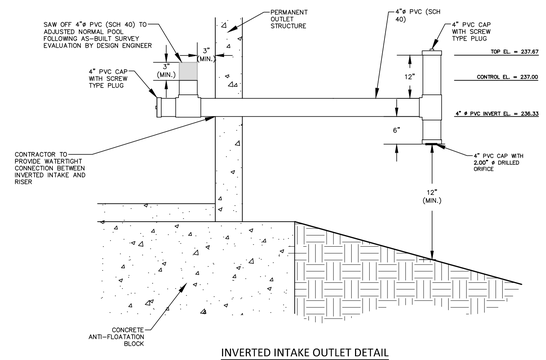

INVERTED INTAKE OUTLET DETAIL

N.T.S.

SEE SHEET C6.00 FOR ALL PROJECT, SITE, GRADING, STORM DRAINAGE AND UTILITY NOTES

ALL CONSTRUCTION SHALL BE IN ACCORDANCE WITH THE CURRENT CITY OF RALEIGH AND NCDOT (WHERE APPLICABLE) ENGINEERING DESIGN AND CONSTRUCTION STANDARDS

McADAMS

The John R. McAdams Company, Inc.
621 Hillsborough Street
Suite 500
Raleigh, NC 27603

phone 919. 361. 5000
fax 919. 361. 2269
license number: C-0293, C-187

www.mcadamsco.com

CLIENT

HALLE BUILDING GROUP
56 HUNTER STREET, STE. 110
APEX, NC 27502
ERIC RIFKIN
PHONE: 919. 387. 1885

Halle BUILDING GROUP

5000 LOUISBURG ROAD
ADMINISTRATIVE SITE REVIEW
5000 LOUISBURG ROAD
RALEIGH, NC

[redacted]

REVISIONS

NO.	DATE
1	
2	
3	
4	
5	
6	

PLAN INFORMATION

PROJECT NO.	HLE-23002
FILENAME	HLE23002-ARS-SW-A
CHECKED BY	JCM
DRAWN BY	RJF
SCALE	NTS
DATE	02. 09. 2024

SHEET

STORMWATER CONTROL MEASURE "A" DETAILS

C9.01

M:\Projects\HLE\HLE23002\04-Production\Engineering\Production Drawings\Current Drawings\Administrative Site Review\HLE23002-ARS-SW-A.dwg, 2/9/2024 4:34:15 PM, Savana Bennett

NOTES:

1. ALL REINFORCING STEEL IN RISER ANTI-FLOTATION BLOCK TO BE GRADE 60 #6 BARS FOR HORIZONTAL CROSSING AND GRADE 60 #4 BARS FOR VERTICAL CONNECTIONS.
2. INSIDE OF RISER BOTTOM TO BE FORMED WITH NON-SHRINK GROUT TO INVERT ELEVATION OF BARREL.
3. ALL PIPE PENETRATIONS THROUGH THE CONCRETE RISER STRUCTURE SHALL BE MADE WATERTIGHT.

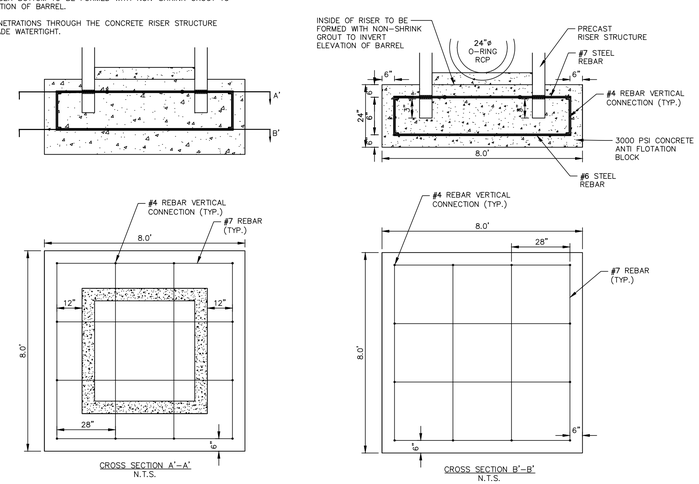

RISER/ANTI-FLOTATION BLOCK CONNECTION

N.T.S.

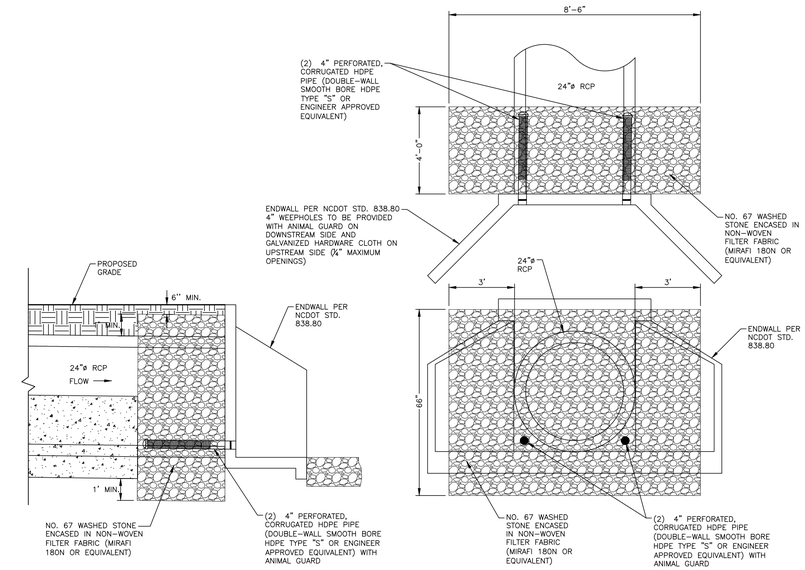

24" SPILLWAY FILTER DETAIL

N.T.S.

NOTES:

1. A FILTER BLANKET IS TO BE INSTALLED BETWEEN THE RIPRAP AND SOIL FOUNDATION. THE FILTER BLANKET WILL CONSIST OF A MINIMUM 4" THICK LAYER OF STONE (NCDOT #57) UNDERLAIN WITH MIRAFI FILTER WEAVE 700 OR ENGINEER-APPROVED EQUIVALENT.
2. RIPRAP TO EXTEND TO TOP OF CHANNEL WITH 2:1 SIDE SLOPES THROUGHOUT THE EXTENT OF CHANNEL.
3. RIPRAP TO EXTEND TO THE EDGE OF WETLAND

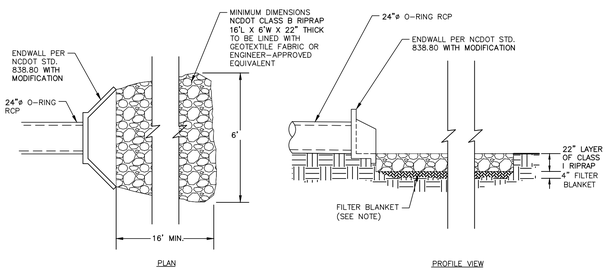

OUTLET BARREL VELOCITY DISSIPATER

N.T.S.

NOTE:

1. CONTRACTOR SHALL PROVIDE A JOINT IN THE OUTLET BARREL NO MORE THAN 5-FT FROM THE RISER.

BARREL PIPE CONCRETE CRADLE CONSTRUCTION SEQUENCE

1. IF OPTION A IS CHOSEN FROM NOTE 9 OF THE OUTLET STRUCTURE MATERIAL SPECIFICATIONS, THEN BRING GRADE OF DAM EMBANKMENT TO SPRINGLINE OF PIPE ELEVATION. IF OPTION B IS CHOSEN FROM NOTE 9 OF THE OUTLET STRUCTURE MATERIAL SPECIFICATIONS, THEN CONSTRUCT FORMWORK FOR CONCRETE CRADLE ON EXISTING GRADE.
2. IF OPTION A IS CHOSEN FROM NOTE 9 OF THE OUTLET STRUCTURE MATERIAL SPECIFICATIONS, THEN EXCAVATE TRENCH FOR CRADLE AND BARREL PER DIMENSIONS ON DRAWINGS. IF OPTION B IS CHOSEN FROM NOTE 9 OF THE OUTLET STRUCTURE MATERIAL SPECIFICATIONS, PROCEED TO STEP 3 BELOW.
3. PLACE BARREL PIPE ON CONCRETE BLOCKS TO GRADE. AT THIS STEP, CONTRACTOR SHALL WRAP A DOUBLE LAYER OF NON-WOVEN GEOTEXTILE FABRIC AROUND EACH JOINT OF THE 24"ø O-RING RCP BARREL IN 2' WIDE STRIPS CENTERED ON JOINT.
4. PLACE CONCRETE FOR CRADLE FOR EACH SECTION FROM ONE SIDE OF THE TRENCH. ALLOW CONCRETE TO FILL ENTIRE AREA UNDER PIPE AND PIPE HAUNCHES AS TO LEAVE NO VOIDS UNDER THE PIPE BEFORE PLACING CONCRETE ON THE OPPOSITE SIDE OF THE TRENCH. PLACE ENTIRE CRADLE AS ONE LIFT (VERTICALLY) PER DRAWINGS.
5. CONCRETE CRADLE MAY BE ELIMINATED PER RECOMMENDATION FROM THE ON-SITE GEOTECHNICAL ENGINEER. ANY DEVIATION FROM THIS DETAIL SHALL BE SUBMITTED TO AND REVIEWED BY THE DESIGN ENGINEER PRIOR TO IMPLEMENTATION. IF THE CRADLE IS ELIMINATED, THEN A LETTER FROM AN NC PE CERTIFYING THAT ALL SOIL MATERIAL UNDER, AROUND, AND ABOVE THE BARREL PIPE MEETS THE BERM MATERIAL SPECIFICATIONS IS REQUIRED.
6. ALLOW CRADLE TO CURE FOR A MINIMUM OF 7 DAYS BEFORE ANY VIBRATING COMPACTION EQUIPMENT IS USED IN THE VICINITY OF THE BARREL PIPE.
7. TRENCH TO BE BACKFILLED IN 5" LIFTS WHEN COMPACTION IS BY HAND. BACKFILL IS IN 8" LIFTS WHEN CONDUCTED BY MACHINE. MINIMUM OF 2 FEET COVER MUST BE PRESENT ON 24"ø RCP BEFORE DRIVING OVER WITH HEAVY EQUIPMENT.

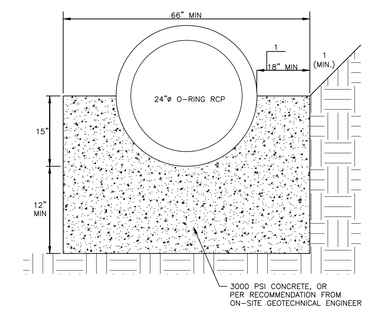

24" CONCRETE CRADLE DETAIL

N.T.S.

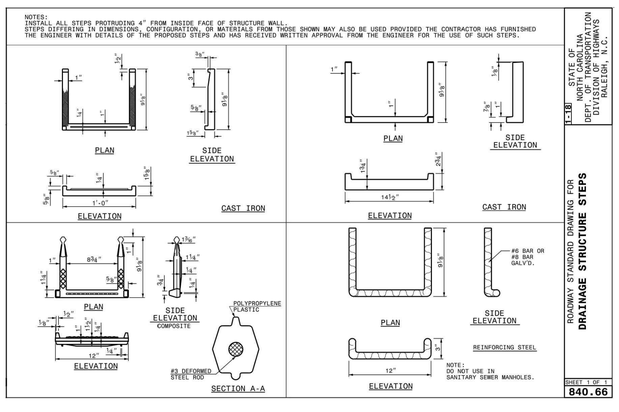

MAINTENANCE ACCESS STEPS

N.T.S.

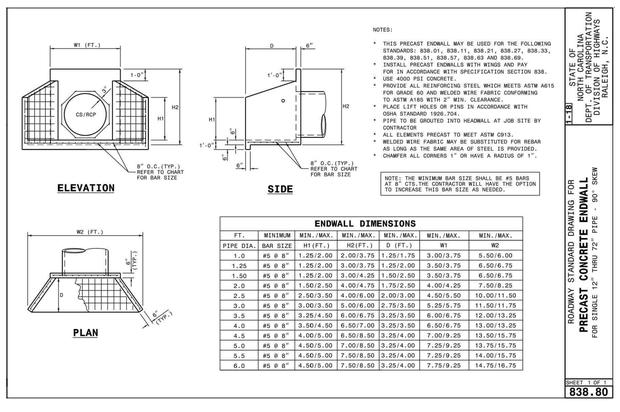

ENDWALL DIMENSIONS

FT.	MINIMUM	MIN./MAX.	MIN./MAX.	MIN./MAX.	MIN./MAX.	MIN./MAX.
PIPE DIA.	BAR SIZE	H1(FT.)	H2(FT.)	D (FT.)	W1	W2
1.0	#5 @ 8"	1.25/2.00	2.00/3.75	1.25/1.75	3.00/3.75	5.50/6.00
1.25	#5 @ 8"	1.25/2.00	3.00/3.75	1.25/2.00	3.50/3.75	6.50/6.75
1.50	#5 @ 8"	1.25/2.00	3.00/4.25	1.50/2.50	3.50/3.75	6.50/6.75
2.0	#5 @ 8"	1.50/2.50	4.00/4.75	1.75/2.50	4.00/4.25	7.50/8.25
2.5	#5 @ 8"	2.50/3.50	4.00/6.00	2.00/3.00	4.50/5.50	10.00/11.50
3.0	#5 @ 8"	3.00/3.50	5.00/6.00	2.75/3.50	5.25/5.75	11.50/11.75
3.5	#5 @ 8"	3.25/4.50	6.00/6.75	3.25/3.50	6.00/6.75	12.00/13.25
4.0	#5 @ 8"	3.50/4.50	6.50/7.00	3.25/3.50	6.50/6.75	13.00/13.25
4.5	#5 @ 8"	4.00/5.00	6.50/8.50	3.25/4.00	7.00/9.25	13.50/15.75
5.0	#5 @ 8"	4.50/5.00	7.00/8.50	3.25/4.00	7.25/9.25	13.75/15.75
5.5	#5 @ 8"	4.50/5.00	7.50/8.50	3.25/4.00	7.25/9.25	14.00/15.75
6.0	#5 @ 8"	4.50/5.00	7.50/8.50	3.25/4.00	7.75/9.25	14.75/16.75

OUTLET ENDWALL DETAILS

N.T.S.

SEE SHEET C6.00 FOR ALL PROJECT, SITE, GRADING, STORM DRAINAGE AND UTILITY NOTES

ALL CONSTRUCTION SHALL BE IN ACCORDANCE WITH THE CURRENT CITY OF RALEIGH AND NCDOT (WHERE APPLICABLE) ENGINEERING DESIGN AND CONSTRUCTION STANDARDS

MCADAMS

The John R. McAdams Company, Inc.
621 Hillsborough Street
Suite 500
Raleigh, NC 27603

phone 919. 361. 5000
fax 919. 361. 2269
license number: C-0293, C-187

www.mcadamsco.com

CLIENT

HALLE BUILDING GROUP
56 HUNTER STREET, STE. 110
APEX, NC 27502
ERIC RIFKIN
PHONE: 919. 387. 1885

Halle BUILDING GROUP

5000 LOUISBURG ROAD
ADMINISTRATIVE SITE REVIEW
5000 LOUISBURG ROAD
RALEIGH, NC

[redacted]

REVISIONS

DATE

PLAN INFORMATION

PROJECT NO.	HLE-23002
FILENAME	HLE23002-ARS-SW-A
CHECKED BY	JCM
DRAWN BY	RJF
	NTS
	02. 09. 2024

SHEET

STORMWATER CONTROL MEASURE "A" DETAILS

C9.02

M:\Projects\HLE\HLE23002\04-Production\Engineering\Production Drawings\Current Drawings\Administrative Site Review\HLE23002-ARS-SW-A.dwg, 2/9/2024 4:34:24 PM, Savana Bennett

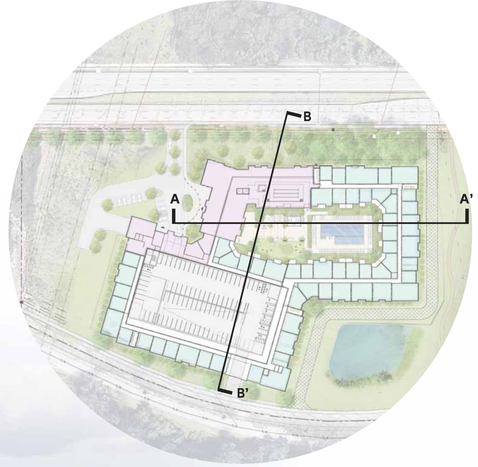

KEY PLAN

SECTION A-A'

SCALE: 1/16"=1'-0"

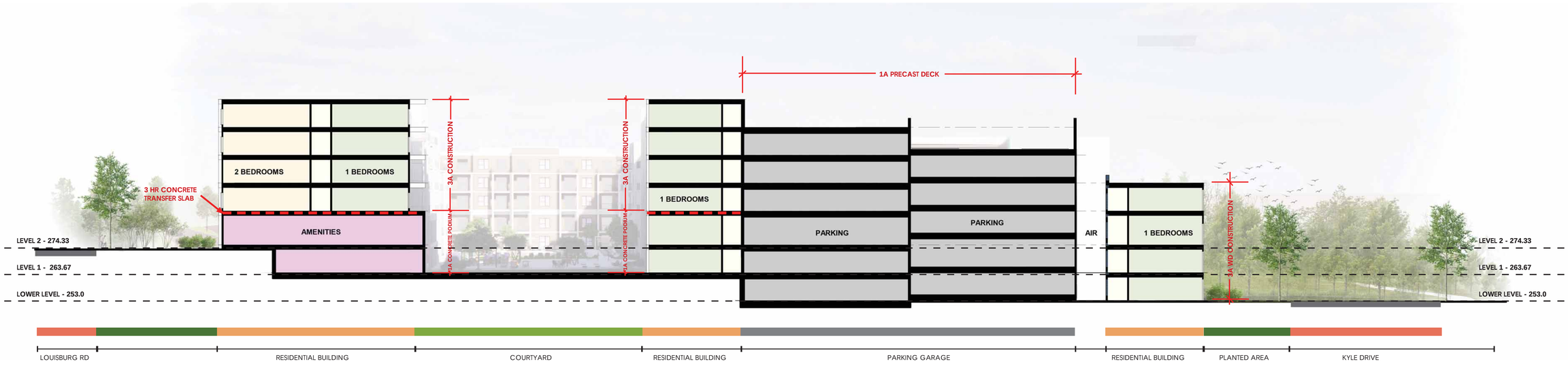

SECTION B-B'

SCALE: 1/16"=1'-0"

LOUISBURG RD APARTMENTS

RALEIGHT, NORTH CAROLINA | NOVEMBER 02,2023

copyright (c) by Ci Design, Inc. / all rights reserved

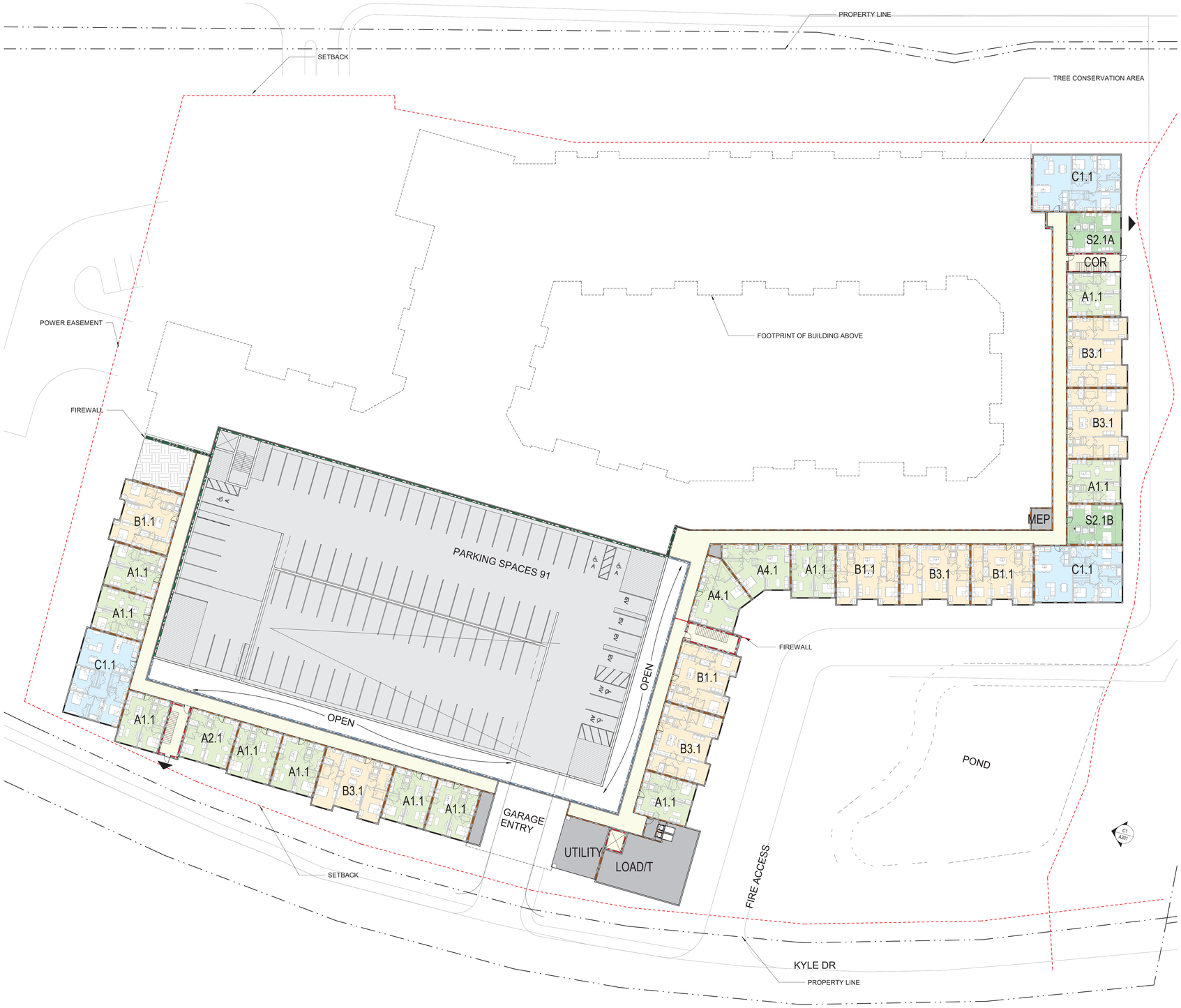

LOWER LEVEL PLAN

SCALE: 1/16"=1'-0"

LOUISBURG RD APARTMENTS | SCHEMATIC DESIGN

RALEIGH, NORTH CAROLINA | NOVEMBER 02, 2023

copyright (c) by Ci Design, Inc. / all rights reserved

LEVEL 1 PLAN

SCALE: 1/16"=1'-0"

LOUISBURG RD APARTMENTS | SCHEMATIC DESIGN

RALEIGH, NORTH CAROLINA | NOVEMBER 02, 2023

copyright (c) by Ci Design, Inc. / all rights reserved

LEVEL 2PLAN

SCALE: 1/16"=1'-0"

LOUISBURG RD APARTMENTS | SCHEMATIC DESIGN

RALEIGH, NORTH CAROLINA | NOVEMBER 02, 2023

copyright (c) by Ci Design, Inc. / all rights reserved

LEVEL 3 & 4 PLAN

SCALE: 1/16"=1'-0"

LOUISBURG RD APARTMENTS | SCHEMATIC DESIGN

RALEIGH, NORTH CAROLINA | NOVEMBER 02, 2023

copyright (c) by Ci Design, Inc. / all rights reserved

LEVEL 5 PLAN

SCALE: 1/16"=1'-0"

LOUISBURG RD APARTMENTS | SCHEMATIC DESIGN

RALEIGH, NORTH CAROLINA | NOVEMBER 02, 2023

copyright (c) by Ci Design, Inc. / all rights reserved

LEVEL 6 PLAN

SCALE: 1/16"=1'-0"

LOUISBURG RD APARTMENTS | SCHEMATIC DESIGN

RALEIGH, NORTH CAROLINA | NOVEMBER 02, 2023

copyright (c) by Ci Design, Inc. / all rights reserved

1 - NORTH ELEVATION

2 - WEST ELEVATION

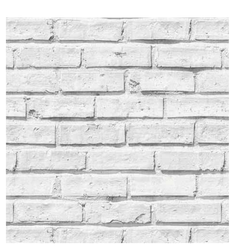

BRICK 1

BRICK 2

BRICK 3

CEMENTITIOUS PANEL 1

CEMENTITIOUS SIDING 1

CEMENTITIOUS SIDING 2

KEY PLAN

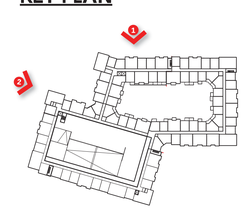

BUILDING ELEVATIONS

SCALE: 1/16"=1'-0"

LOUISBURG RD APARTMENTS | SCHEMATIC DESIGN

RALEIGH, NORTH CAROLINA | NOVEMBER 02, 2023

copyright (c) by Ci Design, Inc. / all rights reserved

1 - SOUTH ELEVATION

2 - EAST ELEVATION

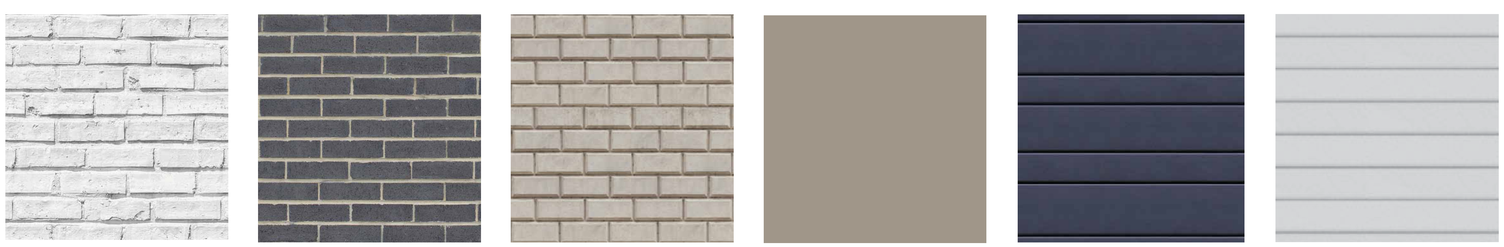

BRICK 1 **BRICK 2** **BRICK 3** **CEMENTITIOUS PANEL 1** **CEMENTITIOUS SIDING 1** **CEMENTITIOUS SIDING 2**

KEY PLAN

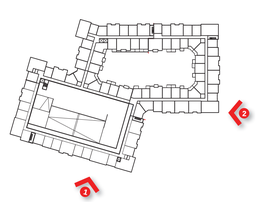

BUILDING ELEVATIONS

SCALE: 1/16"=1'-0"

LOUISBURG RD APARTMENTS | SCHEMATIC DESIGN

RALEIGH, NORTH CAROLINA | NOVEMBER 02, 2023

copyright (c) by Ci Design, Inc. / all rights reserved