Administrative Approval Action

Case File / Name: SUB-0045-2023
DSLC - BLUEJACK FALLS - 9 ACRE TRACT

City of Raleigh
Development Services Department
One Exchange Plaza
Raleigh, NC 27602
(919) 996-2492
currentplanning@raleighnc.gov
www.raleighnc.gov

LOCATION: This 8.09-acre site (BM2025 page 01498) is located at 2537 Wall Store Road. It is zoned R-4 and located east of Auburn Church Road, west of Rock Quarry Road, and south of Pearl Road. It is across from Pender Nursery on Wall Store Road. The majority of the site was annexed into the city limits on June 30, 2024. A 0.30 acre portion which was recombined into the larger tract on 8/7/25 is outside the city limits.

REQUEST: This is a compact subdivision consisting of 45 townhouse lots and 2 open space/HOA lots, for a total of 47 lots. The development will be accessed from Wall Store Road using "Street N" which is part of the adjacent proposed Bluejack Falls Subdivision (case SUB-0080-2022).

DESIGN ADJUSTMENT(S)/ ALTERNATES, ETC: N/A

FINDINGS: **City Administration finds that this request, with the below conditions of approval being met, conforms to the Unified Development Ordinance. This approval is based on a preliminary plan dated August 8, 2025 by McAdams Co.**

CONDITIONS OF APPROVAL and NEXT STEPS:

This document must be applied to the second sheet of all future submittals except for final plats. This is a preliminary plan and as such no permits have been issued with this approval. To obtain permits and/or completion of the project, the following steps are required:

☑ **SITE PERMITTING REVIEW** - For land disturbance of 12,000 square feet or greater, public or private infrastructure, shared stormwater devices, etc. Site Permitting Review may be submitted upon receipt of this signed approval document.

The following items are required prior to approval of Site Permitting Review plans:

General

1. SPR-0267-2023 must be approved prior to this subdivision's subsequent SPR approval.

2. Demonstrate compliance with the transitional protective yard requirement set forth in UDO Section 2.3.1.C.1. Provide details for any existing vegetation that will be used to meet associated planting requirements. In addition, identify the location of the proposed fence and provide a construction detail.

Engineering

3. Required NCDOT encroachment and/or driveway permits must be approved and copies provided to the City of Raleigh Transportation Department – Mobility Strategy and Infrastructure Division prior to Site Permit review approval.

Stormwater

City of Raleigh
Development Services Department
One Exchange Plaza
Raleigh, NC 27602
(919) 996-2492
currentplanning@raleighnc.gov
www.raleighnc.gov

4. A surety equal to of the cost of clearing, grubbing and reseeding a site, shall be paid to the City (UDO 9.4.4).

5. If required, a nitrogen offset payment must be made to a qualifying mitigation bank (UDO 9.2.2.B).

6. A stormwater control plan with a stormwater operations and maintenance manual and budget shall be approved (UDO 9.2).

Urban Forestry

7. Tree protection fence must be inspected by Urban Forestry staff prior to the issuance of a grading permit.

8. Submit a final tree conservation plan that includes metes and bounds descriptions of all tree conservation areas and tree protection fencing as required (UDO 9.1.5).

☑ **LEGAL DOCUMENTS** - Email to legaldocumentreview@raleighnc.gov. Legal documents must be approved, executed, and recorded prior to or in conjunction with the recorded plat on which the associated easements are shown. Copies of recorded documents must be returned to the City within one business day of recording to avoid withholding of further permit issuance.

☑	Stormwater Maintenance Covenant Required
☑	Slope Easement Deed of Easement Required
☑	Utility Placement Deed of Easement Required

☑	Right of Way Deed of Easement Required
☑	Public Access Deed of Easement Required

☑ **RECORDED MAP(S)** - Submit plat to record new property lines, easements, tree conservation areas, etc.). Plats may be submitted for review when the Site Permitting Review plans, if required, have been deemed ready for mylar signature.

The following items must be approved prior to recording the plat:

General

1. Demonstrate compliance with UDO Section 2.5.7 regarding required open space.

2. Street names for this development shall be approved by the Raleigh GIS Division and by Wake County.

3. Prior to Site Permit (SPR) Approval, SUB-0080-2022 shall be recorded with Wake County Register of Deeds, showing access for this subdivision via Street N.

4. Provide documentation indicating a Property Owner's Association has been established for the subject development.

City of Raleigh
Development Services Department
One Exchange Plaza
Raleigh, NC 27602
(919) 996-2492
currentplanning@raleighnc.gov
www.raleighnc.gov

Engineering

5. A pedestrian and bicycle deed of easement, in addition to a plat showing the location of the easement, shall be submitted to the Planning and Development Services Department for review, and if acceptable, approved for recordation. Approved plats must be recorded at the Wake County Register of Deeds Office on or before the 14th day following approval by the City. The 14-day expiration date shall be clearly indicated on the plat. By the end of the next business day following recordation of the plat, all required legal instruments (including deeds of easement) shall be recorded, and recorded copies of the plat and all legal instruments required by the City in association with development approval shall be provided to the City. (Reference: UDO 8.1.7.A; 10.2.5.F.4.d)

6. A fee-in-lieu for public improvements stopping short of property lines is paid to the City of Raleigh (UDO 8.1.10).

7. A public street right-of-way deed of easement, in addition to a plat showing the location of the easement, shall be submitted to the Planning and Development Services Department for review, and if acceptable, approved for recordation. Approved plats must be recorded at the Wake County Register of Deeds Office on or before the 14th day following approval by the City. The 14-day expiration date shall be clearly indicated on the plat. By the end of the next business day following recordation of the plat, all required legal instruments (including deeds of easement) shall be recorded, and recorded copies of the plat and all legal instruments required by the City in association with development approval shall be provided to the City. (Reference: UDO 8.1.7.A; 10.2.5.F.4.d)

8. A public access deed of easement, in addition to a plat showing the location of the easement, shall be submitted to the Planning and Development Services Department for review, and if acceptable, approved for recordation. Approved plats must be recorded at the Wake County Register of Deeds Office on or before the 14th day following approval by the City. The 14-day expiration date shall be clearly indicated on the plat. By the end of the next business day following recordation of the plat, all required legal instruments (including deeds of easement) shall be recorded, and recorded copies of the plat and all legal instruments required by the City in association with development approval shall be provided to the City. (Reference: UDO 8.1.7.A; 10.2.5.F.4.d)

9. A 5' utility placement easement deed of easement, in addition to a plat showing the location of the easement, shall be submitted to the Planning and Development Services Department for review, and if acceptable, approved for recordation. Approved plats must be recorded at the Wake County Register of Deeds Office on or before the 14th day following approval by the City. The 14-day expiration date shall be clearly indicated on the plat. By the end of the next business day following recordation of the plat, all required legal instruments (including deeds of easement) shall be recorded, and recorded copies of the plat and all legal instruments required by the City in association with development approval shall be provided to the City. (Reference: UDO 8.1.7.A; 10.2.5.F.4.d)

City of Raleigh
Development Services Department
One Exchange Plaza
Raleigh, NC 27602
(919) 996-2492
currentplanning@raleighnc.gov
www.raleighnc.gov

10. A slope easement deed of easement, in addition to a plat showing the location of the easement, shall be submitted to the Planning and Development Services Department for review, and if acceptable, approved for recordation. Approved plats must be recorded at the Wake County Register of Deeds Office on or before the 14th day following approval by the City. The 14-day expiration date shall be clearly indicated on the plat. By the end of the next business day following recordation of the plat, all required legal instruments (including deeds of easement) shall be recorded, and recorded copies of the plat and all legal instruments required by the City in association with development approval shall be provided to the City. (Reference: UDO 8.1.7.A; 10.2.5.F.4.d)

11. A public infrastructure surety shall be provided to City of Raleigh Transportation – Development Engineering Division (UDO 8.1.3) in the amount of 100% of the improvement cost for the NCDOT portion and 125% of the improvement cost for the City of Raleigh infrastructure.

Public Utilities

12. Site Permit Review plans (SPR) must be approved by the City of Raleigh Public Utilities Department for all public water, public sewer and/or private sewer extensions.

13. A Petition for Annexation into the City limits for the 0.30 acre portion of the property recombined into the larger tract (BM2025 page 01498) shall be submitted in accordance with City Council policy for extension of utility service to properties currently outside of the City limits. This voluntary annexation in no way obligates the City to extend utility services to the property.

Stormwater

14. The riparian buffers, in accordance with the preliminary plan and the State of North Carolina regulations, shall be shown on plats for recording along with required buffer statement (Recorded Map Checklist).

15. A surety equal to 125% of the cost of the construction of a stormwater device shall be paid to the Engineering Services Department (UDO 9.2.2.D.1.d).

16. The City form document entitled Declaration of Maintenance Covenant and Grant of Protection Easement for Stormwater Control Facilities shall be approved by the City and recorded with the county register of deeds office (UDO 9.2.2.G). Maintenance Covenant for the adjacent SUB-0080-2022 will need to reflect that “SCM G” in that subdivision will serve this development.

17. All stormwater control measures and means of transporting stormwater runoff to and from any nitrogen and stormwater runoff control measures shall be shown on all plats for recording as private drainage easements (UDO 9.2).

18. The maximum allocated impervious area for all applicable lots in the subdivision should be identified on all maps for recording.

Urban Forestry

City of Raleigh
Development Services Department
One Exchange Plaza
Raleigh, NC 27602
(919) 996-2492
currentplanning@raleighnc.gov
www.raleighnc.gov

19. A public infrastructure surety for 28 street trees shall be provided to City of Raleigh Transportation – Development Engineering Division (UDO 8.1.3) in the amount of 125% of the improvement cost for the City of Raleigh infrastructure.

20. A tree conservation plat shall be recorded with metes and bounds showing the designated tree conservation areas (UDO 9.1). This development proposes 0.75 acres of tree conservation area.

☑ **BUILDING PERMITS** - For buildings and structures shown on the approved plans. Commercial building permit plans must include the signed, approved Site Permitting Review plans attached, if applicable. Permit sets may be reviewed prior to the recordation of required plats, but cannot be approved.

The following items must be approved prior to the issuance of building permits:

Public Utilities

1. A plat must be recorded at the Wake County Register of Deeds office for all utility easement dedications.

2. A water and/or sanitary sewer deed of easement, in addition to a plat must be recorded at the Wake County Register of Deeds office for all water and sanitary sewer easement dedications.

Stormwater

3. All stormwater control measures and means of transporting stormwater runoff to and from any nitrogen and stormwater runoff control measures shall be shown on all plats for recording as private drainage easements (UDO 9.2).

4. If total land disturbance will be over 12,000 sq. ft. for multiple houses, a separate site plan submittal & approval will be required. Site plans require an erosion control plan. (UDO 9.4.6.)

5. Impervious restrictions for each lot must be recorded on a plat prior to building permit issuance.

Urban Forestry

6. Tree impact permits must be obtained for the approved streetscape tree installations in the right-of-way. This development proposes 28 street trees along Walnut Edge Lane.

The following are required prior to issuance of building occupancy permit:

General

1. All Water, Sanitary Sewer and Reuse facilities shall be installed, inspected, tested and accepted by the City of Raleigh Public Utilities Department for operations and maintenance.

2. Final inspection of tree conservation areas and right-of-way street trees by Urban Forestry Staff.

City of Raleigh
Development Services Department
One Exchange Plaza
Raleigh, NC 27602
(919) 996-2492
currentplanning@raleighnc.gov
www.raleighnc.gov

3. All street lights and street signs required as part of the development approval are installed.

4. Required public right-of-way infrastructure improvements shall be, at a minimum, sufficiently completed to provide the necessary, safe emergency and vehicular access.

Stormwater

5. As-built impervious survey is accepted by the Engineering Services Department (UDO 9.2).

6. As-built drawings and associated forms for all Stormwater devices are accepted by the Engineering Services Department (UDO 9.2.2.D.3).

EXPIRATION DATES: If significant construction has not taken place on a project after preliminary subdivision approval, that approval may "sunset" and be declared void, requiring re-approval before permits may be issued. To avoid allowing this preliminary approval to "sunset", the following must take place by the following dates:

3-Year Sunset Date: October 14, 2028
Record at least ½ of the land area approved.

5-Year Sunset Date: October 14, 2030
Record entire subdivision.

I hereby certify this administrative decision.

Signed: Keegan.McDonald@raleighnc.gov Digitally signed by Keegan.McDonald@raleighnc.gov DN: E=Keegan.McDonald@raleighnc.gov, CN=Keegan.McDonald@raleighnc.gov Reason: I am approving this document Date: 2025.10.14 13:19:11-04'00' Date: 10/14/2025

Development Services Dir/Designee

Staff Coordinator: Jessica Gladwin

DocuSign Envelope ID: FBA7ECB7-F670-4F94-9337-6FA882B531E5

Preliminary Subdivision Application

Site Review

Planning and Development Customer Service Center • One Exchange Plaza, Suite 400 | Raleigh, NC 27601 | 919-996-2500

Raleigh

INSTRUCTIONS: This form is used when submitting a Preliminary Subdivision (UDO Section 10.2.5). Please check the appropriate review type and include the plan checklist document. Please email all documents and your preliminary subdivision plans to SiteReview@raleighnc.gov.

DEVELOPMENT OPTIONS (UDO Chapter 2)		
☐ Conventional Subdivision	☑ Compact Development	☐ Conservation Development
☐ Cottage Court	☐ Flag lot	☐ Frequent Transit Development Option
NOTE: Subdivisions may require City Council approval if located in a Historic Overlay District.		

GENERAL INFORMATION
Scoping/sketch plan case number(s):
Development name (subject to approval): Bluejack Falls - 9-Acre Tract
Property Address(es): 2537 Wall Store Road
Recorded Deed PIN(s): 1731225878

Building type(s):	☐ Detached House	☐ Attached House	☑ Townhouse	☐ Apartment
☐ General Building	☐ Mixed Use Building	☐ Civic Building	☐ Open Lot	☐ Tiny House

CURRENT PROPERTY OWNER/APPLICANT/DEVELOPER INFORMATION	
Current Property Owner(s) Names:	
Company: RQ Land LLC	Title:
Address: 7803 Glenroy Road, Suite 200, Minneapolis, Minnesota, 55439-3126	
Phone #:	Email:
Applicant Name (If different from owner. See "who can apply" in instructions): Nick Williamson, Proj. Mngr.	
Relationship to owner: ☐ Lessee or contract purchaser ☑ Owner's authorized agent ☐ Easement holder	
Company: McAdams	Address: 2905 Meridian Parkway, Durham, NC, 27713
Phone #: (919) 361-5000	Email: williamson@mcadamsco.com
NOTE: please attach purchase agreement or contract, lease or easement when submitting this form.	
Developer Contact Names: Jacquel Hajder	
Company: Doran Companies	Title: Director of Development
Address: 7803 Glenroy Road, Suite 200, Minneapolis, Minnesota, 55439-3126	
Phone #: (952) 641-9423	Email: jacquel.hajder@dorancompanies.com

Page 1 of 2

REVISION 04.17.23

raleighnc.gov

DocuSign Envelope ID: FBA7ECB7-F670-4F94-9337-6FA882B531E5

DEVELOPMENT TYPE + SITE DATE TABLE – ZONING INFORMATION		
Gross site acreage:		
Zoning districts (if more than one, provide acreage of each): R-4		
Overlay district(s):	Inside City Limits? ☑ Yes ☐ No	Historic District/Landmark: N/A ☐
Conditional Use District (CUD) Case # Z-	Board of Adjustment Case # BOA-	Design Alternate Case # DA-

STORMWATER INFORMATION	
Imperious Area on Parcel(s): Existing (sf) 0 Proposed total (sf) 99,272	Impervious Area for Compliance (includes right-of-way): Existing (sf) 0 Proposed total (sf) 126,348

NUMBER OF LOTS AND DENSITY		
# of Detached House Lots:	# of Attached House Lots:	# of Townhouse Lots: 47
# of Tiny House Lots:	# of Open Lots: 2	# of Other Lots (Apartment, General, Mixed Use, Civic):
Total # of Lots: 49	Total # Dwelling Units: 47	
Proposed density for each zoning district (UDO 1.5.2.F):		

SIGNATURE BLOCK

Pursuant to state law (N.C. Gen. Stat. § 160D-403(a)), applications for development approvals may be made by the landowner, a lessee or person holding an option or contract to purchase or lease land, or an authorized agent of the landowner. An easement holder may also apply for development approval for such development as is authorized by the easement.

By submitting this application, the undersigned applicant acknowledges that they are either the property owner or one of the persons authorized by state law (N.C.G.S. 160D-403(a)) to make this application, as specified in the application. The undersigned also acknowledges that the information and statements made in the application are correct and the undersigned understands that development approvals are subject to revocation for false statements or misrepresentations made in securing the development approval, pursuant to N.C. Gen. Stat. § 160D-403(f).

The undersigned indicates that the property owner(s) is aware of this application and that the proposed project described in this application will be maintained in all respects in accordance with the plans and specifications submitted herewith, and in accordance with the provisions and regulations of the City of Raleigh Unified Development Ordinance.

The undersigned hereby acknowledges that, pursuant to state law (N.C.G.S. 143-755(b1), if this permit application is placed on hold at the request of the applicant for a period of six consecutive months or more, or if the applicant fails to respond to comments or provide additional information requested by the City for a period of six consecutive months or more, then the application review is discontinued and a new application is required to proceed and the development regulations in effect at the time permit processing is resumed shall apply to the new application.

Signature:	Date: 10/24/2023
Printed Name: Anne Behrendt	
Signature:	Date:
Printed Name:	

Page 2 of 2

REVISION 04.17.23

raleighnc.gov

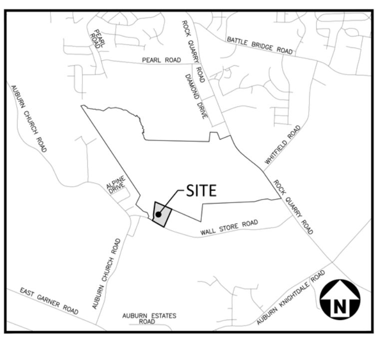

VICINITY MAP

1" = 2000'

X:\Projects\DRN\2021110767\04-Production\Engineering\Site Plan - Construction Drawings\Current Drawings\9-Acre Tract\2021110767-PSP-CS1.dwg, 8/12/2025 10:06:06 AM, Kevin Hughes

BLUEJACK RALEIGH 9-ACRE TRACT

2537 WALL STORE ROAD
RALEIGH, NORTH CAROLINA, 27610

PRELIMINARY SUBDIVISION PLAN

CITY OF RALEIGH CASE NUMBER: SUB-0045-2023

PROJECT NUMBER: 2021110767

DATE: AUGUST 4, 2023

REVISED: AUGUST 8, 2025

PROPERTY OWNER

NAME	PIN	ADDRESS
RQ LAND, LLC	1731225878	7803 GLENROY ROAD, SUITE 200, MINNEAPOLIS, MINNESOTA, 55439-3126

SITE DATA

SITE ADDRESS:	2537 WALL STORE ROAD, RALEIGH, NORTH CAROLINA, 27610
PARCEL PIN NUMBER:	1731225878
EXISTING ZONING:	R-4
OVERLAY DISTRICT:	NONE APPLICABLE
BLOCK PERIMETER:	MAX ALLOWABLE: 3,000 LF PROPOSED: VARIES (SEE BLOCK PERIMETER SHEET FOR EXCLUSIONS)
WATERSHED:	BIG BRANCH SOUTH
FLOODPLAIN/FIRM PANEL:	NONE APPLICABLE
SITE AREA:	GROSS SITE AREA: 8.09 ACRES (352,400 SF) ; RIGHT OF WAY DEDICATION: 1.26 ACRES (54,993 SF); NET SITE AREA: 6.83 ACRES (297,407 SF)
EXISTING USE:	VACANT
PROPOSED USE:	TOWNHOUSE
PROPOSED DWELLING UNITS:	45 UNITS (3 BEDROOMS PER UNIT)
REQUIRED VEHICULAR PARKING	NO VEHICULAR PARKING MAXIMUM PER SECTION 7.1.2.C
REQUIRED BICYCLE PARKING	SHORT-TERM BICYCLE PARKING: NONE REQUIRED; LONG-TERM BICYCLE PARKING: NONE REQUIRED
R-4 DENSITY:	MINIMUM SF/UNIT: 6,000 SF/UNIT PROPOSED: 6,609 SF/UNIT (45 DWELLING UNITS)
IMPERVIOUS AREA:	EXISTING IMPERVIOUS: 0.00 AC PROPOSED IMPERVIOUS: 2.90 AC (126,348 SF) FUTURE IMPERVIOUS: 0.00 (0 SF) TOTAL PROPOSED IMPERVIOUS: 2.90 AC (126,348 SF)

OPEN SPACE CALCULATIONS

NET SITE AREA:	6.83 ACRES (297,407 SF)
OPEN SPACE: REQUIRED: PROVIDED:	 1.37 ACRES (59,481 SF) (20%) 2.71 ACRES (118,220) (40%)
CONTIGUOUS OPEN SPACE: REQUIRED: PROVIDED:	 0.82 ACRES (60% OF REQUIRED OPEN SPACE) 1.47 ACRES (64,184 SF)
STORMWATER CONTROL MEASURES: ALLOWABLE: PROVIDED:	 0.34 ACRES (25% OF REQUIRED OPEN SPACE) 0.00 ACRES (0 SF) - SEE SUB-0080-2022

OUTDOOR AMENITY AREA CALCULATIONS

NET SITE AREA:	6.83 ACRES (297,407 SF)
OUTDOOR AMENITY AREA 5% REQUIRED: PROVIDED:	 0.34 ACRES (14,870 SF) 0.39 ACRES (17,028 SF)

LOT DATA TABLE

RESIDENTIAL LOTS	LOTS 1-45	45 LOTS
HOA/COMMUNITY LOTS	LOTS 46-47	2 LOTS
TOTAL LOTS:		47 LOTS
SEE SHEET C2.00 FOR LOT AREAS		

TOWNHOUSE COMPACT DEVELOPMENT STANDARD OF UDO SECTION 2.3.4

SITE DIMENSIONS	
NET SITE AREA (MIN):	6,000 SF
WIDTH (MIN):	65'
OUTDOOR AMENITY AREA (MIN):	5%
LOT DIMENSIONS	
AREA (MIN):	n/a
WIDTH (MIN):	16'
BUILDING/STRUCTURE SETBACKS	
FROM PRIMARY STREET (MIN):	20'
FROM SIDE STREET (MIN):	20'
FROM SIDE SITE BOUNDARY LINE:	10'
FROM ALLEY:	4' or 20' MIN
INTERNAL BUILDING SEPARATION (MIN):	10'
RESIDENTIAL INFILL RULES APPLY:	YES
PARKING SETBACKS	
FROM PRIMARY STREET (MIN):	20'
FROM SIDE STREET (MIN):	10'
FROM SIDE LOT LINE:	0'
FROM REAR LOT LINE:	3'

SOLID WASTE COMPLIANCE STATEMENT:

1. THE DEVELOPER ACKNOWLEDGES THAT THEY HAVE REVIEWED AND ARE IN COMPLIANCE WITH THE REQUIREMENTS SET FORTH IN THE SOLID WASTE DESIGN MANUAL.
2. THE SOLID WASTE REMOVAL FOR THIS PROJECT WILL BE HANDLED BY THE CITY OF RALEIGH.
3. INDIVIDUAL ROLLOUT CARTS WILL BE PROVIDED.

811 Know what's below. Call before you dig.

CONTRACTOR SHALL NOTIFY "NC811" (811) OR (1-800-632-4949) AT LEAST 3 FULL BUSINESS DAYS PRIOR TO BEGINNING CONSTRUCTION OR EXCAVATION TO HAVE EXISTING UTILITIES LOCATED. CONTRACTOR SHALL CONTACT ANY LOCAL UTILITIES THAT PROVIDE THEIR OWN LOCATOR SERVICES INDEPENDENT OF "NC811". REPORT ANY DISCREPANCIES TO THE ENGINEER IMMEDIATELY.

SHEET INDEX

C0.00	PROJECT NOTES
C1.00	OVERALL EXISTING CONDITIONS
C2.00	SITE PLAN
C2.01	LOT DIMENSION PLAN
C2.02	BLOCK PERIMETER PLAN
C2.03	TRANSPORATION PLAN
C2.04	OPEN AREA PLAN
C3.00	GRADING AND STORM DRAINAGE PLAN
C4.00	OVERALL UTILITY PLAN
C8.00	SITE DETAILS
C8.01	SITE DETAILS
C8.02	STORM DRAINAGE DETAILS
C8.03	WATER DETAILS
C8.04	SANITARY SEWER DETAILS
L5.00	TREE CONSERVATION PLAN
L5.01	LANDSCAPE PLAN
L5.02	LANDSCAPE NOTES AND DETAILS

ATTENTION CONTRACTORS

The **Construction Contractor** responsible for the extension of water, sewer, and/or reuse, as approved in these plans, is responsible for contacting the **Public Works Department** at **(919) 996-2409**, and the **Public Utilities Department** at **(919) 996-4540** at least **twenty four hours** prior to beginning any of their construction.

Failure to notify both **City Departments** in advance of beginning construction, will result in the issuance of **monetary fines**, and require reinstallation of any water or sewer facilities not inspected as a result of this notification failure.

Failure to call for **Inspection, Install a Downstream Plug,** have **Permitted Plans** on the **Jobsite**, or any other **Violation** of **City of Raleigh Standards** will result in a **Fine and Possible Exclusion** from future work in the **City of Raleigh.**

SEE SHEET C0.00 FOR ALL PROJECT, SITE, GRADING, STORM DRAINAGE AND UTILITY NOTES

ALL CONSTRUCTION SHALL BE IN ACCORDANCE WITH THE CURRENT CITY OF RALEIGH AND NCDOT (WHERE APPLICABLE) ENGINEERING DESIGN AND CONSTRUCTION STANDARDS

SPECIAL CONDITIONS OF SUBDIVISION APPROVAL

PRELIMINARY DRAWING - NOT RELEASED FOR CONSTRUCTION

MCADAMS

The John R. McAdams Company, Inc.
2905 Meridian Parkway
Durham, NC 27713

phone 919. 361. 5000
fax 919. 361. 2269
license number: C-0293, C-187

www.mcadamsco.com

CONTACT

NICK WILLIAMSON
williamson@mcadamsco.com
PHONE: 919. 361. 5000

CLIENT

DORAN COMPANIES
7803 GLENROY ROAD, SUITE 200
BLOOMINGTON, MINNESOTA, 55439-3126
PHONE: 952. 288. 2051

DORAN

PROJECT DIRECTORY

DEVELOPER
DORAN COMPANIES
7803 GLENROY ROAD, SUITE 200
BLOOMINGTON, MINNESOTA, 55439-3126
PHONE: 952. 288. 2051

[redacted]

REVISIONS

NO.	DATE	
1	10. 27. 2023	PER COR COMMENTS
2	01. 05. 2024	PER COR COMMENTS
3	03. 15. 2024	PER COR COMMENTS
4	05. 07. 2024	PER COR COMMENTS
5	06. 27. 2024	PER COR COMMENTS
6	02. 14. 2025	REV. P/L FOR 35' B2 PROTECTIVE YARD
7	05. 20. 2025	PER COR COMMENTS
8	08. 08. 2025	PER COR COMMENTS

PRELIMINARY SUBDIVISION PLAN FOR:

BLUEJACK FALLS - 9-ACRE TRACT
RALEIGH, NORTH CAROLINA, 27610
PROJECT NUMBER: 2021110767

SITE PLAN NOTES

1. NON-ALLEY LOADED DRIVEWAYS MAY INTERSECT A STREET NO CLOSER THAN 20 FEET FROM THE INTERSECTION OF TWO STREET RIGHT-OF-WAYS. THE MINIMUM CORNER CLEARANCE FROM CURB LINE OR EDGE OF PAVEMENT OF INTERSECTING STREETS SHALL BE AT LEAST 20 FEET FROM THE POINT OF TANGENCY OF THE RADIUS OF CURVATURE, OR 20 FEET FROM THE INTERSECTION OF RIGHT-OF-WAY LINES, WHICH EVER IS GREATER. THE RADIUS OF THE DRIVEWAY SHALL NOT ENCROACH ON THE MINIMUM CORNER CLEARANCE. REFER TO SECTION 6.5 OF THE LATEST VERSION OF THE RALEIGH STREET DESIGN MANUAL FOR ADDITIONAL DETAILS.
2. RIGHT-OF-WAY SHALL BE CLEARED AND GRUBBED WITHIN 50' OF ALL MINOR RESIDENTIAL, RESIDENTIAL, AND RESIDENTIAL COLLECTOR INTERSECTIONS. THE FULL LENGTH OF THE RIGHT-OF-WAY SHALL BE CLEARED AND GRADED ALONG ALL MAJOR, MINOR, & SENSITIVE AREA THOROUGHFARES.
3. WITHIN THE AREA DEFINED SIGHT TRIANGLES SHOWN ON THESE PLANS, THERE SHALL BE NO SIGHT OBSTRUCTING OR PARTLY OBSTRUCTING WALL, FENCE, SIGN, FOLIAGE BERMS, OR PARKED VEHICLES BETWEEN THE HEIGHTS OF 24 INCHES AND 8 FEET ABOVE THE CURB LINE ELEVATION OR THE NEAREST TRAVEL WAY IF NO CURB LINE EXISTS. REFER TO SECTION 6.12 OF THE LATEST VERSION OF THE RALEIGH STREET DESIGN MANUAL FOR ADDITIONAL DETAILS.
4. MULTIWAY STOP CONTROL WILL NOT BE USED AT ANY PUBLIC STREET INTERSECTION WITHOUT AN ENGINEERING STUDY TO PROVIDE DATA TO CITY OF RALEIGH TRANSPORTATION DIVISION THAT THE MULTIWAY STOP INSTALLATION WARRANTS CAN BE MET AND ORDINANCED BY CITY COUNCIL APPROVAL.
5. ALL CONSTRUCTION SHALL CONFORM TO THE LATEST CITY OF RALEIGH AND/OR NCDOT STANDARDS AND SPECIFICATIONS AS APPLICABLE.
6. ALL DIMENSIONS SHOWN ON SITE PLAN ARE MEASURED TO FACE OF CURB UNLESS OTHERWISE NOTED.
7. CONTRACTOR SHALL MAINTAIN AN "AS-BUILT" SET OF DRAWINGS TO RECORD THE EXACT LOCATION OF ALL PIPING PRIOR TO CONCEALMENT. DRAWINGS SHALL BE GIVEN TO THE ENGINEER UPON COMPLETION OF THE PROJECT WITH A COPY OF THE TRANSMITTAL LETTER TO THE OWNER.
8. EXISTING IMPROVEMENTS DAMAGED DURING CONSTRUCTION SHALL BE REPLACED/RESTORED TO THEIR ORIGINAL CONDITION AND TO THE SATISFACTION OF THE OWNER, BY THE CONTRACTOR RESPONSIBLE FOR THE DAMAGE.
9. THE CONTRACTOR SHALL NOTE THAT THE DRAWINGS MAY NOT SHOW EVERY OFFSET, TRANSITION, FITTING, ETC. THAT MAY BE REQUIRED. THE CONTRACTOR SHALL INSTALL SUCH STANDARD APPURTENANCES AS REQUIRED TO CLOSELY FOLLOW THE GRADES AND ALIGNMENTS DEPICTED ON THE PLANS.
10. CONTRACTOR SHALL NOTIFY "NC811" (811) OR (1-800-632-4949) AT LEAST 3 FULL BUSINESS DAYS PRIOR TO BEGINNING CONSTRUCTION OR EXCAVATION TO HAVE EXISTING UTILITIES LOCATED. CONTRACTOR SHALL CONTACT ANY LOCAL UTILITIES THAT PROVIDE THEIR OWN LOCATOR SERVICES INDEPENDENT OF "NC811". REPORT ANY DISCREPANCIES TO THE ENGINEER IMMEDIATELY.
11. CONTRACTOR IS RESPONSIBLE FOR COORDINATING CONSTRUCTION ACTIVITIES WITH THE APPROPRIATE UTILITY COMPANIES FOR ANY REQUIRED RELOCATIONS (I.E. POWER POLES, TELEPHONE PEDESTALS, WATER METERS, ETC.).
12. PRIOR TO BEGINNING CONSTRUCTION BEYOND EROSION CONTROL MEASURES, THE GENERAL CONTRACTOR SHALL SCHEDULE AND ATTEND A PRE-CONSTRUCTION CONFERENCE WITH THE CITY OF RALEIGH PUBLIC WORKS DEPARTMENT (919) 996-2409, AND A REPRESENTATIVE OF THE ENGINEER AND OWNER. THE PURPOSE OF THIS MEETING IS TO REVIEW THE SPECIFIC COMPONENTS OF THE PLAN AND OPERATION OF THE FACILITIES DURING CONSTRUCTION.
13. ALL DIMENSIONS AND GRADES SHOWN ON THE PLANS SHALL BE FIELD VERIFIED BY THE CONTRACTOR PRIOR TO CONSTRUCTION. CONTRACTOR SHALL NOTIFY THE ENGINEER IF ANY DISCREPANCIES EXIST PRIOR TO PROCEEDING WITH CONSTRUCTION, FOR NECESSARY PLAN OR GRADE CHANGES. NO EXTRA COMPENSATION SHALL BE PAID TO CONTRACTOR FOR ANY WORK DONE DUE TO DIMENSIONS OR GRADES SHOWN INCORRECTLY ON THESE PLANS IF SUCH NOTIFICATION HAS NOT BEEN GIVEN.
14. ACCESSIBLE RAMPS SHALL BE CONSTRUCTED IN ACCORDANCE WITH THE CITY OF RALEIGH UNIFIED DEVELOPMENT ORDINANCE (UDO) DETAILS.
15. ALL SIDEWALKS THAT CONNECT TO THE PUBLIC RIGHT-OF-WAY MUST BE ACCESSIBLE TO PERSONS WHO ARE BLIND, HAVE LOW VISION AND PEOPLE WITH MOBILITY DISABILITIES. PEDESTRIAN EXISTING ROUTES AND ALTERNATE PEDESTRIAN ROUTES DURING CONSTRUCTION WILL BE REQUIRED TO BE COMPLIANT WITH THE PUBLIC RIGHTS OF WAY ACCESSIBILITY GUIDELINES (PROWAG), 2010 ADA STANDARDS FOR ACCESSIBLE DESIGN AND THE MANUAL ON UNIFORM TRAFFIC CONTROL DEVICES (MUTCD).
16. TYPICAL PAVEMENT SECTION DETAILS ARE SHOWN WITHIN THIS SET AND INTENDED TO BE A MINIMUM PAVEMENT SECTION REQUIREMENT. THE CURRENT GEOTECHNICAL REPORT SHALL OVER-RIDE ALL TYPICAL PAVEMENT SECTIONS SHOWN, IF THE GEOTECHNICAL ENGINEER DEEMS A HEAVIER SECTION IS REQUIRED.
17. EQUIPMENT AND PRODUCTS OTHER THAN THOSE SPECIFIED MAY BE USED PROVIDED APPROVAL HAS BEEN OBTAINED FROM THE OWNER IN WRITING PRIOR TO ORDERING OR INSTALLATION. THE CONTRACTOR SHALL WAIVE ANY CLAIM FOR ADDITIONAL COST RELATED TO SUBSTITUTION OF ALTERNATE EQUIPMENT.
18. IF UNFORESEEN CONDITIONS DEVELOP DURING CONSTRUCTION, REFER TO THE LATEST VERSION OF THE RALEIGH STREET DESIGN MANUAL AND CONTACT PUBLIC WORKS STAFF FOR FURTHER GUIDANCE.
19. ALL SIGNAGE ASSOCIATED WITH THE PUBLIC STREET SYSTEM SHALL ADHERE TO MUTCD STANDARDS AND SPECIFICATIONS.
20. ANY TRANSIT STOP LOCATIONS SHOWN ARE PRELIMINARY ONLY. FINAL LOCATION SHALL BE DETERMINED ONCE THE CITY OF RALEIGH TRANSIT ROUTE HAS BEEN FINALIZED. ALL TRANSIT STOPS SHALL HAVE A 10'x20'x6" (3000 PSI) CONCRETE PAD.

STORM DRAINAGE NOTES

1. ALL STORM DRAINAGE PIPES SHOWN SHALL BE REINFORCED CONCRETE (RCP) (MINIMUM CLASS III) UNLESS NOTED OTHERWISE. CONTRACTOR TO COORDINATE WITH THE GEOTECH TO VERIFY TYPE OF BEDDING REQUIRED BASED ON SOIL CONDITIONS. CONTRACTOR TO SELECT REQUIRED CLASS OF PIPE BASED ON DEPTH OF PIPE AND BEDDING PROVIDED PER THE AMERICAN CONCRETE PIPE ASSOCIATION GUIDELINES.
2. ALL STORM DRAINAGE CONSTRUCTION SHALL BE IN ACCORDANCE WITH THE CITY OF RALEIGH STANDARDS.
3. ALL CONCRETE SHALL MEET A MINIMUM 3000 PSI COMPRESSIVE STRENGTH.
4 ALL PIPE IN STORM DRAIN STRUCTURES SHALL BE STRUCK EVEN WITH INSIDE WALL.
5. ALL PIPE JOINTS SHALL BE MADE WITH PREFORMED JOINT SEALER, WHICH CONFORMS TO AASHTO SPECIFICATION M-198 FOR TYPE B FLEXIBLE PLASTIC GASKETS UNLESS OTHERWISE NOTED.
6. THE INTERIOR SURFACES OF ALL STORM DRAINAGE STRUCTURES SHALL BE POINTED UP AND SMOOTHED TO AN ACCEPTABLE STANDARD, USING MORTAR MIXED TO MANUFACTURER'S SPECIFICATIONS.
7. ALL BACKFILL SHALL BE NON-PLASTIC IN NATURE, FREE FROM ROOTS, VEGETATION MATTER, WASTE CONSTRUCTION MATERIAL OR OTHER OBJECTIONABLE MATERIAL. SAID MATERIAL SHALL BE CAPABLE OF BEING COMPACTED BY MECHANICAL MEANS AND SHALL HAVE NO TENDENCY TO FLOW OR BEHAVE IN A PLASTIC MANNER UNDER THE TAMPING BLOWS OR PROOF ROLLING.
8. MATERIALS DEEMED BY THE OWNER'S REPRESENTATIVE OR GEOTECH AS UNSUITABLE FOR BACKFILL PURPOSES SHALL BE REMOVED AND REPLACED WITH SUITABLE MATERIAL.
9. BACKFILLING OF TRENCHES SHALL BE ACCOMPLISHED IMMEDIATELY AFTER PIPE IS LAID. THE FILL AROUND THE PIPE SHALL BE THOROUGHLY COMPACTED TO 95 % OF THE MAXIMUM DRY DENSITY OBTAINABLE WITH THE STANDARD PROCTOR TEST. THE TOP EIGHT (8) INCHES SHALL BE COMPACTED TO 100 PERCENT STANDARD PROCTOR.
10. UNDER NO CIRCUMSTANCES SHALL WATER BE ALLOWED TO RISE IN UNBACKFILLED TRENCHES AFTER PIPE HAS BEEN PLACED.
11. ALL CONCRETE PIPE AND PRECAST STORM STRUCTURES SHALL MEET NCDOT STANDARDS BY MANUFACTURER.
12. CONTRACTOR SHALL BE RESPONSIBLE FOR CHECKING ALL PIPE AND STRUCTURES FOR CRACKS OR BREAKS, PRIOR TO INSTALLATION. ANY DAMAGED ITEMS SHALL NOT BE INSTALLED.
13. "KNOCK-OUT" BOXES OR HDPE PIPE SHALL NOT BE ALLOWED WITHIN PUBLIC RIGHT-OF-WAYS UNLESS APPROVED IN WRITING BY CITY OF RALEIGH STORMWATER DEPARTMENT.

CITY OF RALEIGH PUBLIC UTILITIES STANDARD UTILITY NOTES (AS APPLICABLE)

1. All materials & construction methods shall be in accordance with City of Raleigh design standards, details & specifications (reference: CORPUD Handbook, current edition)
2. Utility separation requirements:
   a) A distance of 100' shall be maintained between sanitary sewer & any private or public water supply source such as an impounded reservoir used as a source of drinking water. If adequate lateral separation cannot be achieved, ferrous sanitary sewer pipe shall be specified & installed to waterline specifications. However, the minimum separation shall not be less than 25' from a private well or 50' from a public well.
   b) When installing water &/or sewer mains, the horizontal separation between utilities shall be 10'. If this separation cannot be maintained due to existing conditions, the variation allowed is the water main in a separate trench with the elevation of the water main at least 18" above the top of the sewer & must be approved by the Public Utilities Director. All distances are measured from outside diameter to outside diameter.
   c) Where it is impossible to obtain proper separation, or anytime a sanitary sewer passes over a watermain, DIP materials or steel encasement extended 10' on each side of crossing must be specified & installed to waterline specifications.
   d) 5.0' minimum horizontal separation is required between all sanitary sewer & storm sewer facilities, unless DIP material is specified for sanitary sewer
   e) Maintain 18" min. vertical separation at all watermain & RCP storm drain crossings; maintain 18" min. vertical separation at all sanitary sewer & RCP stormdrain crossings. Where adequate separations cannot be achieved, specify DIP materials & a concrete cradle having 6" min. clearance (per CORPUD details W- 41 & S-49).
   f) All other underground utilities shall cross water & sewer facilities with 18" min. vertical separation required.
3. Any necessary field revisions are subject to review & approval of an amended plan &/or profile by the City of Raleigh Public Utilities Department prior to construction.
4. Developer shall provide 30 days advance written notice to owner for any work required within an existing City of Raleigh Utility Easement traversing private property.
5. Contractor shall maintain continuous water & sewer service to existing residences & businesses throughout construction of project. Any necessary service interruptions shall be preceded by a 24-hour advance notice to the City of Raleigh Public Utilities Department.
6. SEWER BYPASS PUMPING – A bypass plan sealed by an NC Professional Engineer shall be provided to Raleigh Water prior to pumping operations for approval. The operations and equipment shall comply with the Public Utilities Handbook.
7. 3.0' minimum cover is required on all water mains & sewer force mains. 4.0' minimum cover is required on all reuse mains.
8. It is the developer's responsibility to abandon or remove existing water & sewer services not being used in redevelopment of a site unless otherwise directed by the City of Raleigh Public Utilities Department. This includes abandoning tap at main & removal of service from ROW or easement per CORPUD Handbook procedure.
9. Install water services with meters located at ROW or within a 2'x2' Waterline Easement immediately adjacent. NOTE: it is the applicant's responsibility to properly size the water service for each connection to provide adequate flow & pressure.
10. Inspections of 4" and larger water mains of the private distribution system will be inspected as part of the infrastructure permit.
11. Private sewer mains as part of a collection system are permitted and inspected under the private Infrastructure permit for sewer.
12. Any water or sewer services on private property that will be installed under Construction Drawings may require a Plumbing Utility Permit in the City of Raleigh. Consult with the Engineering Inspection Coordinator during the pre-construction meeting on the necessary permits.
13. Install sewer services with cleanouts located at ROW or easement line & spaced per the current NC Plumbing code.
14. Pressure reducing valves are required on all water services exceeding 80 psi; backwater valves are required on all sanitary sewer services having building drains lower than 1.0' above the next upstream manhole.
15. All environmental permits applicable to the project must be obtained from NCDWQ, USACE &/or FEMA for any riparian buffer, wetland &/or floodplain impacts (respectively) prior to construction.
16. NCDOT / Railroad Encroachment Agreements are required for any utility work (including main extensions & service taps) within state or railroad ROW prior to construction.
17. Grease Interceptor / Oil Water Separator sizing calculations & installation specifications shall be approved by the RW FOG Program Coordinator prior to issuance of a UC and/or Building Permit. Contact (919) 996-4516 or fog@raleighnc.gov for more information.
18. Cross-connection control protection devices are required based on the degree of health hazard involved as listed in Appendix B of the Rules Governing Public Water Systems in North Carolina.
19. The devices shall meet the American Society of Sanitary Engineering (ASSE) standards and be on the University of Southern California approval list.
20. The device and installation shall meet the guidelines of Appendix A – Guidelines and Requirements for the Cross Connection Program in Raleigh's Service Area.
21. The devices shall be installed and tested (both, initial and periodic testing thereafter) in accordance with the manufacturer's recommendations or the local cross connection control program, whichever is more stringent. Contact Cross.connection@raleighnc.gov for more information.
22. NOTICE for projects that involve an oversized main or urban main replacement. Any City reimbursement greater than $250,000.00 must undergo the public bidding process.
23. Private sub-metering - No resale of water shall occur without approval of the North Carolina Utility Commission. Sub-metering shall be in accordance with Section 1400 of the "SAFE DRINKING WATER ACT".

ADDITIONAL UTILITY NOTES

1. ALL WATER MAINS, SERVICES AND FIRE SERVICES GREATER THAN 2" DIAMETER ARE TO BE DUCTILE IRON PIPE. 2" & SMALLER DOMESTIC SERVICES MUST BE TYPE K SOFT COPPER (WITHOUT FITTINGS) TO THE WATER METER.
2. ALL SEWER MAINS SHALL BE EITHER PVC OR DUCTILE IRON PIPE AS SHOWN ON THE PLANS. ALL PIPE MATERIAL SHALL MEET CITY OF RALEIGH STANDARDS AND SPECIFICATIONS AS DEFINED IN THE LATEST ISSUE OF THE PUBLIC UTILITIES HANDBOOK AND/OR UNIFIED DEVELOPMENT ORDINANCE (UDO).
3. ALL FIRE HYDRANTS ALONG PUBLIC R/W LINES SHALL HAVE A 5'Wx5'L CITY OF RALEIGH WATERLINE EASEMENT ONTO ADJACENT PROPERTY.
4. ALL SANITARY SEWER INTERCEPTOR LINES (12" AND LARGER), AS WELL AS MANHOLES AND FITTINGS ASSOCIATED WITH THE INTERCEPTOR LINE, SHALL BE INTERNALLY LINED WITH PROTECTO 401 OR APPROVED EQUAL TO PREVENT HYDROGEN SULFIDE CORROSION. SEE THE CURRENT CITY OF RALEIGH PUBLIC UTILITIES DEPARTMENT HANDBOOK FOR APPROVED COATINGS AND APPLICATION METHODS.
5. IN ACCORDANCE WITH GENERAL STATUTE 87-121(G), ALL UNDERGROUND UTILITIES INSTALLED AFTER OCTOBER 1, 2014 SHALL BE ELECTRONICALLY LOCATABLE. CONTRACTOR SHALL COORDINATE DIRECTLY WITH THE CITY OF RALEIGH PUBLIC UTILITIES DEPARTMENT FOR DETAILS AND SPECIFICATIONS FOR MEETING THESE REQUIREMENTS.
6. EXISTING UTILITIES SHOWN ARE BASED ON FIELD SURVEYS AND THE BEST AVAILABLE RECORD DRAWINGS. THE CONTRACTOR SHALL VERIFY CONDITIONS PRIOR TO BEGINNING CONSTRUCTION. ANY DISCREPANCIES BETWEEN ACTUAL FIELD CONDITIONS AND THE PLANS SHALL BE REPORTED TO THE ENGINEER IMMEDIATELY.
7. ALL WATER AND SEWER MAINS WITHIN PUBLIC EASEMENTS OR RIGHTS-OF-WAY TO BE OWNED, OPERATED, AND MAINTAINED BY THE CITY OF RALEIGH.
8. ALL WATER AND SEWER MAINS NOT WITHIN PUBLIC EASEMENTS OR RIGHTS-OF-WAY TO BE PRIVATELY OWNED, OPERATED, AND MAINTAINED BY THE PROPERTY OWNER.
9. WHERE SANITARY SERVICES ARE SERVING A BUILDING INSTALLED ON A FLOOR WITH A FINISHED FLOOR ELEVATION BELOW THE ELEVATION OF THE MANHOLE COVER OF THE NEXT UPSTREAM MANHOLE IN THE PUBLIC SEWER, SUCH FIXTURES SHALL BE PROTECTED BY A BACKWATER VALVE INSTALLED IN THE SERVICE LINE. SANITARY SERVICES SERVING A BUILDING WITH A FINISHED FLOOR ELEVATION ABOVE THE ELEVATION OF THE MANHOLE COVER OF THE NEXT UPSTREAM MANHOLE IN THE PUBLIC SEWER SHALL NOT DISCHARGE THROUGH A BACKWATER VALVE.
10. CONTRACTOR SHALL NOTIFY "NC811" (811) OR (1-800-632-4949) AT LEAST 3 FULL BUSINESS DAYS PRIOR TO BEGINNING CONSTRUCTION OR EXCAVATION TO HAVE EXISTING UTILITIES LOCATED. CONTRACTOR SHALL CONTACT ANY LOCAL UTILITIES THAT PROVIDE THEIR OWN LOCATOR SERVICES INDEPENDENT OF "NC811". REPORT ANY DISCREPANCIES TO THE ENGINEER IMMEDIATELY.
11. ALL UTILITY SLEEVES SHALL BE SCHEDULE 40 PVC AND INSTALLED WITH 2' MINIMUM COVER. BOTH ENDS SHALL BE CAPPED AND MARKED.

RETAINING WALL NOTES

1. THE RETAINING WALL ALIGNMENT SHOWN ON THESE PLANS DEPICTS THE LOCATION OF THE FRONT FACE OF THE RETAINING WALL AT THE TOP OF THE WALL. THE CONTRACTOR IS RESPONSIBLE FOR ENSURING RETAINING WALLS ARE NOT LOCATED IN ANY STREAM BUFFERS, AND THEIR CONSTRUCTION DOES NOT ENCROACH INTO ANY ADJACENT PROPERTIES DUE TO ANY BATTER INCORPORATED IN THE DESIGN OF THE WALLS.
2. RETAINING WALLS ARE TO BE DESIGN-BUILD PROJECTS BY THE CONTRACTOR. IT SHALL BE THE CONTRACTOR'S RESPONSIBILITY TO OBTAIN FINAL CONSTRUCTION DRAWINGS FROM A REGISTERED ENGINEER AND GAIN ALL REQUIRED PERMITS NECESSARY FOR THE CONSTRUCTION OF THE RETAINING WALLS.
3. RETAINING WALLS SHALL BE ASSUMED TO BE BACKFILLED WITH OFF-SITE BORROW MATERIAL OR PROCESSED FILL, UNLESS THE CONTRACTOR CAN PROVIDE TO THE OWNER WITH CONFIRMATION FROM THE GEOTECHNICAL ENGINEER AND THE RETAINING WALL DESIGNER, THAT READILY AVAILABLE ON-SITE SOILS CAN BE USED.
4. THE TOP AND BOTTOM OF WALL ELEVATIONS SHOWN ON THESE PLANS IDENTIFY FINISHED GRADE ELEVATIONS ONLY. THE EXTENT THAT THE RETAINING WALL WILL BE EXTENDED BELOW GRADE TO THE FOOTING OR ABOVE GRADE TO THE TOP OF THE CAP BLOCK COURSE SHALL BE IDENTIFIED ON THE RETAINING WALL CONSTRUCTION DRAWINGS.
5. ALL RETAINING WALLS OVER 30" HIGH SHALL HAVE A SAFETY FENCE (DESIGN BY OTHERS).
6. ANY PART OF ANY RETAINING WALL THAT EXTENDS INTO THE RIGHT-OF-WAY WILL REQUIRE AN ENCROACHMENT AGREEMENT. ENCROACHMENT AGREEMENTS FOR RETAINING WALLS SHALL BE APPROVED PRIOR TO CONSTRUCTION DRAWING APPROVAL.
7. ANY TIEBACK SYSTEMS FOR THE RETAINING WALLS SHALL NOT BE ALLOWED WITHIN PUBLIC RIGHT-OF-WAY.
8. STORMWATER RUN-OFF SHALL BE DIRECTED AWAY FROM RETAINING WALLS. ANY RUN-OFF FLOWING TO AND OVER A RETAINING WALL SHALL BE KEPT TO AN ABSOLUTE MINIMUM AND BROUGHT TO THE ATTENTION OF THE WALL DESIGNER PRIOR TO THEIR DESIGN.

TRAFFIC CONTROL NOTES

1. THE CONTRACTOR SHALL CONDUCT ALL WORK IN A SAFE MANNER AND WITH A MINIMUM AMOUNT OF INCONVENIENCE TO TRAFFIC.
2. THE CONTRACTOR SHALL BE RESPONSIBLE FOR ALL TRAFFIC CONTROL AND SHALL ADHERE TO THE PROVISIONS OF THE MUTCD (MOST CURRENT EDITION).
3. NO WORK ON, OR BLOCKAGE OF, EXISTING THROUGH TRAFFIC LANES SHALL OCCUR DURING THE PEAK TRAFFIC HOURS OF 7AM-9AM AND 4PM-6PM, MONDAY THROUGH FRIDAY. THE CONTRACTOR MUST OBTAIN A LANE CLOSURE PERMIT FOR ANY WORK WHICH REQUIRES THE CLOSURE OF A TRAVEL LANE. PLEASE CONTACT THE CITY PUBLIC WORKS DEPARTMENT - TRANSPORTATION OPERATIONS DIVISION AT (919)-996-3030 FOR LANE CLOSURES AT LEAST 48 HOURS IN ADVANCE AND FOR STREET CLOSURES, AT LEAST 2 WEEKS IN ADVANCE. PROVIDE EXACT LOCATION, CROSS STREET, DATES FOR LANE CLOSURE, CONTACT PERSON AND FAX NUMBER.
4. THE CONTRACTOR SHALL BE RESPONSIBLE FOR CONTACTING THE INSPECTIONS DEPARTMENT TO OBTAIN A STREET CUT PERMIT. THE PERMIT FORM IS ON-LINE (RALEIGH.GOV) AND SHALL BE COMPLETED AND FAXED TO (919)-516-2685. THE PERMIT LASTS FOR 30 DAYS AND CAN BE EXTENDED AT NO COST IF REQUEST IS MADE PRIOR TO PERMITS EXPIRATION DATE. INQUIRIES SHALL BE MADE AT (919)-996-2430.
5. PRIOR TO CONSTRUCTION BEGINNING, ALL SIGNAGE AND TRAFFIC CONTROL SHALL BE IN PLACE.
6. THE CONTRACTOR SHALL HAVE A COMPLETE SET OF CONTRACT DOCUMENTS AS WELL AS ALL PERMITS, APPROVALS AND EASEMENTS ON THE JOB SITE AT ALL TIMES.
7. THE CONTRACTOR SHALL REPAIR ALL DAMAGED DRIVEWAYS, DRIVEWAY PIPES, CURB AND GUTTER, SIDEWALKS AND STREETS TO EXISTING CONDITION OR BETTER.
8. ALL SIDEWALKS MUST BE ACCESSIBLE TO PERSONS WHO ARE BLIND, HAVE LOW VISION AND PEOPLE WITH MOBILITY DISABILITIES. EXISTING PEDESTRIAN ROUTES AND ALTERNATE PEDESTRIAN ROUTES DURING CONSTRUCTION WILL BE REQUIRED TO BE COMPLIANT WITH THE PUBLIC RIGHTS OF WAY ACCESSIBILITY GUIDELINES (PROWAG), 2010 ADA STANDARDS FOR ACCESSIBLE DESIGN AND THE MANUAL ON UNIFORM TRAFFIC CONTROL DEVICES (MUTCD).

GRADING NOTES

1. ALL DIMENSIONS AND GRADES SHOWN ON THE PLANS SHALL BE FIELD VERIFIED BY THE CONTRACTOR PRIOR TO CONSTRUCTION. CONTRACTOR SHALL NOTIFY THE ENGINEER IF ANY DISCREPANCIES EXIST PRIOR TO PROCEEDING WITH CONSTRUCTION, FOR NECESSARY PLAN OR GRADE CHANGES. NO EXTRA COMPENSATION SHALL BE PAID TO THE CONTRACTOR FOR ANY WORK DONE DUE TO DIMENSIONS OR GRADES SHOWN INCORRECTLY ON THESE PLANS IF SUCH NOTIFICATION HAS NOT BEEN GIVEN.
2. OCCUPATIONAL SAFETY AND HEALTH ADMINISTRATION (OSHA) STANDARDS FOR EXCAVATIONS; FINAL RULE 29CFR PART 1926, SUBPART "P" APPLIES TO ALL EXCAVATIONS EXCEEDING FIVE (5) FEET IN DEPTH. EXCAVATION EXCEEDING TWENTY (20) FEET IN DEPTH REQUIRES THE DESIGN OF A TRENCH SAFETY SYSTEM BY A REGISTERED PROFESSIONAL ENGINEER, PROVIDED BY CONTRACTOR RESPONSIBLE FOR EXCAVATION.
3. ALL CONSTRUCTION SHALL BE IN ACCORDANCE WITH THE CITY OF RALEIGH AND/OR NCDOT STANDARDS AND SPECIFICATIONS AS APPLICABLE.
4. CONTRACTOR SHALL NOTIFY "NC811" (811) OR (1-800-632-4949) AT LEAST 3 FULL BUSINESS DAYS PRIOR TO BEGINNING CONSTRUCTION OR EXCAVATION TO HAVE EXISTING UTILITIES LOCATED. CONTRACTOR SHALL CONTACT ANY LOCAL UTILITIES THAT PROVIDE THEIR OWN LOCATOR SERVICES INDEPENDENT OF "NC811". REPORT ANY DISCREPANCIES TO THE ENGINEER IMMEDIATELY.
5. PRIOR TO BEGINNING CONSTRUCTION, THE GENERAL CONTRACTOR SHALL SCHEDULE AND ATTEND A PRE-CONSTRUCTION CONFERENCE WITH THE CITY OF RALEIGH STORMWATER AND EROSION CONTROL DEPARTMENT, THE ENGINEER AND A REPRESENTATIVE OF THE OWNER.
6. CONSTRUCTION, MAINTENANCE AND REMOVAL OF ALL EROSION CONTROL DEVICES ARE THE RESPONSIBILITY OF THE GENERAL CONTRACTOR. TIMING OF REMOVAL SHALL BE COORDINATED WITH THE EROSION CONTROL INSPECTOR.
7. EXISTING UTILITIES AND STRUCTURES SHOWN, BOTH UNDERGROUND AND ABOVE GROUND, ARE BASED ON A FIELD SURVEY AND THE BEST AVAILABLE RECORD DRAWINGS. THE CONTRACTOR SHALL VERIFY FIELD CONDITIONS PRIOR TO BEGINNING RELATED CONSTRUCTION. ANY DISCREPANCIES SHALL BE REPORTED TO THE ENGINEER IMMEDIATELY.
8. SOIL UNDER BUILDINGS, PAVED AREAS AND WITHIN SLOPES GREATER THAN 3:1 (H:V) SHALL BE APPROVED, PLACED AND COMPACTED AS RECOMMENDED BY THE GEOTECHNICAL ENGINEER.

811 Know what's below. Call before you dig.

CONTRACTOR SHALL NOTIFY "NC811" (811) OR (1-800-632-4949) AT LEAST 3 FULL BUSINESS DAYS PRIOR TO BEGINNING CONSTRUCTION OR EXCAVATION TO HAVE EXISTING UTILITIES LOCATED. CONTRACTOR SHALL CONTACT ANY LOCAL UTILITIES THAT PROVIDE THEIR OWN LOCATOR SERVICES INDEPENDENT OF "NC811". REPORT ANY DISCREPANCIES TO THE ENGINEER IMMEDIATELY.

PRELIMINARY DRAWING - NOT RELEASED FOR CONSTRUCTION

MCADAMS

The John R. McAdams Company, Inc.
One Glenwood Avenue
Suite 201
Raleigh, NC 27603

phone 919. 823. 4300
fax 919. 361. 2269
license number: C-0293, C-187

www.mcadamsco.com

CLIENT

DORAN COMPANIES
7803 GLENROY ROAD, SUITE 200
BLOOMINGTON, MINNESOTA, 55439-3126
PHONE: 952. 288. 2051

DORAN

BLUEJACK FALLS -9 ACRE TRACT
PRELIMINARY SUBDIVISION PLAN
2537 WALL STORE ROAD
RALEIGH, NORTH CAROLINA, 27610

[redacted]

REVISIONS

NO.	DATE	
2	01. 05. 2024	PER COR COMMENTS
3	03. 15. 2024	PER COR COMMENTS
4	05. 07. 2024	PER COR COMMENTS
5	06. 27. 2024	PER COR COMMENTS
6	02. 14. 2025	REV. P/L FOR 35' B2 PROTECTIVE YARD
7	05. 20. 2025	PER COR COMMENTS
8	08. 08. 2025	PER COR COMMENTS

PLAN INFORMATION

PROJECT NO.	2021110767
FILENAME	2021110767-PSP-N1
CHECKED BY	NDW
DRAWN BY	KWH
SCALE	N.T.S.
DATE	08. 04. 2023

SHEET

PROJECT NOTES

C0.00

X:\Projects\DRN\2021110767\04-Production\Engineering\Site Plan - Construction Drawings\Current Drawings\9-Acre Tract\2021110767-PSP-N1.dwg, 8/12/2025 10:06:11 AM, Kevin Hughes

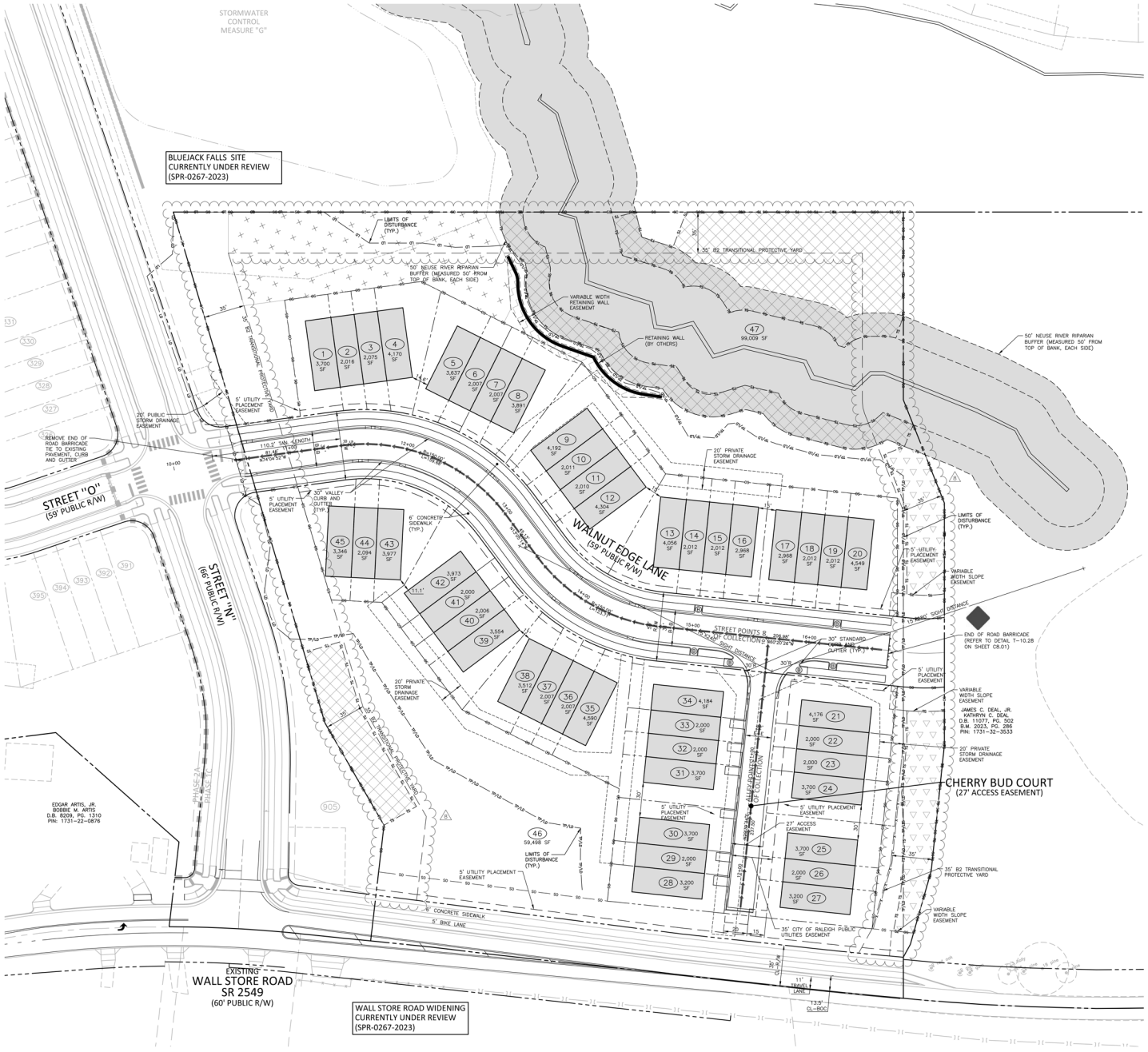

SITE LEGEND

- SIGNAGE
- YARD LIGHTS
- LIGHT POLE
- POWER POLE
- TRAFFIC DIRECTIONAL ARROW
- ACC / VAN — ACCESSIBLE PARKING STALL
- VAN ACCESSIBLE PARKING STALL
- XX — PARKING SPACE COUNT
- TYPE A, TYPE B, TYPE C — ACCESSIBLE RAMPS
- ACCESSIBLE ROUTE
- PHASE LINE
- PROPERTY LINE
- RIGHT-OF-WAY LINE
- LOT LINE
- EASEMENT LINE
- CENTERLINE
- OS — OPEN SPACE
- HEAVY DUTY ASPHALT PAVEMENT
- TS — TREE CONSERVATION AREA
- TS — TREE PROTECTION AREA
- OUTDOOR AMENITY AREA
- SOLID WASTE COLLECTION ROUTE

SEE SHEET C0.00 FOR ALL PROJECT, SITE, GRADING, STORM DRAINAGE AND UTILITY NOTES

ALL CONSTRUCTION SHALL BE IN ACCORDANCE WITH THE CURRENT CITY OF RALEIGH AND NCDOT (WHERE APPLICABLE) ENGINEERING DESIGN AND CONSTRUCTION STANDARDS

BUILDING FOOTPRINTS ARE FOR REFERENCE ONLY AND WILL BE REVIEWED AS PART OF BUILDING PERMIT APPLICATION(S).

NC GRID (NAD83)

GRAPHIC SCALE
0 20 40 80
1 INCH = 40 ft.

PRELIMINARY DRAWING - NOT RELEASED FOR CONSTRUCTION

McADAMS
The John R. McAdams Company, Inc.
One Glenwood Avenue
Suite 201
Raleigh, NC 27603
phone 919. 823. 4300
fax 919. 361. 2269
license number: C-0293, C-187
www.mcadamsco.com

CLIENT

DORAN COMPANIES
7803 GLENROY ROAD, SUITE 200
BLOOMINGTON, MINNESOTA, 55439-3126
PHONE: 952. 288. 2051

DORAN

BLUEJACK FALLS -9 ACRE TRACT
PRELIMINARY SUBDIVISION PLAN
2537 WALL STORE ROAD
RALEIGH, NORTH CAROLINA, 27610

[redacted]

REVISIONS

NO.	DATE	
2	01. 05. 2024	PER COR COMMENTS
3	03. 15. 2024	PER COR COMMENTS
4	05. 07. 2024	PER COR COMMENTS
5	06. 27. 2024	PER COR COMMENTS
6	02. 14. 2025	REV. P/L FOR 35' B2 PROTECTIVE YARD
7	05. 20. 2025	PER COR COMMENTS
8	08. 08. 2025	PER COR COMMENTS

PLAN INFORMATION

PROJECT NO.	2021110767
FILENAME	2021110767-PSP-S1
CHECKED BY	NDW
DRAWN BY	KWH
SCALE	1" = 40'
DATE	08. 04. 2023

SHEET

SITE PLAN

C2.00

U:\Projects\2021\2021110767\04-Production\Engineering\Site Plan - Construction\Drawings\Current Drawings\Site Plan 2021110767-PSP-S1.dwg, 8/12/2025 10:06:27 AM, Kevin Hughes

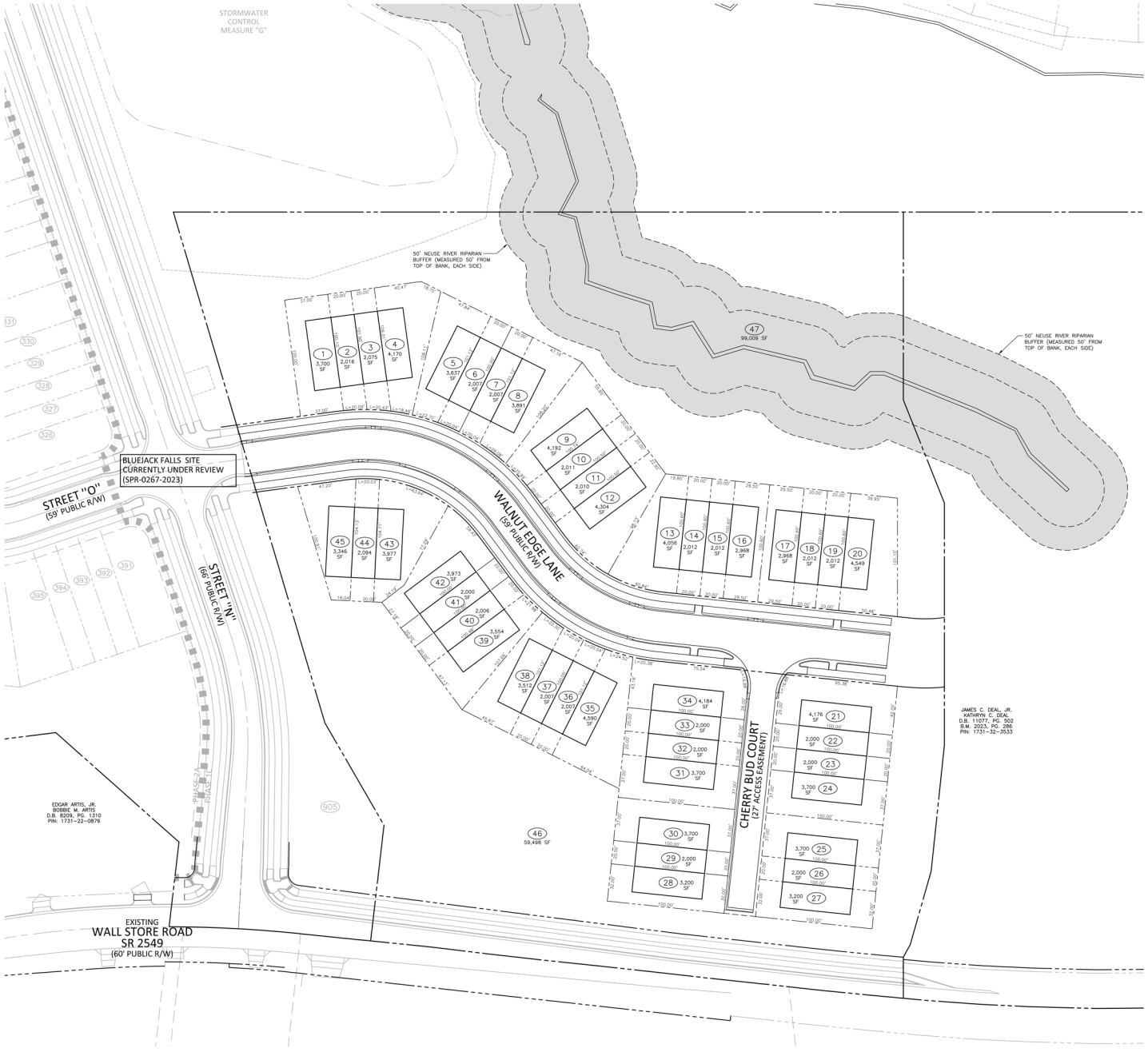

McADAMS
The John R. McAdams Company, Inc.
One Glenwood Avenue
Suite 201
Raleigh, NC 27603
phone 919. 823. 4300
fax 919. 361. 2269
license number: C-0293, C-187
www.mcadamsco.com

CLIENT

DORAN COMPANIES
7803 GLENROY ROAD, SUITE 200
BLOOMINGTON, MINNESOTA, 55439-3126
PHONE: 952. 288. 2051

DORAN

BLUEJACK FALLS -9 ACRE TRACT
PRELIMINARY SUBDIVISION PLAN
2537 WALL STORE ROAD
RALEIGH, NORTH CAROLINA, 27610

[redacted]

REVISIONS

NO.	DATE	
2	01. 05. 2024	PER COR COMMENTS
3	03. 15. 2024	PER COR COMMENTS
4	05. 07. 2024	PER COR COMMENTS
5	06. 27. 2024	PER COR COMMENTS
6	02. 14. 2025	REV. P/L FOR 35' B2 PROTECTIVE YARD
7	05. 20. 2025	PER COR COMMENTS
8	08. 08. 2025	PER COR COMMENTS

PLAN INFORMATION

PROJECT NO.	2021110767
FILENAME	2021110767-PSP-S2
CHECKED BY	NDW
DRAWN BY	KWH
SCALE	1" = 40'
DATE	08. 04. 2023

SHEET

LOT DIMESION PLAN

C2.01

N
NC GRID (NAD83)
GRAPHIC SCALE
0 20 40 80
1 INCH = 40 ft.

PRELIMINARY DRAWING - NOT RELEASED FOR CONSTRUCTION

I:\Projects\DRN\2021110767\04-Production\Engineering\Site Plan - Construction Drawings\Current Drawings\Site Plan 2021110767-PSP-S2.dwg, 8/21/2025 10:06:39 AM, Kevin Hughes

ALL BLOCKS INTERNAL TO THIS PROJECT (EXCLUDING OFF-SITE ROADS) MEET BLOCK PERIMETER STANDARDS.

BASE STANDARD LENGTH:	2500 LF
50% INCREASE WITH PEDESTRIAN ACCESS PATHWAY AND EASEMENT OR PRIVATE ALLEY (PER TEXT CHANGE TC-6-19 SECTION 2.B.3)	1250 LF
BLOCK PERIMETER (MAX.):	3750 LF

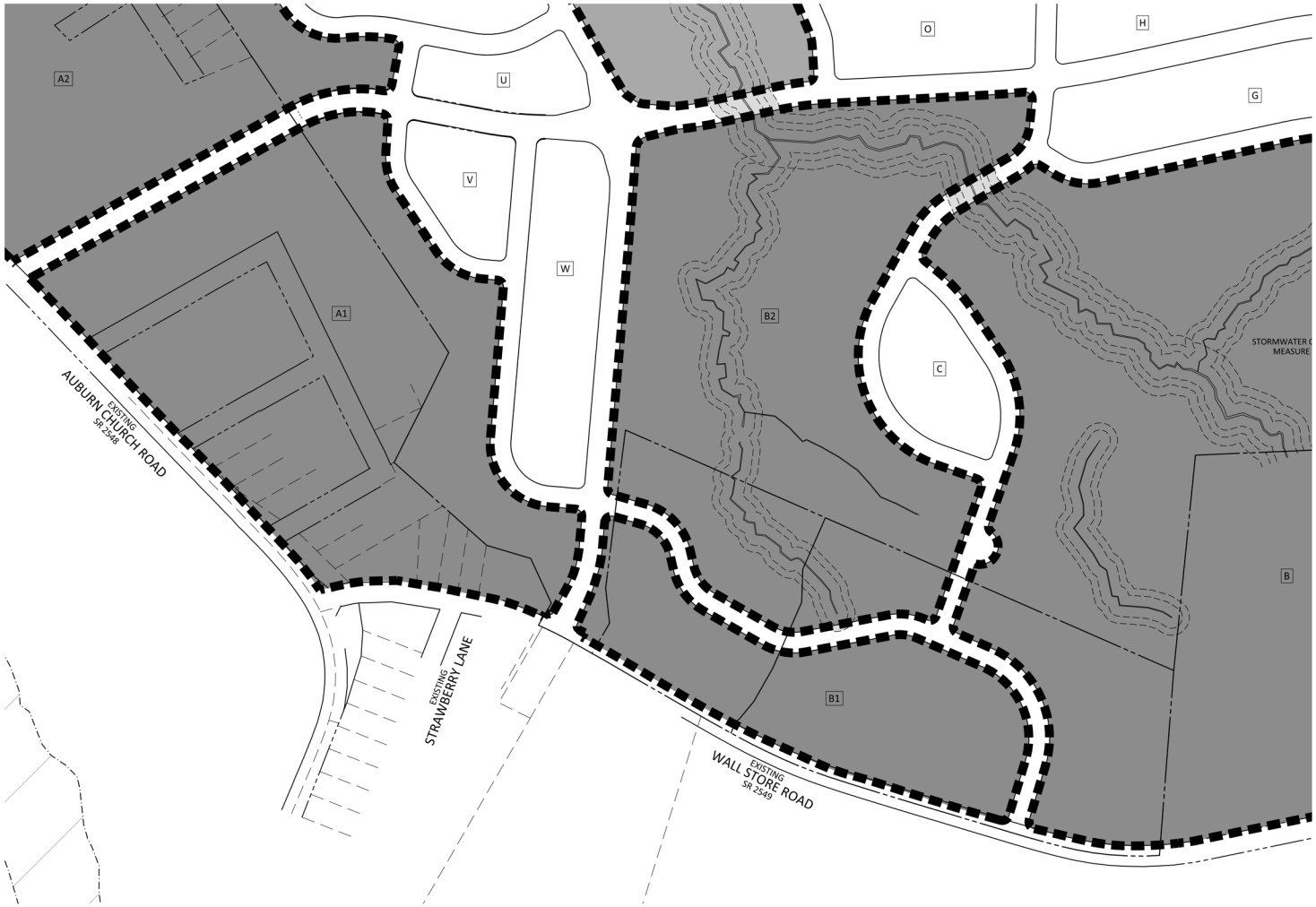

BLOCK PERIMETER LENGTH

BLOCK	STREETS	LENGTH	BLOCK PERIMETER (MAX.)
A	EXISTING G STREET, EXISTING AUBURN CHURCH ROAD, EXISTING JONES SAUSAGE ROAD, EXISTING ROCK QUARRY ROAD, STREET "A", STREET "B", STREET "M", STREET "U", STREET "Q"	**37,737 LF	2,500 LF
A1	EXISTING WALL STORE ROAD, EXISTING AUBURN CHURCH ROAD, STREET "N", STREET "O", STREET "P"	*4,821 LF	2,500 LF
A2	EXISTING G STREET, EXISTING AUBURN CHURCH ROAD, STREET "A", STREET "P", STREET "Q", STREET "S"	*4,405 LF	2,500 LF
B	EXISTING WALL STORE ROAD, STREET "B", STREET "C", STREET "E" , STREET "I", STREET "J", STREET "W"	**7,651 LF	2,500 LF
B1	EXISTING WALL STORE ROAD, STREET "N", STREET "W"	*3,465 LF	2,500 LF
B2	STREET "A", STREET "I", STREET "J", STREET "N", STREET "W"	*5,160 LF	2,500 LF
B3	EXISTING ROCK QUARRY ROAD, EXISTING WALL STORE ROAD, STREET "V", STREET "C"	*5,126 SF	2,500 LF
C	STREET "I", STREET "J"	1,336 LF	2,500 LF
D	STREET "B", STREET "C", STREET "D"	2,362 LF	3,750 LF
E	EXISTING ROCK QUARRY ROAD, STREET "A", STREET "C", STREET "D"	*2,873 LF	2,500 LF
F	STREET "A", STREET "B", STREET "D"	2,272 LF	3,750 LF
G	STREET "A", STREET "B", STREET "E", STREET "I"	*2,717 LF	3,750 LF
H	STREET "A", STREET "B", STREET "I", STREET "K"	*2,906 LF	2,500 LF
I	STREET "B", STREET "F", STREET "K"	1,123 LF	2,500 LF
J	STREET "B", STREET "F", STREET "G", STREET "K"	1,317 LF	2,500 LF
K	STREET "B", STREET "G", STREET "H", STREET "K"	1,414 LF	2,500 LF
L	STREET "B", STREET "H", STREET "I", STREET "K"	1,472 LF	2,500 LF
M	STREET "B", STREET "I", STREET "L", STREET "M"	1,926 LF	2,500 LF
N	STREET "I", STREET "K", STREET "L", STREET "M"	1,899 LF	2,500 LF
O	STREET "A", STREET "I", STREET "K", STREET "M"	1,655 LF	2,500 LF
P	STREET "N", STREET "Q", STREET "U"	696 LF	2,500 LF
Q	STREET "N", STREET "Q", STREET "T"	1,766 LF	2,500 LF
R	STREET "N", STREET "Q", STREET "S", STREET "T"	1,681 LF	2,500 LF
S	STREET "N", STREET "Q", STREET "R", STREET "S"	1,826 LF	2,500 LF
T	STREET "N", STREET "Q", STREET "R"	1,865 LF	2,500 LF
U	STREET "A", STREET "N", STREET "P", STREET "Q"	1,303 LF	2,500 LF
V	STREET "A", STREET "O", STREET "P"	1,202 LF	2,500 LF
W	STREET "A", STREET "N", STREET "O"	2,300 LF	3,750 LF

*MEETS BLOCK PERIMETER REQUIREMENTS PER 50% INCREASE WITH PEDESTRIAN ACCESS PATHWAY AND EASEMENT OR PRIVATE ALLEY
** SEE JUSTIFICATION STATEMENTS BELOW

JUSTIFICATION STATEMENTS:

BLOCK A: PER TC-6-19, 8.3.A.1.B.ii "THE RESULTING STREET CONNECTION, IF COMPLETED, WOULD NEITHER REDUCE THE PERIMETER OF THE OVERSIZED BLOCK BY AT LEAST 20 PERCENT NOR RESULT IN CONFORMING BLOCK PERIMETERS."
. AS SHOWN HERE, ADDITIONAL CONNECTIONS THAT WOULD BE REQUIRED FOR BLOCK "A" WOULD NOT REDUCE THE OVERSIZED BLOCK BY AT LEAST 20 PERCENT.

NC GRID (NAD83)

PRELIMINARY DRAWING - NOT RELEASED FOR CONSTRUCTION

McADAMS
The John R. McAdams Company, Inc.
One Glenwood Avenue
Suite 201
Raleigh, NC 27603
phone 919. 823. 4300
fax 919. 361. 2269
license number: C-0293, C-187
www.mcadamsco.com

CLIENT

DORAN COMPANIES
7803 GLENROY ROAD, SUITE 200
BLOOMINGTON, MINNESOTA, 55439-3126
PHONE: 952. 288. 2051

DORAN

BLUEJACK FALLS -9 ACRE TRACT
PRELIMINARY SUBDIVISION PLAN
2537 WALL STORE ROAD
RALEIGH, NORTH CAROLINA, 27610

[redacted]

REVISIONS

NO.	DATE	
2	01. 05. 2024	PER COR COMMENTS
3	03. 15. 2024	PER COR COMMENTS
4	05. 07. 2024	PER COR COMMENTS
5	06. 27. 2024	PER COR COMMENTS
6	02. 14. 2025	REV. P/L FOR 35' B2 PROTECTIVE YARD
7	05. 20. 2025	PER COR COMMENTS
8	08. 08. 2025	PER COR COMMENTS

PLAN INFORMATION

PROJECT NO.	2021110767
FILENAME	2021110767-PSP-BP1
CHECKED BY	NDW
DRAWN BY	KWH
SCALE	1" = 150'
DATE	08. 04. 2023

SHEET

BLOCK PERIMETER PLAN

C2.02

U:\Projects\DRN\2021110767\04-Production\Engineering\Site Plan - Construction Drawings\Current Drawings\Site Plan - Construction Drawings\2021110767-PSP-BP1.dwg, 8/12/2025 10:06:48 AM, Kevin Hughes

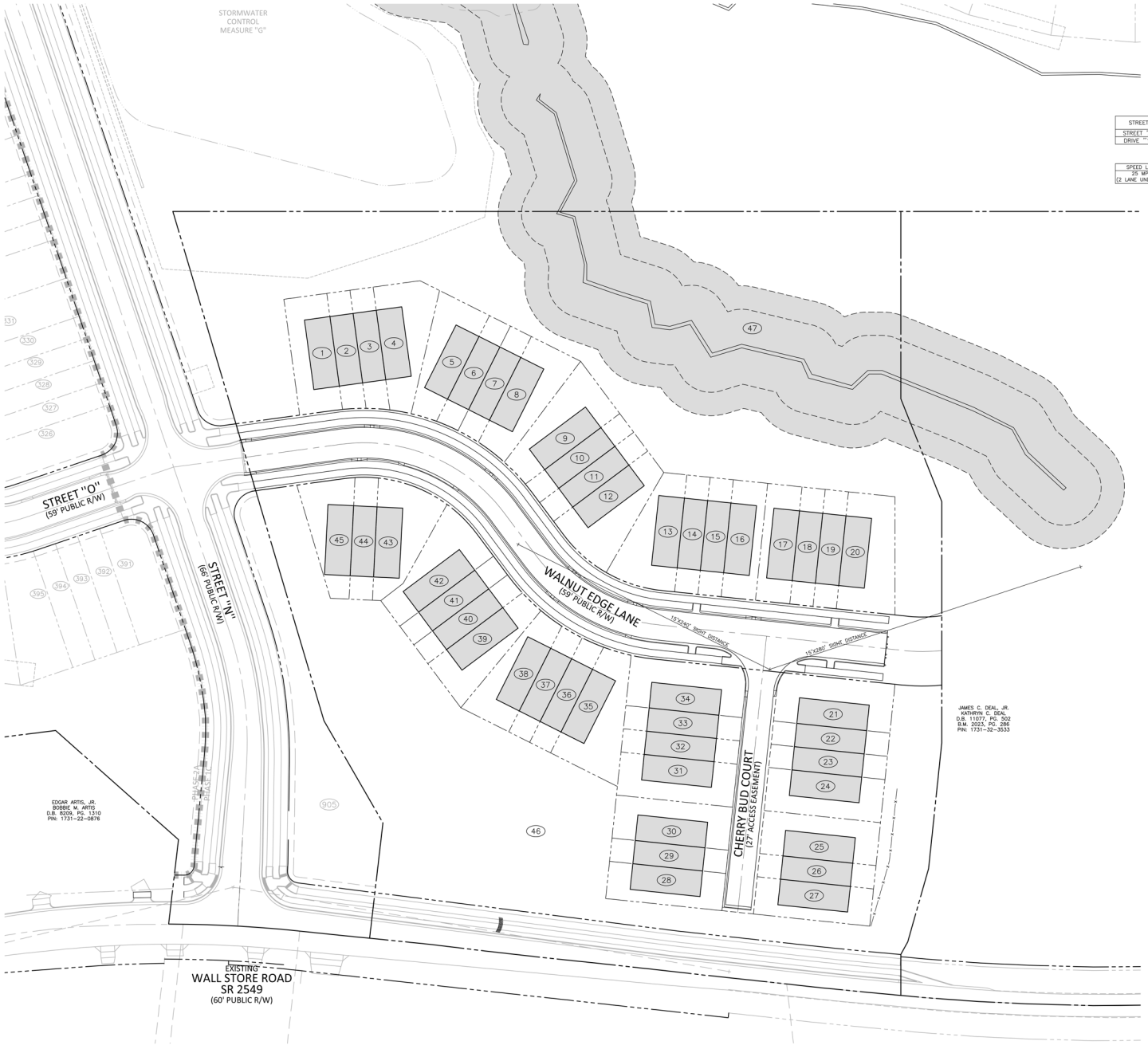

STREET UTILIZATION TABLE

STREET	LOT NUMBER	# LOTS FRONTING	TOTAL LOTS UTILIZING STREET
STREET "A"	1–21, 36–47	33	47
DRIVE "1"	22–35	14	14

SIGHT DISTANCE TRIANGLE TABLE

SPEED LIMIT	SIGHT DISTANCE TRIANGLE TYPE	LEFT TURN	RIGHT TURN
25 MPH (2 LANE UNDIVIDED)	SINGLE STAGE SIGHT DISTANCE TRIANGLE	15'x280'	15'x240'

NOTE

SPEED LIMIT 25 — PROPOSED SPEED LIMIT 25 MPH(R2-1)

NC GRID (NAD83)

GRAPHIC SCALE 0 20 40 80

1 INCH = 40 ft.

PRELIMINARY DRAWING - NOT RELEASED FOR CONSTRUCTION

McADAMS

The John R. McAdams Company, Inc.
One Glenwood Avenue
Suite 201
Raleigh, NC 27603

phone 919. 823. 4300
fax 919. 361. 2269
license number: C-0293, C-187

www.mcadamsco.com

CLIENT

DORAN COMPANIES
7803 GLENROY ROAD, SUITE 200
BLOOMINGTON, MINNESOTA, 55439-3126
PHONE: 952. 288. 2051

DORAN

BLUEJACK FALLS -9 ACRE TRACT
PRELIMINARY SUBDIVISION PLAN
2537 WALL STORE ROAD
RALEIGH, NORTH CAROLINA, 27610

[redacted]

REVISIONS

NO.	DATE	
2	01. 05. 2024	PER COR COMMENTS
3	03. 15. 2024	PER COR COMMENTS
4	05. 07. 2024	PER COR COMMENTS
5	06. 27. 2024	PER COR COMMENTS
6	02. 14. 2025	REV. P/L FOR 35' B2 PROTECTIVE YARD
7	05. 20. 2025	PER COR COMMENTS
8	08. 08. 2025	PER COR COMMENTS

PLAN INFORMATION

PROJECT NO.	2021110767
FILENAME	2021110767-PSP-T1
CHECKED BY	NDW
DRAWN BY	KWH
SCALE	1" = 40'
DATE	08. 04. 2023

SHEET

TRANSPORTATION PLAN

C2.03

U:\Projects\2021\2021110767\04-Production\Engineering\Site Plan - Construction Drawings\Current Drawings\Site Plan 2021110767-PSP-T1.dwg, 8/21/2025 10:07:00 AM, Kevin Hughes

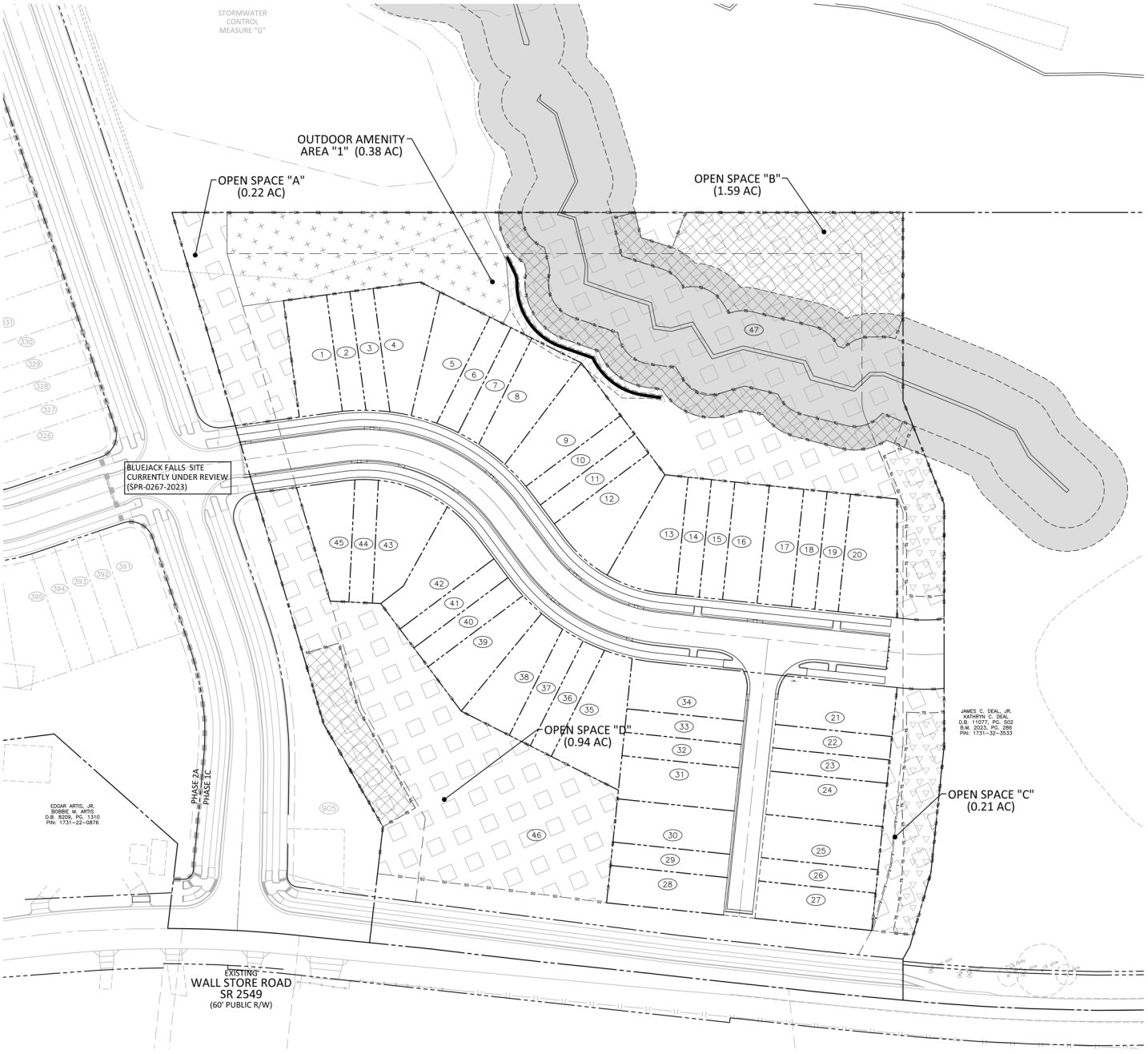

OUTDOOR AMENITY AREA		
NET SITE AREA	6.58 AC (286,594 SF)	
REQUIRED OUTDOOR AMENITY AREA	0.33 AC (5%) (14,330 SF)	"USABLE AREA"
AMENITY AREA "1"	0.38 AC (5.80%) (16,631 SF)	YES

OPEN SPACE	
NET SITE AREA	6.58 AC (286,594 SF)
REQUIRED OPEN SPACE	1.31 AC (57,319 SF) (20%)
PROVIDED OPEN SPACE	2.95 AC (128,650 SF) (45%)

OPEN SPACE DESCRIPTIONS	
OPEN SPACE AREA 'A' (7%)	TERTIARY OPEN SPACE
OPEN SPACE AREA 'B' (54%)	PRIMARY OPEN SPACE (BUFFERED AREA)
OPEN SPACE AREA 'C' (7%)	SECONDARY OPEN SPACE
OPEN SPACE AREA 'D' (32%)	SECONDARY OPEN SPACE

LEGEND	
OUTDOOR AMENITY	
OPEN SPACE	

SEE SHEET C0.00 FOR ALL PROJECT, SITE, GRADING, STORM DRAINAGE AND UTILITY NOTES

ALL CONSTRUCTION SHALL BE IN ACCORDANCE WITH THE CURRENT CITY OF RALEIGH AND NCDOT (WHERE APPLICABLE) ENGINEERING DESIGN AND CONSTRUCTION STANDARDS

N
NC GRID (NAD83)
GRAPHIC SCALE
0 20 40 80
1 INCH = 40 ft.

PRELIMINARY DRAWING - NOT RELEASED FOR CONSTRUCTION

McADAMS
The John R. McAdams Company, Inc.
One Glenwood Avenue
Suite 201
Raleigh, NC 27603
phone 919. 823. 4300
fax 919. 361. 2269
license number: C-0293, C-187
www.mcadamsco.com

CLIENT

DORAN COMPANIES
7803 GLENROY ROAD, SUITE 200
BLOOMINGTON, MINNESOTA, 55439-3126
PHONE: 952. 288. 2051

DORAN

BLUEJACK FALLS -9 ACRE TRACT
PRELIMINARY SUBDIVISION PLAN
2537 WALL STORE ROAD
RALEIGH, NORTH CAROLINA, 27610

[redacted]

REVISIONS

NO.	DATE	
2	01. 05. 2024	PER COR COMMENTS
3	03. 15. 2024	PER COR COMMENTS
4	05. 07. 2024	PER COR COMMENTS
5	06. 27. 2024	PER COR COMMENTS
6	02. 14. 2025	REV. P/L FOR 35' B2 PROTECTIVE YARD
7	05. 20. 2025	PER COR COMMENTS
8	08. 08. 2025	PER COR COMMENTS

PLAN INFORMATION

PROJECT NO.	2021110767
FILENAME	2021110767-PSP-S3
CHECKED BY	NDW
DRAWN BY	KWH
SCALE	1" = 40'
DATE	08. 04. 2023

SHEET

OPEN AREA PLAN

C2.04

U:\Projects\DRN\2021110767\04-Production\Engineering\Site Plan - Construction Drawings\Current Drawings\Site Plan 2021110767-PSP-S3.dwg, 8/12/2025 10:07:12 AM, Kevin Hughes

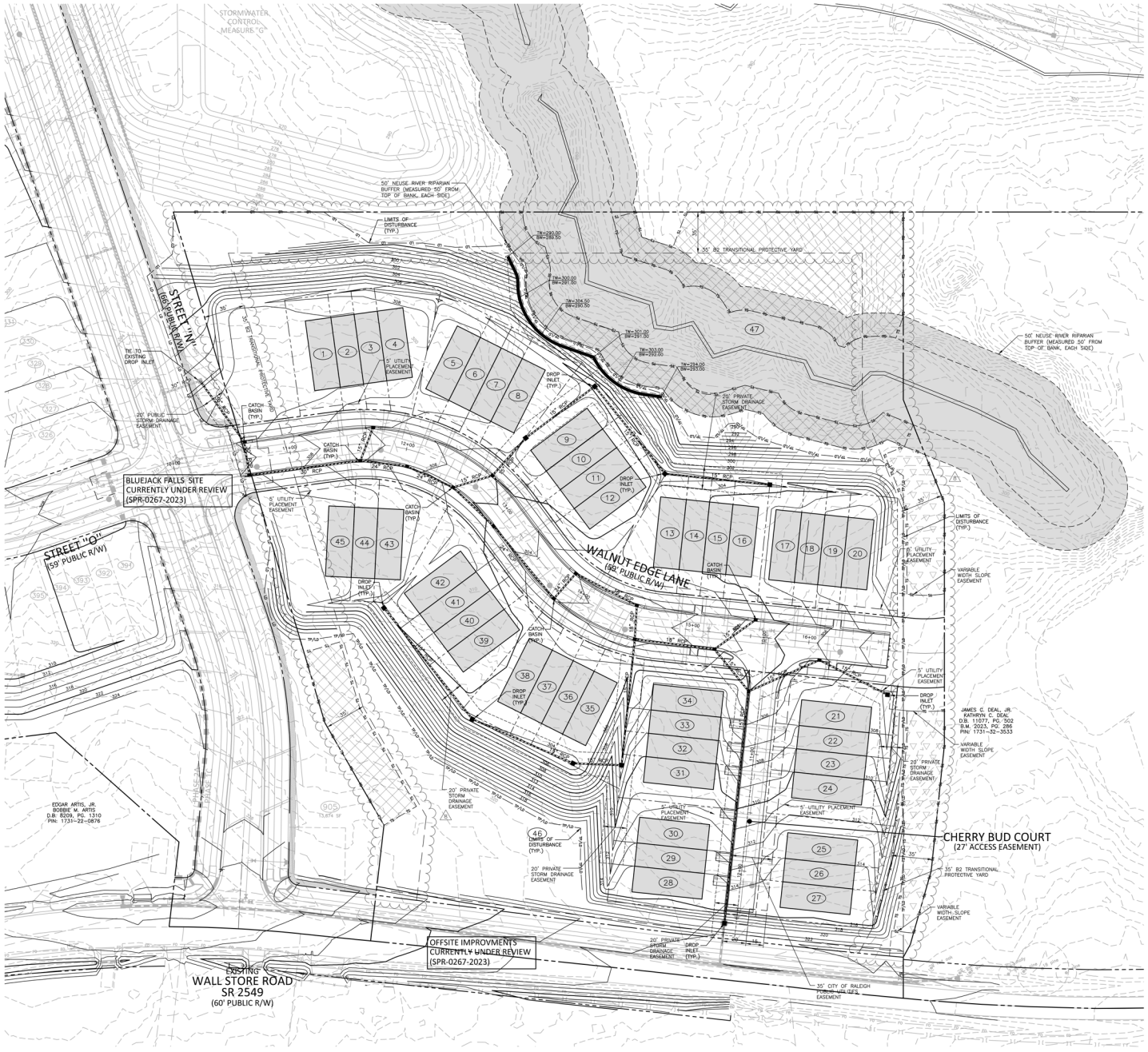

GRADING LEGEND

	FLARED END SECTION
	ENDWALL SECTION
	CATCH BASIN
	DROP INLET
	STORM SERVICE INLET
	STORM SERVICE ROOF-DRAIN
	JUNCTION BOX
	DRAINAGE FLOW ARROW
	LINE BREAK SYMBOL
250.50 / 250.00	TOP & BOTTOM CURB ELEVATIONS
TW=223.00 / BW=213.00	TOP OF WALL ELEVATION / BOTTOM OF WALL ELEVATION (NOTE: BOTTOM OF WALL IS GROUND ELEVATION NOT WALL FOUNDATION)
+ 250.60	SPOT ELEVATION
	STORM DRAINAGE
	STORM SERVICE LINE
RD RD RD	ROOF DRAIN, 8" ADS NON-PERFORATED TUBING OR EQUAL 1.0% MIN. SLOPE 3' MIN. COVER PVC SCHEDULE 40 IN TRAFFIC AREAS
TP TP TP	TREE PROTECTION FENCE
LD LD	LIMITS OF DISTURBANCE
	WOODED AREA
250	MAJOR CONTOUR
252	MINOR CONTOUR
250	EXISTING MAJOR CONTOUR
252	EXISTING MINOR CONTOUR
	EASEMENT LINE
TS TS TS	TREE CONSERVATION AREA
TS TS TS	TREE PROTECTION AREA

SEE SHEET C0.00 FOR ALL PROJECT, SITE, GRADING, STORM DRAINAGE AND UTILITY NOTES

ALL CONSTRUCTION SHALL BE IN ACCORDANCE WITH THE CURRENT CITY OF RALEIGH AND NCDOT (WHERE APPLICABLE) ENGINEERING DESIGN AND CONSTRUCTION STANDARDS

N

NC GRID (NAD83)

GRAPHIC SCALE

0 20 40 80

1 INCH = 40 ft.

PRELIMINARY DRAWING - NOT RELEASED FOR CONSTRUCTION

McADAMS

The John R. McAdams Company, Inc.
One Glenwood Avenue
Suite 201
Raleigh, NC 27603

phone 919. 823. 4300
fax 919. 361. 2269
license number: C-0293, C-187

www.mcadamsco.com

CLIENT

DORAN COMPANIES
7803 GLENROY ROAD, SUITE 200
BLOOMINGTON, MINNESOTA, 55439-3126
PHONE: 952. 288. 2051

DORAN

BLUEJACK FALLS -9 ACRE TRACT
PRELIMINARY SUBDIVISION PLAN
2537 WALL STORE ROAD
RALEIGH, NORTH CAROLINA, 27610

[redacted]

REVISIONS

NO.	DATE	
2	01. 05. 2024	PER COR COMMENTS
3	03. 15. 2024	PER COR COMMENTS
4	05. 07. 2024	PER COR COMMENTS
5	06. 27. 2024	PER COR COMMENTS
6	02. 14. 2025	REV. P/L FOR 35' B2 PROTECTIVE YARD
7	05. 20. 2025	PER COR COMMENTS
8	08. 08. 2025	PER COR COMMENTS

PLAN INFORMATION

PROJECT NO.	2021110767
FILENAME	2021110767-PSP-G1
CHECKED BY	NDW
DRAWN BY	KWH
SCALE	1" = 40'
DATE	08. 04. 2023

SHEET

GRADING AND STORM DRAINAGE PLAN

C3.00

U:\Projects\2021\2021110767\04-Production\Engineering\Site Plan - Construction Drawings\Current Drawings\9-Acre Tract\2021110767-PSP-G1.dwg, 8/12/2025 10:07:26 AM, Kevin Hughes

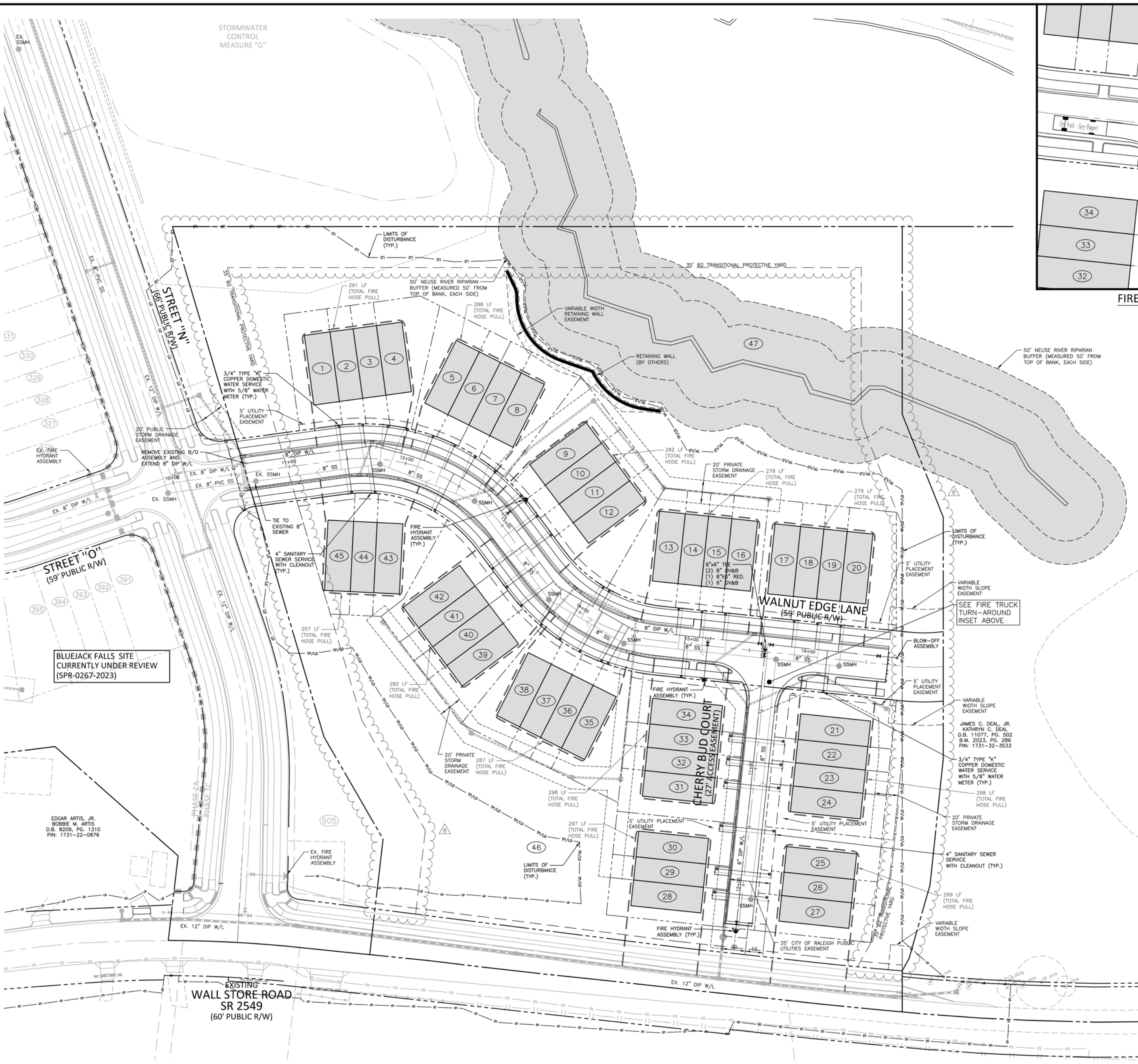

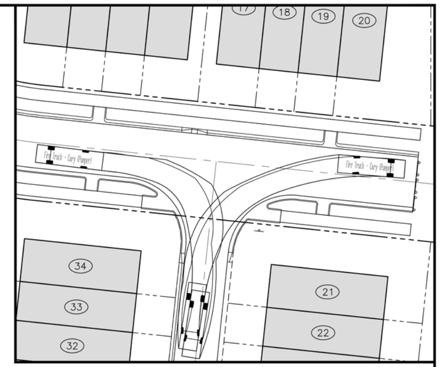

FIRE TRUCK TURN-AROUND INSET

SCALE: 1"=30'

UTILITY LEGEND

FIRE HYDRANT ASSEMBLY
FIRE DEPARTMENT CONNECTION (FDC)
WATER METER
WATER VALVE
POST INDICATOR VALVE
VALVE IN MANHOLE
METER & VAULT
BACKFLOW PREVENTER
REDUCER
PLUG
BLOW-OFF ASSEMBLY
SANITARY SEWER MANHOLE
SEWER CLEAN-OUT
GREASE TRAP
SEWER FLOW DIRECTION ARROW
YARD LIGHTS
LIGHT POLE
POWER POLE
LINE BREAK SYMBOL
WATERLINE
WATER SERVICE LINE
UTILITY SLEEVE
SANITARY SEWER
SEWER SERVICE LINE
SEWER FORCE MAIN
GAS LINE
OVERHEAD UTILITY
UNDERGROUND ELECTRIC
TELEPHONE
EASEMENT LINE
FIRE HOSE PULL PATH

SEE SHEET C0.00 FOR ALL PROJECT, SITE, GRADING, STORM DRAINAGE AND UTILITY NOTES

ALL CONSTRUCTION SHALL BE IN ACCORDANCE WITH THE CURRENT CITY OF RALEIGH AND NCDOT (WHERE APPLICABLE) ENGINEERING DESIGN AND CONSTRUCTION STANDARDS

NC GRID (NAD83)

GRAPHIC SCALE

1 inch = 40 ft.

PRELIMINARY DRAWING - NOT RELEASED FOR CONSTRUCTION

McADAMS
The John R. McAdams Company, Inc.
One Glenwood Avenue
Suite 201
Raleigh, NC 27603
phone 919. 823. 4300
fax 919. 361. 2269
license number: C-0293, C-187
www.mcadamsco.com

CLIENT

DORAN COMPANIES
7803 GLENROY ROAD, SUITE 200
BLOOMINGTON, MINNESOTA, 55439-3126
PHONE: 952. 288. 2051

DORAN

BLUEJACK FALLS -9 ACRE TRACT

PRELIMINARY SUBDIVISION PLAN
2537 WALL STORE ROAD
RALEIGH, NORTH CAROLINA, 27610

[redacted]

REVISIONS

NO.	DATE	
2	01. 05. 2024	PER COR COMMENTS
3	03. 15. 2024	PER COR COMMENTS
4	05. 07. 2024	PER COR COMMENTS
5	06. 27. 2024	PER COR COMMENTS
6	02. 14. 2025	REV. P/L FOR 35' B2 PROTECTIVE YARD
7	05. 20. 2025	PER COR COMMENTS
8	08. 08. 2025	PER COR COMMENTS

PLAN INFORMATION

PROJECT NO.	2021110767
FILENAME	2021110767-PSP-U1
CHECKED BY	NDW
DRAWN BY	KWH
SCALE	1" = 40'
DATE	08. 04. 2023

SHEET

UTILITY PLAN

C4.00

SITE DETAILS — C8.00

T-10.01.1 DRIVEWAY AND SIDEWALK DETAIL

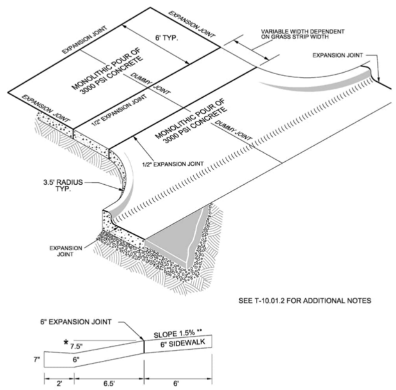

* USE 6.5" WHEN DRIVEWAY IS USED IN LIEU OF A WHEELCHAIR RAMP TO ACCOMMODATE 12:1 MAXIMUM SLOPE (ADA COMPLIANT), SUCH AS IN A CUL-DE SAC.

** 2.08% (1:48) max

SHEET 1 OF 4

CITY OF RALEIGH
STANDARD DETAIL
REVISIONS | DATE: 8/2020 | NOT TO SCALE
DATE: 12/2022
DRIVEWAY AND SIDEWALK DETAIL
T-10.01.1

T-10.01.2 DRIVEWAY AND SIDEWALK DETAIL

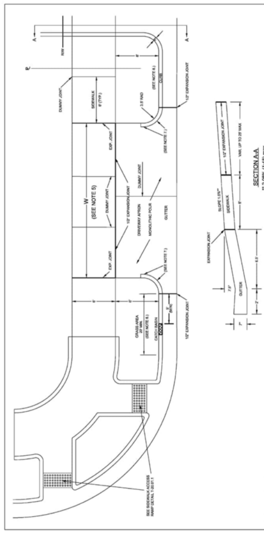

NOTES:
1. WHEN A DRIVEWAY IS TO BE CONSTRUCTED WHERE FINAL LAYER OF ASPHALT HAS BEEN PLACED, THE CURB CAN BE SAW CUT IN A STRAIGHT LINE AND REMOVED. IF THE FINAL LAYER HAS NOT BEEN PLACED, THE ENTIRE CURB AND GUTTER SHALL BE REMOVED AND THE DRIVEWAY SHALL BE A MONOLITHIC POUR USING 3000 PSI ,MAX. 4" SLUMP CONCRETE.
2. EXPANSION MATERIAL SHALL EXTEND THE FULL DEPTH OF THE CONCRETE. 1/2" EXPANSION JOINTS ALONG SIDEWALK SHALL BE LOCATED AT NOT MORE THAN 40' INTERVALS & DUMMY CONSTRUCTION JOINTS AT 6' INTERVALS. DUMMY JOINTS SHALL BE AT LEAST 1/3 THE SLAB THICKNESS IN DEPTH.
3. SLOPE ON UNPAVED AREAS BETWEEN BACK OF CURB & SIDEWALK SHALL BE 1/4" PER FT.
4. NO EXPOSED AGGREGATE OR OTHER SPECIAL SURFACE TREATMENTS IN ROW.
5. W DIMENSION AS SHOWN ON PLAN VIEW SHALL BE AS FOLLOWS: 10' MINIMUM, 18' MAXIMUM FOR RESIDENTIAL DRIVEWAYS 36' MAXIMUM FOR COMMERCIAL DRIVEWAYS
6. THE DISTANCE FROM THE END OF A STREET CURB RADIUS TO THE BEGINNING OF THE DRIVEWAY RADIUS SHOULD BE MINIMUM OF 20 FT.
7. CURB RADIUS TO BE DISSIPATED BETWEEN LIMITS NOTED ABOVE.
8. 7' MIN. BETWEEN DRIVEWAYS ON ADJACENT LOTS. 45' MIN. BETWEEN DRIVEWAYS ON SAME LOT.
9. NO RADIUS ENCROACHMENT SHALL BE ALLOWED ACROSS AN ADJOINING PROP. FRONTAGE. THIS IS DETERMINED BY EXTENDING A LINE FROM THE PROPERTY CORNER PERPENDICULAR TO THE RW TO THE CURB AND GUTTER LOCATION.
10. ALL CONCRETE MUST BE POURED ON SAME DAY AS INSPECTION OR RE-INSPECTION IS REQUIRED.
11. FINISH THE SURFACE TO GRADE AND CROSS SECTION WITH A FLOAT, TROWEL SMOOTH AND FINISH WITH A BROOM
12. DRIVEWAY RADIUS SHALL BE A MINIMUM OF 5' FROM ANY CATCH BASIN.
13. WHERE UTILITY BOXES/VAULTS MUST BE LOCATED IN THE SIDEWALK, THEY SHALL HAVE A MINIMUM 3' WIDE FRAME OF CONCRETE AROUND THEM.

SHEET 2 OF 4

CITY OF RALEIGH
STANDARD DETAIL
REVISIONS | DATE: 8/2020 | NOT TO SCALE
DATE: 12/2022
DATE: 08/2023
DRIVEWAY AND SIDEWALK DETAIL
T-10.01.2

T-10.02 DRIVEWAY FOR VALLEY TYPE CURB & GUTTER

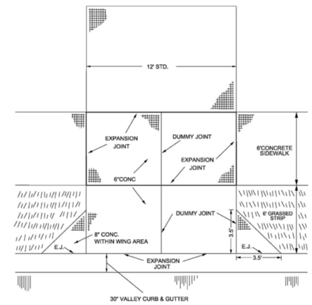

NOTES:
1. SEE STANDARD DETAIL T-10.26.1 FOR CURB AND GUTTER DETAILS.
2. EXPANSION MATERIAL SHALL EXTEND THE FULL DEPTH OF THE CONCRETE.
3. ALL CONCRETE SHALL BE 3000 PSI (MIN.).

CITY OF RALEIGH
STANDARD DETAIL
REVISIONS | DATE: 8/2020 | NOT TO SCALE
DRIVEWAY FOR VALLEY TYPE CURB & GUTTER
T-10.02

T-10.04 DRIVEWAY GRADES

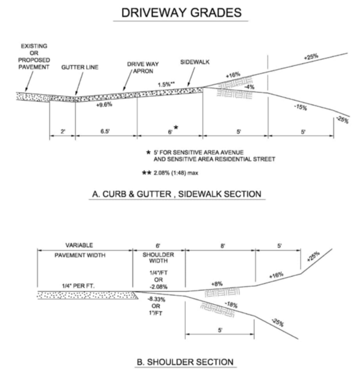

NOTES:
IF THE SLOPE BETWEEN THE TOP OF CURB AND GUTTER AND A POINT 30 FEET FROM THE CURB AND GUTTER EXCEEDS 20%, THIS SLOPE SHALL BE ADJUSTED TO A MAXIMUM OF 8.33% (1"/FT) UP OR 4.17% (1/2" /FT) DOWN.

CITY OF RALEIGH
STANDARD DETAIL
REVISIONS | DATE: 8/2020 | NOT TO SCALE
DATE: 12/2022
DRIVEWAY GRADES
T-10.04

T-10.11 NEIGHBORHOOD LOCAL STREET (TWO - WAY)

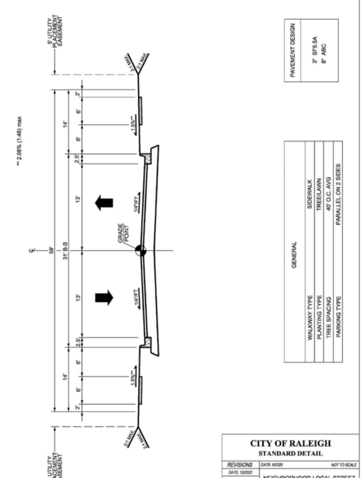

PAVEMENT DESIGN	
3" SF9.5A	
8" ABC	

GENERAL	
WALKWAY TYPE	SIDEWALK
PLANTING TYPE	TREE/LAWN
TREE SPACING	40' O.C. AVG
PARKING TYPE	PARALLEL ON 2 SIDES

CITY OF RALEIGH
STANDARD DETAIL
REVISIONS | DATE: 8/2020 | NOT TO SCALE
DATE: 12/2022
NEIGHBORHOOD LOCAL STREET (TWO - WAY)
T-10.11

T-10.22 ALLEY

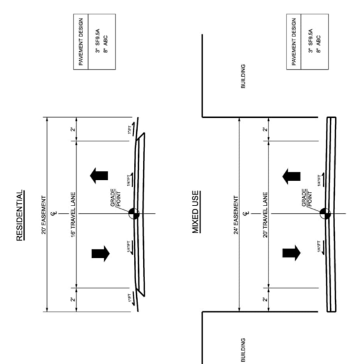

CITY OF RALEIGH
STANDARD DETAIL
REVISIONS | DATE: 8/2020 | NOT TO SCALE
ALLEY
T-10.22

PRELIMINARY DRAWING - NOT RELEASED FOR CONSTRUCTION

X:\Projects\DRN\2021110767\04-Production\Engineering\Site Plan - Construction Drawings\Current Drawings\9-Acre Tract\2021110767-PSP-D1.dwg, 8/12/2025 10:07:49 AM, Kevin Hughes

MCADAMS
The John R. McAdams Company, Inc.
One Glenwood Avenue
Suite 201
Raleigh, NC 27603
phone 919. 823. 4300
fax 919. 361. 2269
license number: C-0293, C-187
www.mcadamsco.com

CLIENT

DORAN COMPANIES
7803 GLENROY ROAD, SUITE 200
BLOOMINGTON, MINNESOTA, 55439-3126
PHONE: 952. 288. 2051

DORAN

BLUEJACK FALLS -9 ACRE TRACT
PRELIMINARY SUBDIVISION PLAN
2537 WALL STORE ROAD
RALEIGH, NORTH CAROLINA, 27610

[redacted]

REVISIONS

NO.	DATE	
2	01. 05. 2024	PER COR COMMENTS
3	03. 15. 2024	PER COR COMMENTS
4	05. 07. 2024	PER COR COMMENTS
5	06. 27. 2024	PER COR COMMENTS
6	02. 14. 2025	REV. P/L FOR 35' B2 PROTECTIVE YARD
7	05. 20. 2025	PER COR COMMENTS
8	08. 08. 2025	PER COR COMMENTS

PLAN INFORMATION

PROJECT NO.	2021110767
FILENAME	2021110767-PSP-D1
CHECKED BY	NDW
DRAWN BY	KWH
SCALE	N.T.S.
DATE	08. 04. 2023

SHEET

SITE DETAILS
C8.00

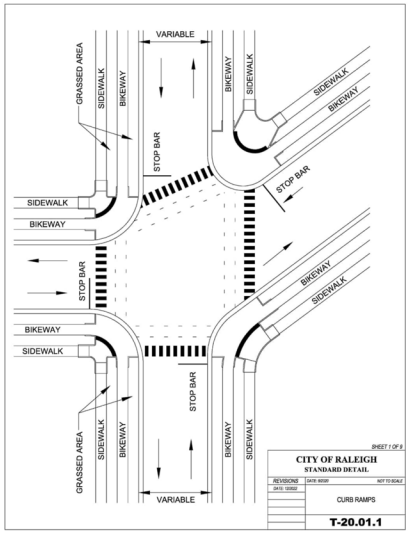

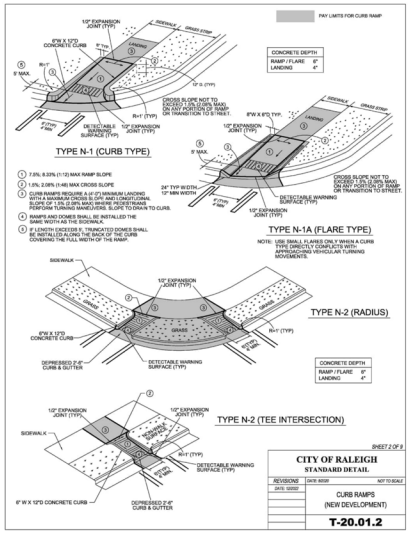

CITY OF RALEIGH
CURB RAMPS
GENERAL NOTES

1. CITY OF RALEIGH STANDARD CURB RAMPS HAVE BEEN DEVELOPED IN ACCORDANCE WITH THE AMERICANS WITH DISABILITIES ACT (ADA) AND PUBLIC RIGHT OF WAY ACCESS GUIDELINES (PROWAG).
2. CURB RAMPS SHALL BE PROVIDED AT LOCATIONS AS SHOWN ON THE PLANS OR AS DIRECTED BY THE ENGINEER. SIDEWALK ACCESS RAMPS SHALL BE LOCATED AS INDICATED IN THE DETAIL. HOWEVER, THE LOCATION MAY BE ADJUSTED IN COORDINATION WITH THE CITY OF RALEIGH WHERE EXISTING LIGHT POLES, FIRE HYDRANTS, DROP INLETS, ETC. AFFECT PLACEMENT.
3. DOUBLE WHEELCHAIR RAMPS ARE TO BE INSTALLED AT ALL PUBLIC STREET INTERSECTIONS WHERE SIDEWALK IS REQUIRED.
4. THE WALKING SURFACE SHALL BE SLIP RESISTANT. THE COLOR FOR THE DETECTABLE WARNING AREA SHALL BE YELLOW FOR CONTRAST.
5. NO SLOPE ON THE SIDEWALK ACCESS RAMP SHALL EXCEED 1"/FT (12:1) IN RELATIONSHIP TO THE GRADE OF THE STREET.
6. IN NO CASE SHALL THE WIDTH OF THE SIDEWALK ACCESS RAMP BE LESS THAN 48" ALL RAMPS SHALL BE INSTALLED THE SAME WIDTH AS THE SIDEWALK.
7. USE CLASS A (3000 PSI) CONCRETE WITH A SIDEWALK FINISH IN ORDER TO OBTAIN A ROUGH NONSKID SURFACE.
8. A 1/2" EXPANSION JOINT INSTALLED FULL DEPTH WILL BE REQUIRED WHERE THE CONCRETE SIDEWALK ACCESS RAMP JOINS THE CURB AND ALSO WHERE NEW CONCRETE ABUTS EXISTING CONCRETE.
9. CURB RAMPS SHOULD BE PLACED PARALLEL TO THE DIRECTION OF TRAVEL.

SHEET 8 OF 9
CITY OF RALEIGH
STANDARD DETAIL
CURB RAMP NOTES
T-20.01.8

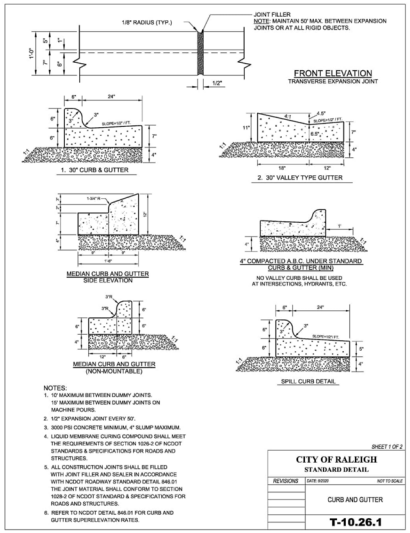

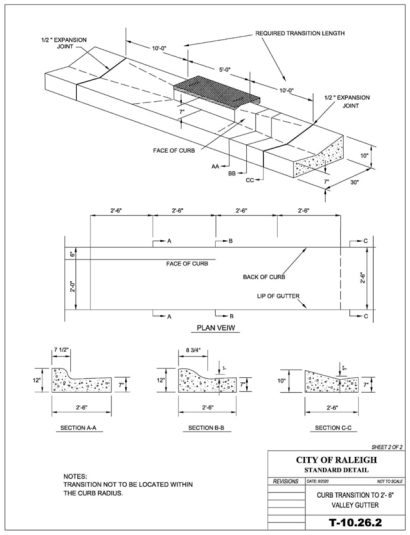

NOTES:
TRANSITION NOT TO BE LOCATED WITHIN THE CURB RADIUS.

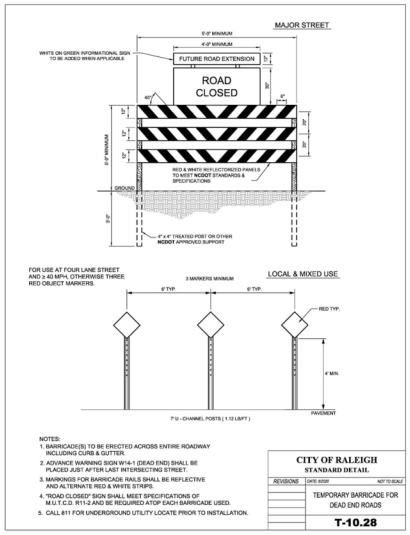

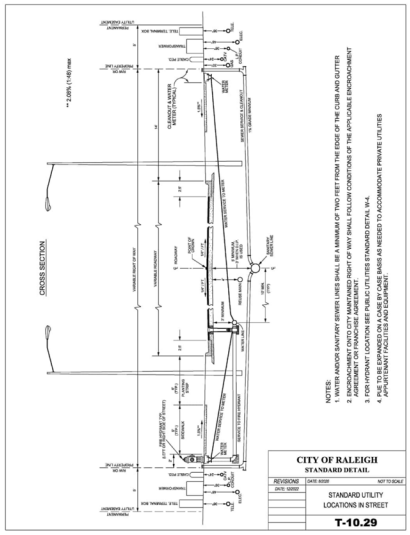

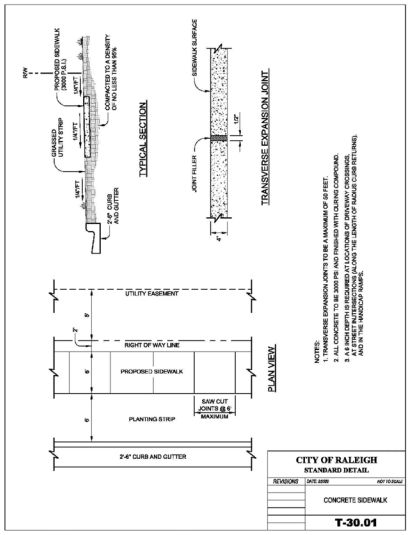

PRELIMINARY DRAWING - NOT RELEASED FOR CONSTRUCTION

McADAMS
The John R. McAdams Company, Inc.
One Glenwood Avenue
Suite 201
Raleigh, NC 27603
phone 919. 823. 4300
fax 919. 361. 2269
license number: C-0293, C-187
www.mcadamsco.com

CLIENT

DORAN COMPANIES
7803 GLENROY ROAD, SUITE 200
BLOOMINGTON, MINNESOTA, 55439-3126
PHONE: 952. 288. 2051

DORAN

BLUEJACK FALLS -9 ACRE TRACT
PRELIMINARY SUBDIVISION PLAN
2537 WALL STORE ROAD
RALEIGH, NORTH CAROLINA, 27610

[redacted]

REVISIONS

NO.	DATE	
2	01. 05. 2024	PER COR COMMENTS
3	03. 15. 2024	PER COR COMMENTS
4	05. 07. 2024	PER COR COMMENTS
5	06. 27. 2024	PER COR COMMENTS
6	02. 14. 2025	REV. P/L FOR 35' B2 PROTECTIVE YARD
7	05. 20. 2025	PER COR COMMENTS
8	08. 08. 2025	PER COR COMMENTS

PLAN INFORMATION

PROJECT NO.	2021110767
FILENAME	2021110767-PSP-D1
CHECKED BY	NDW
DRAWN BY	KWH
SCALE	N.T.S.
DATE	08. 04. 2023

SHEET

SITE DETAILS
C8.01

U:\Projects\DRN\2021110767\04-Production\Engineering\Site Plan - Construction Drawing\Current Drawings\9-Acre Tract\2021110767-PSP-D1.dwg, 8/12/2025 10:07:55 AM, Kevin Hughes

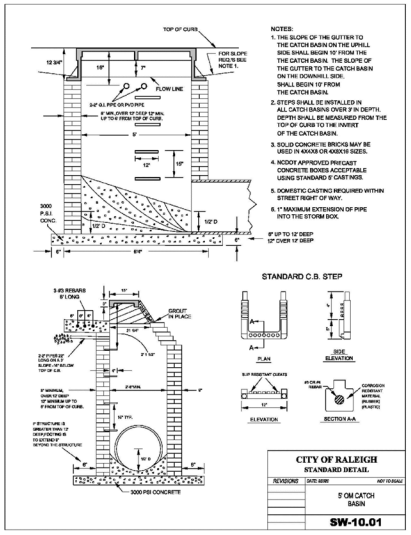

CITY OF RALEIGH
STANDARD DETAIL

REVISIONS	DATE: 02/02	NOT TO SCALE
	5' OM CATCH BASIN	
	SW-10.01	

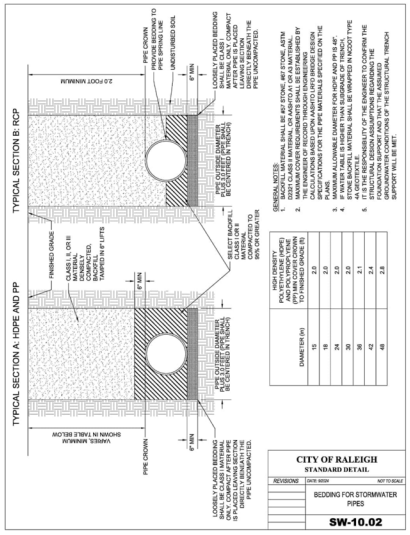

HDPE/PP/RCP	15"	18"	24"	30"	36"	42"	48"
PVC/TYP/HDPE (HDPE) (PP) MAX COVER (PP) MIN COVER CHOKING TO FINISHED GRADE (ft)	2.0	2.0	2.0	2.0	2.1	2.4	2.6

CITY OF RALEIGH
STANDARD DETAIL

REVISIONS	DATE: 02/02	NOT TO SCALE
	BEDDING FOR STORMWATER PIPES	
	SW-10.02	

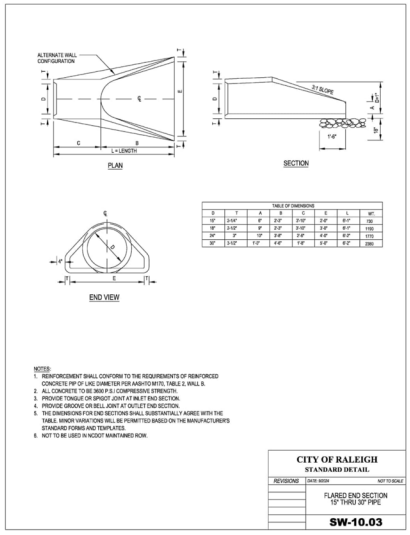

TABLE OF DIMENSIONS							
D	T	A	B	C	E	L	W*
12"	3-1/4"	8"	2'-0"	2'-10"	3'-0"	8'-0"	(18)
18"	3-1/2"	9"	2'-6"	3'-10"	3'-0"	8'-0"	(150)
24"	3"	12"	3'-0"	3'-0"	4'-0"	8'-0"	(170)
30"	3-1/2"	1'-0"	4'-0"	1'-0"	5'-0"	8'-0"	(280)

CITY OF RALEIGH
STANDARD DETAIL

REVISIONS	DATE: 02/02	NOT TO SCALE
	FLARED END SECTION 15" THRU 30" PIPE	
	SW-10.03	

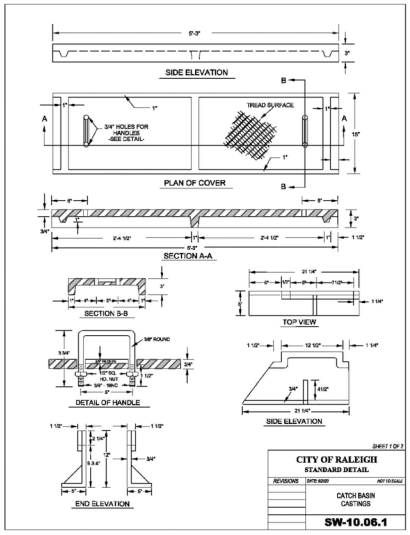

CITY OF RALEIGH
STANDARD DETAIL

REVISIONS	DATE: 02/02	NOT TO SCALE
	CATCH BASIN CASTINGS	
	SW-10.06.1	

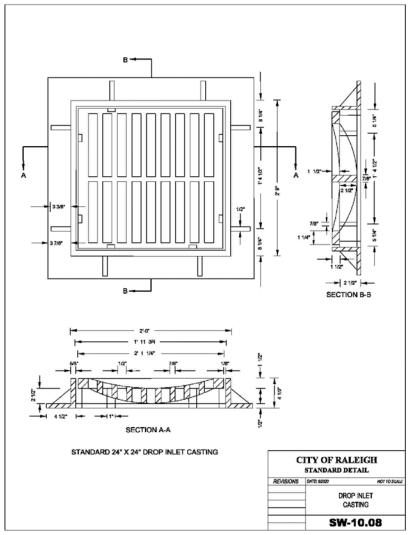

CITY OF RALEIGH
STANDARD DETAIL

REVISIONS	DATE: 02/02	NOT TO SCALE
	DROP INLET CASTING	
	SW-10.08	

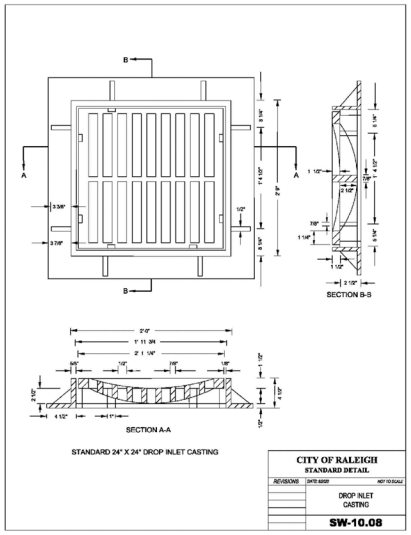

CITY OF RALEIGH
STANDARD DETAIL

REVISIONS	DATE: 02/02	NOT TO SCALE
	DROP INLET CASTING	
	SW-10.08	

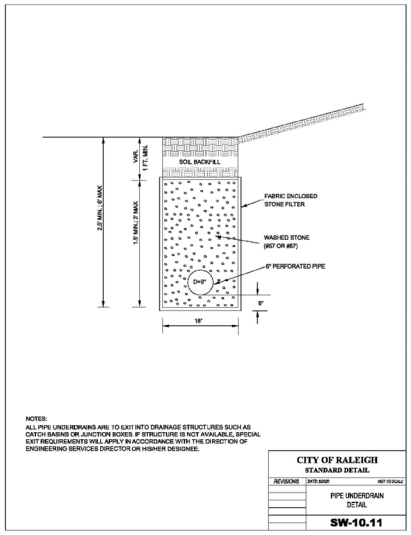

CITY OF RALEIGH
STANDARD DETAIL

REVISIONS	DATE: 02/02	NOT TO SCALE
	PIPE UNDERDRAIN DETAIL	
	SW-10.11	

PRELIMINARY DRAWING - NOT RELEASED FOR CONSTRUCTION

McADAMS
The John R. McAdams Company, Inc.
One Glenwood Avenue
Suite 201
Raleigh, NC 27603
phone 919. 823. 4300
fax 919. 361. 2269
license number: C-0293, C-187
www.mcadamsco.com

CLIENT

DORAN COMPANIES
7803 GLENROY ROAD, SUITE 200
BLOOMINGTON, MINNESOTA, 55439-3126
PHONE: 952. 288. 2051

DORAN

BLUEJACK FALLS -9 ACRE TRACT
PRELIMINARY SUBDIVISION PLAN
2537 WALL STORE ROAD
RALEIGH, NORTH CAROLINA, 27610

[redacted]

REVISIONS

NO.	DATE	
2	01. 05. 2024	PER COR COMMENTS
3	03. 15. 2024	PER COR COMMENTS
4	05. 07. 2024	PER COR COMMENTS
5	06. 27. 2024	PER COR COMMENTS
6	02. 14. 2025	REV. P/L FOR 35' B2 PROTECTIVE YARD
7	05. 20. 2025	PER COR COMMENTS
8	08. 08. 2025	PER COR COMMENTS

PLAN INFORMATION

PROJECT NO.	2021110767
FILENAME	2021110767-PSP-D1
CHECKED BY	NDW
DRAWN BY	KWH
SCALE	N.T.S.
DATE	08. 04. 2023

SHEET

STORM DRAINAGE DETAILS

C8.02

L:\Projects\DRN\2021110767\04-Production\Engineering\Site Plan - Construction Drawings\Current Drawings\9-Acre Tract\2021110767-PSP-D1.dwg, 8/21/2025 10:07:39 AM, Kevin Hughes

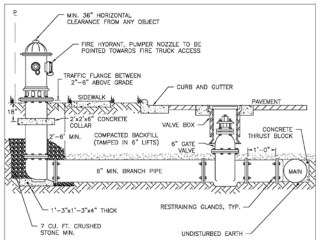

NOTES:
1. FIRE HYDRANT SHALL BE AS MANUFACTURED: MUELLER, AMERICAN DARLING, KENNEDY OR CLOW.
2. BRANCH PIPE SHALL BE DUCTILE IRON AWWA C150.
3. 6" GATE VALVE SHALL BE AWWA C500 OPEN LEFT.
4. RODS AND BOLTS SHALL BE ¾" 316 STAINLESS STEEL.
5. FIRE HYDRANTS WILL BE INSTALLED IN TRUE VERTICAL POSITION.
6. RODS SHALL NOT BE COUPLED MORE THAN ONCE. IF THE LENGTH FROM THE VALVE TO THE HYDRANT EXCEEDS 20' THEN A MECHANICAL RESTRAINING GLAND WITH A REBAR CAGE SHALL BE INSTALLED NO MORE THAN 10' FROM HYDRANT AND POURED IN CONCRETE.
7. FIRE HYDRANTS TO BE LOCATED IN ROW OR 2.5 FOOT EASEMENT (ON ALL SIDES OF HYDRANT) FOOT EASEMENT ADJACENT TO ROW.
8. ANYTIME SITE WORK, CONSTRUCTION, ROAD WORK, OR ANY OTHER WORK CHANGES THE GRADE OF THE FIRE HYDRANT, THE PERSON RESPONSIBLE FOR THE WORK IS RESPONSIBLE FOR ADJUSTING THE FIRE HYDRANT TO STAY WITHIN COMPLIANCE.

CITY OF RALEIGH
STANDARD DETAIL
REVISIONS | DATE: 01/18/2025 | NOT TO SCALE
STANDARD FIRE HYDRANT INSTALLATION (RESTRAINT GLANDS)
W-4

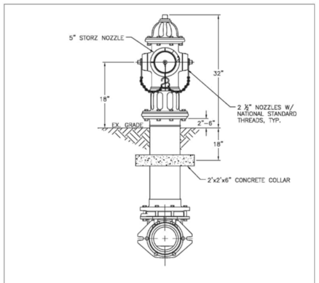

NOTES:
1. ALL PUBLIC FIRE HYDRANTS IN THE CITY OF RALEIGH AND THE MERGER TOWNS OF GARNER, ROLESVILLE, WAKE FOREST, KNIGHTDALE, WENDELL AND ZEBULON SHALL BE PAINTED CHROME YELLOW WITH HIGH REFLECTIVE ALUMINUM SILVER CAPS, BONNETS AND OPERATING NUTS.
2. ALL PRIVATE FIRE HYDRANTS SHALL BE RED.

CITY OF RALEIGH
STANDARD DETAIL
REVISIONS | DATE: 01/18/2025 | NOT TO SCALE
STANDARD FIRE HYDRANT WITH 5" STORZ PUMPER NOZZLE
W-5

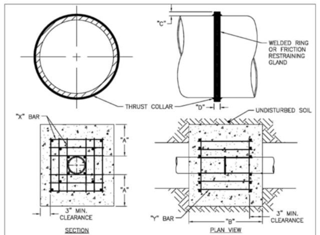

REINFORCING REQUIREMENTS

I.D. PIPE	REBAR SIZE	"X" BAR LENGTH	"X" BAR WEIGHT	"Y" BAR LENGTH	"Y" BAR WEIGHT	NO. REQUIRED
6"–36"	#5	2'–2"+ O.D. PIPE	1.043 LBS/FT	1'–1"	1.1 LBS. EACH	X–24 Y–12
≥48"	#6	3'–0"+ O.D. PIPE	1.502 LBS/FT	1'–3"	1.9 LBS. EACH	X–24 Y–12

THRUST COLLAR AND THRUST SCHEDULE

I.D. PIPE	"A"	"B"	"C"	"D"
6"–16"	1'–4"	1'–7"	2"	⅜"
20"–24"	1'–4"	1'–7"	3"	½"
30"–36"	1'–4"	1'–7"	4"	⅝"
≥48"	1'–8"	1'–9"	6"	⅞"

NOTES:
1. SEE DETAIL W–9 FOR THRUST BLOCK LOCATIONS.
2. CONCRETE SHALL BE 3,000 PSI AND TRANSIT MIXED.
3. REINFORCING BARS SHALL BE DEFORMED AND TIED TOGETHER.
4. TRENCH BOTTOM WIDTH IN VICINITY OF THRUST BLOCK INSTALLATION SHALL BE THE MINIMUM WIDTH AS SHOWN ON DETAIL W–3.
5. BACKFILL TAMPED IN 6" LIFTS, SEE DETAIL W–3.
6. THRUST COLLAR MUST BE FACTORY WELDED ON BOTH SIDES ALONG BOTH EDGES OF COLLAR AROUND CIRCUMFERENCE.

CITY OF RALEIGH
STANDARD DETAIL
REVISIONS | DATE: 01/18/2025 | NOT TO SCALE
THRUST BLOCKING DESIGN DATA FOR WATER MAINS
W-7

REACTION BEARING AREAS FOR HORIZONTAL WATER PIPE BENDS BASED ON TEST PRESSURE OF 200 PSI
ALL AREAS GIVEN IN SQUARE FEET

SIZE OF BEND	DEGREE OF BEND	STATIC THRUST IN POUNDS	MODERATELY DRY CLAY 4,000 LBS/FT²	SOFT CLAY 2,000 LBS/FT²	1,600 LBS/FT² GRAVEL/ COARSE SAND	8,000 LBS/FT² DRY CLAY (ALWAYS DRY)	SAND, COMPACT FIRM 8,000 LBS/FT²	SAND–CLEAN DRY 4,000 LBS/FT²	SOIL 1,000 LBS/FT² QUICKSAND (VERY POOR)	ROCK–POOR 10,000 LBS/FT²
6"	11 ¼˚	1,108	1	1	1	1	1	1	2	1
	22 ½˚	2,207	1	2	2	1	1	1	3	1
	45˚	4,328	2	3	3	1	1	2	5	1
	90˚	7,996	2	4	5	1	1	2	8	1
	PLUG	5,655	2	3	4	1	1	2	6	1
8"	11 ¼˚	1,970	1	1	2	1	1	1	2	1
	22 ½˚	3,922	1	2	3	1	1	1	4	1
	45˚	7,694	2	4	5	1	1	2	8	1
	90˚	14,215	4	8	9	2	2	4	15	2
	PLUG	10,053	3	5	6	2	2	3	10	1
12"	11 ¼˚	4,433	2	3	3	1	1	2	5	1
	22 ½˚	8,826	3	5	6	2	2	3	9	1
	45˚	17,312	5	9	11	3	3	5	18	2
	90˚	31,983	8	16	19	4	4	8	32	4
	PLUG	22,619	6	12	14	3	3	6	23	3
16"	11 ¼˚	7,881	2	4	5	1	1	2	8	1
	22 ½˚	15,691	4	8	10	2	2	4	16	2
	45˚	30,779	8	16	19	4	4	8	31	4
	90˚	56,861	15	29	35	8	8	15	57	6
	PLUG	40,213	10	21	25	5	5	10	41	5

NOTES:
1. REACTION BEARING AREAS ARE IN SQUARE FEET MEASURED IN A VERTICAL PLANE IN THE TRENCH SIDE AT AN ANGLE OF 90˚ TO THE THRUST VECTOR.
2. USE 6" 90˚ BEND VALUE FOR HYDRANTS FOR ADDITIONAL SAFETY FACTOR.

CITY OF RALEIGH
STANDARD DETAIL
REVISIONS | DATE: 01/18/2025 | NOT TO SCALE
THRUST BLOCKING DESIGN QUANTITY TABLE
W-10

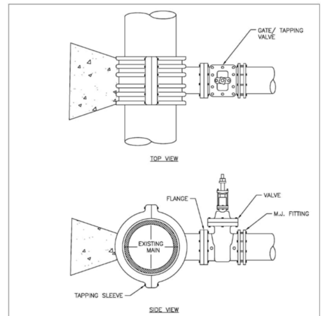

NOTES:
1. CONCRETE SHALL NOT CONTACT BOLTS OR ENDS OF MECHANICAL JOINT FITTINGS.
2. SEE DETAIL W–10 & W–11 (REACTION BLOCK TABLES) FOR AREA OF CONCRETE REQUIRED.
3. 3,000 PSI SOLID CONCRETE SHALL BE USED AS FOOTING FOR DUCTILE IRON PIPE.
4. FULL CIRCUMFERENCE SLEEVE, STAINLESS STEEL MATERIAL REQUIRED.

CITY OF RALEIGH
STANDARD DETAIL
REVISIONS | DATE: 01/18/2025 | NOT TO SCALE
4"–24" STANDARD TAPPING SLEEVE AND VALVE ASSEMBLY
W-14

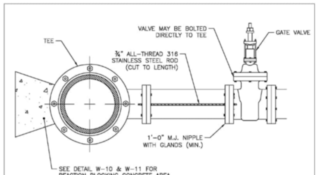

ROD REQUIREMENTS

BRANCH SIZE	NO. OF RODS
4"	2
6"	2
8"	4
12"	4
16"	6
24"	6
30"	8
36"	8

NOTES:
1. STEEL RODS AND BOLTS SHALL BE ¾" 316 STAINLESS STEEL.
2. SEE DETAIL W–10 AND W–11 (THRUST BLOCK TABLES) FOR CONCRETE.
3. CONCRETE SHALL NOT CONTACT BOLTS OR ENDS OF MECHANICAL FITTINGS.
4. THIS RODDING REQUIREMENT DOES NOT APPLY TO FIRE HYDRANTS.

CITY OF RALEIGH
STANDARD DETAIL
REVISIONS | DATE: 01/18/2025 | NOT TO SCALE
VALVE RESTRAINT AT TEES AND CROSSES FOR LINES (4"–24")
W-15

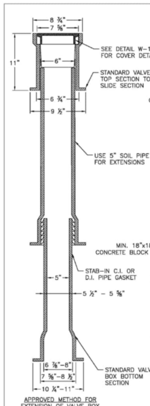

APPROVED METHOD FOR EXTENSION OF VALVE BOX

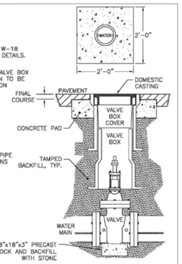

NOTES:
1. VALVE BOX NOT TO CONTACT WATER MAIN
2. ALL TRAFFIC CASTINGS MUST BE CLASS 35 OR GREATER.
3. FOR ALL VALVES OVER 10' DEEP, A VALVE STEM EXTENSION MUST BE USED TO BRING TO A DEPTH OF NO MORE THAN 5', EXTENSION MUST BE A MINIMUM OF 1" SOLID STOCK.
4. TOTAL VALVE BOX WEIGHT: MINIMUM OF 85 LBS.
5. 2'x2'x6" CONCRETE PAD REQUIRED ON ALL VALVES. NO PRECAST CONCRETE DOUGHNUT ALLOWED.

CITY OF RALEIGH
STANDARD DETAIL
REVISIONS | DATE: 01/18/2025 | NOT TO SCALE
VALVE BOX INSTALLATION AND EXTENSION
W-17

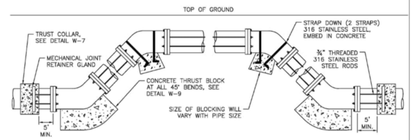

ROD REQUIREMENTS

SIZE OF 45˚ BEND	STATIC TRUST IN POUNDS	NO. OF RODS REQUIRED
6"	4,328	2
8"	7,694	4
12"	17,312	4
16"	30,779	8
24"	69,252	8

STRAP REQUIREMENTS

STRAP WIDTH	STRAP THICKNESS
1"	³⁄₁₆"
1.5"	³⁄₁₆"
2"	¼"
2"	½"
4"	½"

RESTRAINT REQUIREMENTS

PIPE DIA	RODDING	RJ GLANDS	THRUST COLLAR	THRUST BLOCKING
<12"	X	X	X	
≥12"	X	X	X	X

"X" DENOTES REQUIRED RESTRAINT.

NOTES:
1. STEEL RODS AND BOLTS SHALL BE ¾" 316 STAINLESS STEEL.
2. CONCRETE SHALL NOT CONTACT BOLTS OR ENDS OF MECHANICAL JOINT BENDS.
3. RESTRAINED MECHANICAL GLANDS TO BE USED AT ALL FITTINGS.
4. MUST USE DUCTILE IRON EYE BOLTS WHERE NECESSARY.
5. 3' MINIMUM COVER MUST BE MAINTAINED.
6. EXTERNAL RESTRAINT REQUIRED. INTEGRAL BELL RESTRAINT REQUIRES DIRECTOR'S APPROVAL.

CITY OF RALEIGH
STANDARD DETAIL
REVISIONS | DATE: 01/18/2025 | NOT TO SCALE
STANDARD VERTICAL BEND
W-12

MAIN SIZE / END PIPE SIZE

MAIN SIZE	END PIPE SIZE
6"–12"	6" MIN.
≥16"	APPROVED BY RALEIGH WATER

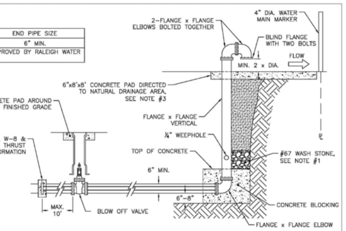

NOTES:
1. DRILL ¼" WEEP HOLE FOR STACK DRAINAGE INTO STONE.
2. DOUBLE ¾" BRIDLE RODS ON BOTH SIDES.
3. A RIP–RAP SWALE FROM FROM CONCRETE SPLASH PAD TO POSITIVE DRAINAGE AREA IS REQUIRED.
4. BOTTOM 90˚ ELBOW SHALL HAVE BLIND FLANGE ATTACHED WITH TWO BOLTS.
5. INSTALL WATER MAIN MARKER AT R/W OR P/L TO LOCATE MAIN.
6. BURIED ¾" RODS AND BOLTS TO BE 316 STAINLESS STEEL.
7. END PIPE SIZE 6" MIN. OR AS APPROVED BY PUBLIC UTILITIES.

CITY OF RALEIGH
STANDARD DETAIL
REVISIONS | DATE: 01/18/2025 | NOT TO SCALE
PERMANENT WATER MAIN BLOW OFF ASSEMBLY
W-22

NOTES:
1. CONCRETE SHALL BE 3,000 PSI.
2. CONCRETE SHALL NOT CONTACT BOLTS OR ENDS OF MECHANICAL JOINT FITTINGS.
3. TRENCHES SHALL CONFORM TO DETAIL W–3.
4. SEE DETAIL W–10 & W–11 (THRUST BLOCK TABLES) FOR AREA OF CONCRETE REQUIRED.
5. ALL BENDS AND INTERSECTIONS SHALL HAVE CONCRETE THRUST BLOCKING.

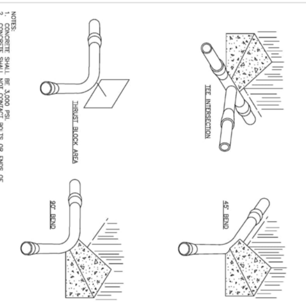

CITY OF RALEIGH
STANDARD DETAIL
REVISIONS | DATE: 01/18/2025 | NOT TO SCALE
THRUST BLOCKING VIEWS
W-9

PRELIMINARY DRAWING - NOT RELEASED FOR CONSTRUCTION

McADAMS
The John R. McAdams Company, Inc.
One Glenwood Avenue
Suite 201
Raleigh, NC 27603
phone 919. 823. 4300
fax 919. 361. 2269
license number: C-0293, C-187
www.mcadamsco.com

CLIENT

DORAN COMPANIES
7803 GLENROY ROAD, SUITE 200
BLOOMINGTON, MINNESOTA, 55439-3126
PHONE: 952. 288. 2051

DORAN

BLUEJACK FALLS -9 ACRE TRACT
PRELIMINARY SUBDIVISION PLAN
2537 WALL STORE ROAD
RALEIGH, NORTH CAROLINA, 27610

[redacted]

REVISIONS

NO.	DATE	
2	01. 05. 2024	PER COR COMMENTS
3	03. 15. 2024	PER COR COMMENTS
4	05. 07. 2024	PER COR COMMENTS
5	06. 27. 2024	PER COR COMMENTS
6	02. 14. 2025	REV. P/L FOR 35' B2 PROTECTIVE YARD
7	05. 20. 2025	PER COR COMMENTS
8	08. 08. 2025	PER COR COMMENTS

PLAN INFORMATION

PROJECT NO.	2021110767
FILENAME	2021110767-PSP-D1
CHECKED BY	NDW
DRAWN BY	KWH
SCALE	N.T.S.
DATE	08. 04. 2023

SHEET

WATER DETAILS
C8.03

X:\Projects\DRN\2021110767\04-Production\Engineering\Site Plan - Construction Drawings\Current Drawings\9-Acre Tract\2021110767-PSP-D1.dwg, 8/12/2025 10:08:03 AM, Kevin Hughes

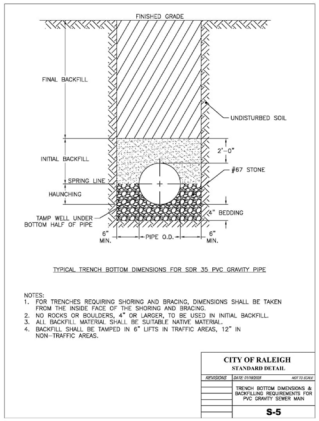

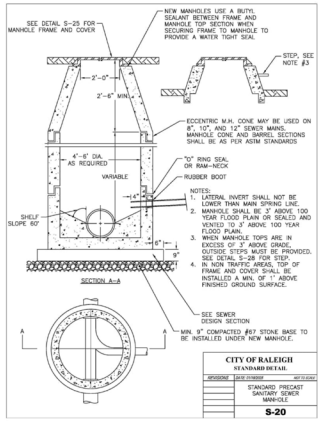

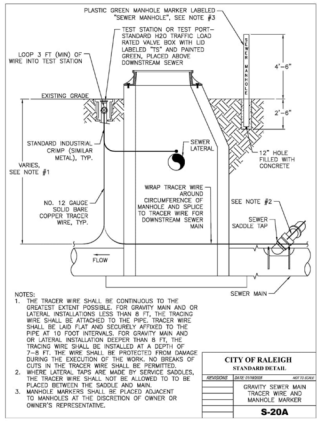

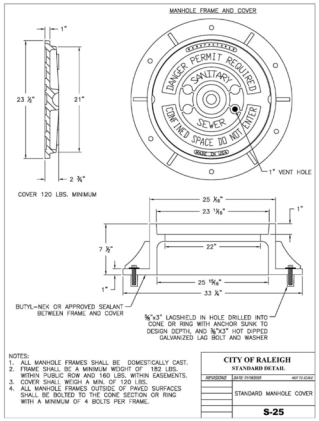

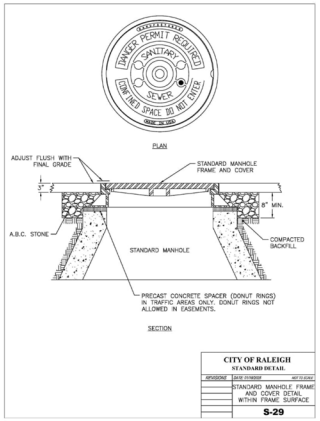

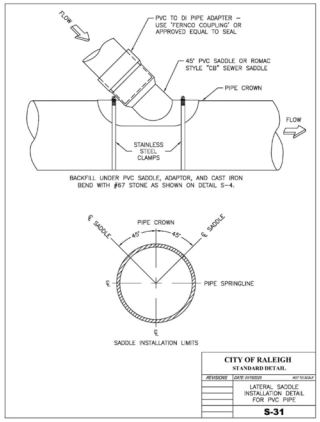

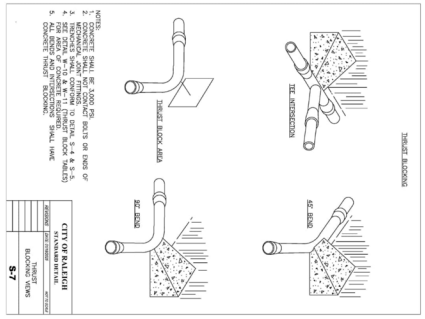

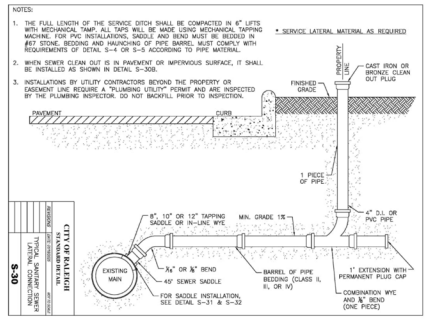

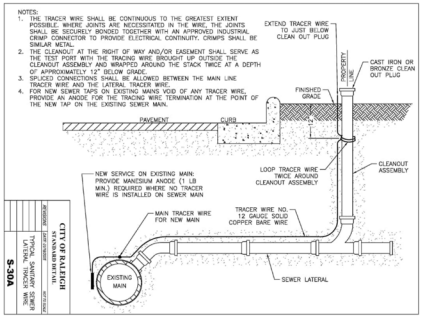

McADAMS
The John R. McAdams Company, Inc.
One Glenwood Avenue
Suite 201
Raleigh, NC 27603
phone 919. 823. 4300
fax 919. 361. 2269
license number: C-0293, C-187
www.mcadamsco.com

CLIENT

DORAN COMPANIES
7803 GLENROY ROAD, SUITE 200
BLOOMINGTON, MINNESOTA, 55439-3126
PHONE: 952. 288. 2051

DORAN

BLUEJACK FALLS -9 ACRE TRACT
PRELIMINARY SUBDIVISION PLAN
2537 WALL STORE ROAD
RALEIGH, NORTH CAROLINA, 27610

[redacted]

REVISIONS

NO.	DATE	
2	01. 05. 2024	PER COR COMMENTS
3	03. 15. 2024	PER COR COMMENTS
4	05. 07. 2024	PER COR COMMENTS
5	06. 27. 2024	PER COR COMMENTS
6	02. 14. 2025	REV. P/L FOR 35' B2 PROTECTIVE YARD
7	05. 20. 2025	PER COR COMMENTS
8	08. 08. 2025	PER COR COMMENTS

PLAN INFORMATION

PROJECT NO.	2021110767
FILENAME	2021110767-PSP-D1
CHECKED BY	NDW
DRAWN BY	KWH
SCALE	N.T.S.
DATE	08. 04. 2023

SHEET

SANITARY SEWER DETAILS

C8.04

PRELIMINARY DRAWING - NOT RELEASED FOR CONSTRUCTION

U:\Projects\DRN\2021110767\04-Production\Engineering\Site Plan - Construction Drawing\Current Drawings\9-Acre Tract\2021110767-PSP-D1.dwg, 8/12/2025 10:08:05 AM, Kevin Hughes

TREE CONSERVATION AREA CALCULATIONS

GROSS SITE AREA: 8.09 ACRES (352,400 SF)
RIGHT OF WAY DEDICATION: 1.26 ACRES (54,993 SF)
NET SITE AREA: 6.83 ACRES (297,407 SF)

TCA REQUIRED: 0.68 ACRES (10% OF NET SITE AREA)
TCA PROVIDED: 0.33 ACRES (14,474 SF) PRIMARY TCA
0.42 ACRES (18,319 SF) SECONDARY TCA

0.75 ACRES (32,793 SF) (11% OF NET SITE AREA)

SITE LEGEND

- SIGNAGE
- YARD LIGHTS
- LIGHT POLE
- POWER POLE
- TRAFFIC DIRECTIONAL ARROW
- ACC — ACCESSIBLE PARKING STALL
- VAN — VAN ACCESSIBLE PARKING STALL
- XX — PARKING SPACE COUNT
- TYPE A, TYPE B, TYPE C — ACCESSIBLE RAMPS
- ACCESSIBLE ROUTE
- PHASE LINE
- PROPERTY LINE
- RIGHT-OF-WAY LINE
- LOT LINE
- EASEMENT LINE
- CENTERLINE
- OS — OPEN SPACE
- HEAVY DUTY ASPHALT PAVEMENT
- TS — TREE CONSERVATION AREA
- TS — TREE PROTECTION AREA

SEE SHEET C0.00 FOR ALL PROJECT, SITE, GRADING, STORM DRAINAGE AND UTILITY NOTES

ALL CONSTRUCTION SHALL BE IN ACCORDANCE WITH THE CURRENT CITY OF RALEIGH AND NCDOT (WHERE APPLICABLE) ENGINEERING DESIGN AND CONSTRUCTION STANDARDS

N
NC GRID (NAD83)
GRAPHIC SCALE
0 20 40 80
1 inch = 40 ft.

PRELIMINARY DRAWING - NOT RELEASED FOR CONSTRUCTION

McADAMS
The John R. McAdams Company, Inc.
One Glenwood Avenue
Suite 201
Raleigh, NC 27603
phone 919. 823. 4300
fax 919. 361. 2269
license number: C-0293, C-187
www.mcadamsco.com

CLIENT

DORAN COMPANIES
7803 GLENROY ROAD, SUITE 200
BLOOMINGTON, MINNESOTA, 55439-3126
PHONE: 952. 288. 2051

DORAN

BLUEJACK FALLS -9 ACRE TRACT
PRELIMINARY SUBDIVISION PLAN
2537 WALL STORE ROAD
RALEIGH, NORTH CAROLINA, 27610

[redacted]

REVISIONS

NO.	DATE	
2	01. 05. 2024	PER COR COMMENTS
3	03. 15. 2024	PER COR COMMENTS
4	05. 07. 2024	PER COR COMMENTS
5	06. 27. 2024	PER COR COMMENTS
6	02. 14. 2025	REV. P/L FOR 35' B2 PROTECTIVE YARD
7	05. 20. 2025	PER COR COMMENTS
8	08. 08. 2025	PER COR COMMENTS

PLAN INFORMATION

PROJECT NO.	2021110767
FILENAME	2021110767-PSP-LS1
CHECKED BY	NDW
DRAWN BY	KWH
SCALE	1" = 40'
DATE	08. 04. 2023

SHEET

TREE CONSERVATION PLAN

L5.00

U:\Projects\2021\2021110767\04-Production\Engineering\Site Plan - Construction Drawings\Current Drawings\Tree Plan\2021110767-PSP-LS1.dwg, 8/12/2025 10:08:31 AM, Kevin Hughes

PLANT SCHEDULE

SYMBOL	CODE	QTY	BOTANICAL / COMMON NAME	CAL	HEIGHT	REMARKS
TREES						
	ABG	8	ACER BUERGERIANUM TRIDENT MAPLE	3" MIN	10' MIN	
	ILOS	7	ILEX OPACA 'SATYR HILL' SATYR HILL AMERICAN HOLLY	-	8' MIN	
	PITA	7	PINUS TAEDA LOBLOLLY PINE	-	12' MIN	
	QCS	4	QUERCUS COCCINEA SCARLET OAK	3" MIN	10' MIN	
	QUS	19	QUERCUS SHUMARDII SHUMARD RED OAK	3" MIN	10' MIN	
	ZSV	8	ZELKOVA SERRATA 'VILLAGE GREEN' SAWLEAF ZELKOVA	3" MIN	10' MIN	

SYMBOL	CODE	QTY	BOTANICAL / COMMON NAME	CONT	HEIGHT	REMARKS
SHRUBS						
	ICCS	41	ILEX CORNUTA 'CARISSA' CARISSA CHINESE HOLLY	-	24" MIN	
	ICRD	31	ILEX CORNUTA 'ROTUNDA' ROTUNDA DWARF CHINESE HOLLY	-	24" MIN	

LANDSCAPE CALCULATIONS:

STREET TREES

STREEN "N":
PERMITTED UNDER BLUEJACK FALLS SITE CURRENTLY UNDER REVIEW
(PSP-0080-2022)

WALL STORE ROAD:	453 LF
TREES REQUIRED (1/40LF):	11 TREES
TREES PROVIDED:	11
STREET "A" NORTH:	612 LF
TREES REQUIRED (1/40LF):	15 TREES
TREES PROVIDED:	15
STREET "A" SOUTH:	538 LF
TREES REQUIRED (1/40LF):	13 TREES
TREES PROVIDED:	13

35' TYPE B2 STREET PROTECTIVE YARD

PLANTS REQUIRED PER 100 LF:
- SHADE TREES: 6
- UNDERSTORY TREES: 6
- 3' HT. SHRUBS: 60

DISTURBED LENGTH OF YARD: 120.18 LF

PLANTS REQUIRED PER DISTURBED LENGTH:
- SHADE TREES: 7 (120.18 LF/100 x 6)
- UNDERSTORY TREES: 7 (120.18 LF/100 x 6)
- 3' HT. SHRUBS: 72 (120.18 LF/100 x 60)

PLANTS PROVIDED IN DISTURBED AREA:
- SHADE TREES: 7
- UNDERSTORY TREES: 7
- 3' HT. SHRUBS: 72

NOTE:
EXISTING TREES AND SHRUBS PRESERVED ADJACENT TO THE DISTURBED PORTIONS OF THE 35' TYPE B2 STREET PROTECTIVE YARD THAT MEET THE REQUIREMENTS OF RALEIGH UDO ARTICLE 7.2 MAY BE USED TO SATISFY THE LANDSCAPING REQUIREMENTS FOR THE YARD. CREDIT TOWARD THE REQUIRED NUMBER OF TREES OR SHRUBS WILL BE GIVEN ON A PLANT-FOR-PLANT BASIS FOR EACH PRESERVED TREE OR SHRUB. WHERE EXISTING NATIVE VEGETATION DOES NOT MEET THE REQUIRED LANDSCAPING STANDARDS, LANDSCAPING THAT MEETS THE REQUIREMENTS OF ARTICLE 7.2 MUST BE INSTALLED AS SHOWN.

SITE LEGEND

- SIGNAGE
- YARD LIGHTS
- LIGHT POLE
- POWER POLE
- TRAFFIC DIRECTIONAL ARROW
- ACC — ACCESSIBLE PARKING STALL
- VAN — VAN ACCESSIBLE PARKING STALL
- (XX) — PARKING SPACE COUNT
- TYPE (A) TYPE (B) TYPE (C) — ACCESSIBLE RAMPS
- ACCESSIBLE ROUTE
- PHASE LINE
- PROPERTY LINE
- RIGHT-OF-WAY LINE
- LOT LINE
- EASEMENT LINE
- CENTERLINE
- OS — OPEN SPACE
- HEAVY DUTY ASPHALT PAVEMENT
- TS — TREE CONSERVATION AREA
- TS — TREE PROTECTION AREA

SEE SHEET C0.00 FOR ALL PROJECT, SITE, GRADING, STORM DRAINAGE AND UTILITY NOTES

ALL CONSTRUCTION SHALL BE IN ACCORDANCE WITH THE CURRENT CITY OF RALEIGH AND NCDOT (WHERE APPLICABLE) ENGINEERING DESIGN AND CONSTRUCTION STANDARDS

NC GRID (NAD83)

GRAPHIC SCALE
0 20 40 80
1 inch = 40 ft.

PRELIMINARY DRAWING - NOT RELEASED FOR CONSTRUCTION

McADAMS
The John R. McAdams Company, Inc.
One Glenwood Avenue
Suite 201
Raleigh, NC 27603
phone 919. 823. 4300
fax 919. 361. 2269
license number: C-0293, C-187
www.mcadamsco.com

CLIENT

DORAN COMPANIES
7803 GLENROY ROAD, SUITE 200
BLOOMINGTON, MINNESOTA, 55439-3126
PHONE: 952. 288. 2051

DORAN

BLUEJACK FALLS -9 ACRE TRACT
PRELIMINARY SUBDIVISION PLAN
2537 WALL STORE ROAD
RALEIGH, NORTH CAROLINA, 27610

[redacted]

REVISIONS

NO.	DATE	
2	01. 05. 2024	PER COR COMMENTS
3	03. 15. 2024	PER COR COMMENTS
4	05. 07. 2024	PER COR COMMENTS
5	06. 27. 2024	PER COR COMMENTS
6	02. 14. 2025	REV. P/L FOR 35' B2 PROTECTIVE YARD
7	05. 20. 2025	PER COR COMMENTS
8	08. 08. 2025	PER COR COMMENTS

PLAN INFORMATION

PROJECT NO.	2021110767
FILENAME	2021110767-PSP-LS1
CHECKED BY	NDW
DRAWN BY	KWH
SCALE	1" = 40'
DATE	08. 04. 2023

SHEET

LANDSCAPE PLAN

L5.01

LANDSCAPE NOTES

1. ALL MATERIALS AND METHODS OF CONSTRUCTION SHALL BE IN ACCORDANCE WITH THE CITY OF RALEIGH AND THE STATE OF NORTH CAROLINA STANDARDS AND SPECIFICATIONS.
2. CONTRACTOR IS RESPONSIBLE FOR THE SITE INSPECTION BEFORE LANDSCAPE CONSTRUCTION AND INSTALLATION IN ORDER TO BECOME FAMILIAR WITH THE EXISTING CONDITIONS.
3. LANDSCAPE CONTRACTOR IS RESPONSIBLE FOR LOCATING ALL UNDERGROUND UTILITIES BEFORE BEGINNING DEMOLITION OR INSTALLATION.
4. CONTRACTOR SHALL NOTIFY LANDSCAPE ARCHITECT OF ANY DISCREPANCIES BETWEEN THE NOTES, SPECIFICATIONS, DRAWINGS OR SITE CONDITIONS FOR RESOLUTION PRIOR TO INSTALLATION.
5. ANY DAMAGE TO UTILITIES SHALL BE REPAIRED AT THE CONTRACTOR'S EXPENSE.
6. THIS PLAN IS FOR PLANTING PURPOSES ONLY. FOR INFORMATION REGARDING BUILDINGS, GRADING, WALLS, ETC., REFER TO ARCHITECTURE, SITE AND GRADING PLANS.
7. VERIFICATION OF TOTAL PLANT QUANTITIES AS SHOWN IN THE PLANT SCHEDULE SHALL BE THE RESPONSIBILITY OF THE LANDSCAPE CONTRACTOR. ANY DISCREPANCIES SHALL BE BROUGHT TO THE ATTENTION OF THE LANDSCAPE ARCHITECT.
8. CONTRACTOR TO ENSURE PROPER STABILIZATION AND SEEDING OF THE SITE IN ACCORDANCE WITH APPLICABLE REGULATIONS.
9. LANDSCAPE MATERIAL SHALL BE WELL FORMED, VIGOROUS, GROWING SPECIMENS WITH GROWTH TYPICAL OF VARIETIES SPECIFIED AND SHALL BE FREE FROM DAMAGE, INSECTS AND DISEASES. MATERIAL SHALL EQUAL OR SURPASS #1 QUALITY AS DEFINED IN THE CURRENT ISSUE OF "AMERICAN STANDARD FOR NURSERY STOCK" AS PUBLISHED BY THE AMERICAN NURSERY & LANDSCAPE ASSOCIATION.
10. ALL PLANT MATERIAL IS TO BE CAREFULLY HANDLED BY THE ROOT BALL, NOT THE TRUNK, BRANCHES AND/OR FOLIAGE OF THE PLANT. MISHANDLED PLANT MATERIAL MAY BE REJECTED BY THE LANDSCAPE ARCHITECT.
11. ALL PLANT MATERIAL IS TO BE WELL ROOTED, NOT ROOT BOUND, SUCH THAT THE ROOT BALL REMAINS INTACT THROUGHOUT THE PLANTING PROCESS. DEFICIENT PLANT MATERIAL MAY BE REJECTED BY THE LANDSCAPE ARCHITECT OR OWNER.
12. ALL PLANTS TO BE A MINIMUM OF WHAT IS SPECIFIED IN THE PLANT SCHEDULE. ANY CHANGES OR SUBSTITUTIONS SHALL BE APPROVED BY THE LANDSCAPE ARCHITECT AND GOVERNING JURSDICTION PRIOR TO ANY HOLE BEING DUG.
13. CONTRACTOR TO COORDINATE WITH OWNER'S REPRESENTATIVE AND LANDSCAPE ARCHITECT TO ESTABLISH THE EXTENTS OF MULCH/SEED/SOD IF NOT SPECIFICALLY SHOWN ON PLANS.
14. CONTRACTOR SHALL PROVIDE POSITIVE DRAINAGE IN ALL PLANTING AREAS.
15. PROPOSED TREES TO BE PLANTED A MINIMUM 10 FEET FROM ANY LIGHT POLE AS MEASURED FROM TRUNK OF THE TREE TO THE POLE.
16. PROPOSED TREES TO BE PLANTED A MINIMUM 5 FEET FROM ANY FIRE HYDRANT AS MEASURED FROM TRUNK OF THE TREE TO THE HYDRANT.
17. CONTRACTOR SHALL COMPLETE SOIL TEST IN ALL PLANTING AREAS TO DETERMINE SOIL AMENDMENT REQUIREMENTS UNLESS WAIVED BY OWNER'S REPRESENTATIVE. CONTRACTOR SHALL ADJUST PH AND FERTILITY BASED UPON THE SOIL TEST RESULTS.
18. TOPSOIL SHALL BE FREE OF MATERIAL LARGER THAN 1.0 INCH IN DIAMETER OR LENGTH AND SHALL NOT CONTAIN SLAG, CINDERS, STONES, LUMPS OF SOIL, STICKS, ROOTS, TRASH, OR OTHER EXTRANEOUS MATERIAL.
19. LOOSEN SUBGRADE / SURFACE SOIL TO A MINIMUM DEPTH OF 6 INCHES. APPLY SOIL AMENDMENTS AND FERTILIZERS AS REQUIRED BY THE SOIL TEST RESULTS TO ACHIEVE A HEALTHY GROWING MEDIA AND MIX THOROUGHLY INTO TOP 4 INCHES OF SOIL. SPREAD PLANTING SOIL MIX TO A DEPTH OF 6 INCHES BUT NOT LESS THAN REQUIRED TO MEET FINISH GRADES AFTER NATURAL SETTLEMENT. DO NOT SPREAD IF PLANTING SOIL OR SUBGRADE IS FROZEN, MUDDY, OR EXCESSIVELY WET.
20. IF IMPORTED TOPSOIL IS REQUIRED, THE SUBGRADE SHALL BE SCARIFIED OR TILLED TO A DEPTH OF AT LEAST 6 INCHES PRIOR TO INSTALLATION OF IMPORTED TOPSOIL. FOLLOWING INSTALLATION OF IMPORTED TOPSOIL, THE TOPSOIL SHALL BE TILLED TO INTEGRATE THE SOIL PROFILES.
21. PLANT MATERIALS ARE TO BE GUARANTEED FOR A PERIOD OF 12 MONTHS. PLANT MATERIALS WHICH REMAIN UNHEALTHY WILL BE REPLACED BY THE LANDSCAPE CONTRACTOR BEFORE THE EXPIRATION OF THE GUARANTEE PERIOD OR IMMEDIATELY IF SO DIRECTED BY THE OWNER'S REPRESENTATIVE OR LANDSCAPE ARCHITECT.
22. ALL TREE PLANTINGS SHALL BE MULCHED TO A DEPTH OF 3 INCHES, AND WITH A MINIMUM 3 FOOT RADIUS FROM BASE OF TREE OR TO DRIPLINE. MULCH SHALL BE FREE OF TRASH AND MAINTAINED WEED FREE. MULCH SHALL NOT COVER THE ROOT FLARE. CONFIRM MULCH SPECIFICATIONS WITH OWNER'S REPRESENTATIVE OR LANDSCAPE ARCHITECT.
23. DO NOT PRUNE TREES AND SHRUBS BEFORE DELIVERY. PROTECT BARK, BRANCHES, AND ROOT SYSTEMS FROM SUN SCALD, DRYING, SWEATING, WHIPPING, AND OTHER HANDLING AND TYING DAMAGE. DO NOT BEND OR BIND-TIE TREES OR SHRUBS IN SUCH A MANNER AS TO DESTROY THEIR NATURAL SHAPE. PROVIDE PROTECTIVE COVERING OF EXTERIOR PLANTS DURING DELIVERY. DO NOT DROP EXTERIOR PLANTS DURING DELIVERY AND HANDLING.
24. DELIVER EXTERIOR PLANTS AFTER PREPARATIONS FOR PLANTING HAVE BEEN COMPLETED AND INSTALL IMMEDIATELY. IMMEDIATELY AFTER UNLOADING, STAND THE TREES UP TO REDUCE THE RISK OF SUN SCALD. PROPERLY STAGED TREES ARE STANDING, UNTIED AND SPACED. UNLESS IMMEDIATELY INSTALLED, SET EXTERIOR PLANTS AND TREES IN SHADE, PROTECT FROM WEATHER AND MECHANICAL DAMAGE, AND KEEP ROOTS MOIST.
25. SEE LANDSCAPE DETAILS FOR TREE STAKING REQUIREMENTS.
26. CONTRACTOR SHALL REMOVE DEBRIS AND FINE GRADE ALL PLANTING AREAS PRIOR TO INSTALLATION.
27. REMOVE GUY WIRES AND STAKES AT END OF WARRANTY PERIOD OR ESTABUSHMENT.
28. FINISH GRADING: GRADE PLANTING AREAS TO A SMOOTH, UNIFORM SURFACE PLANE WITH LOOSE, UNIFORMLY FINE TEXTURE. GRADE TO WITHIN PLUS OR MINUS 1/2 INCH OF FINISH ELEVATION. ROLL AND RAKE, REMOVE RIDGES, AND FILL DEPRESSIONS TO MEET FINISH GRADES. LIMIT FINISHED GRADING TO AREAS THAT CAN BE PLANTED IN THE IMMEDIATE FUTURE.
29. ALL TREES LOCATED WITHIN SIGHT DISTANCE TRIANGLES SHALL BE LIMBED UP TO A HEIGHT OF 8 FEET. HIGHER CALIPER AT INSTALLATION MAY BE NECESSARY.

NOTES

1. MEDIUM, DECIDUOUS SHADE TREES ARE SHOWN IN FRONT OF TOWNHOME LOTS DUE TO LIMITED PLANTING SPACE, UTILITY CONFLICT MINIMIZATION, AND PROXIMITY TO DRIVEWAYS. LARGE, MATURING DECIDUOUS STREET TREES ARE SHOWN IN AREAS WHERE LIMITATIONS DO NOT EXIST.
2. STREET TREES SHALL BE INSTALLED AND MAINTAINED IN ACCORDANCE WITH THE REQUIREMENTS OF CHAPTER 2 OF THE CITY TREE MANUAL.
3. STREET TREES BETWEEN DRIVEWAYS IN FRONT OF TOWNHOMES SHALL HAVE A MINIMUM OF 600 CUBIC FEET OF SOIL VOLUME AS DESCRIBED IN CHAPTER 2 OF THE CITY TREE MANUAL. SEE CITY OF RALEIGH DETAIL TPP-07. THIS SHEET FOR THE REQUIRED UNDERGROUND ROOT CHANNELS. COORDINATE WITH UTILITY INSTALLATION AND CITY OF RALEIGH URBAN FORESTRY INSPECTIONS.
4. ALL MECHANICAL EQUIPMENT SHALL BE SCREENED. SEE LANDSCAPE DETAILS ON SHEET L5.03 FOR TYPICAL SCREENING REQUIREMENTS. ADDITIONAL PLANT MATERIAL WILL BE REQUIRED THAT IS NOT SHOWN ON THE PLANT SCHEDULE.
5. STREET TREES SHALL BE LOCATED NO CLOSER THAN 30' FROM STOP SIGNS, 10' ON EITHER SIDE OF UTILITY PIPES, 10' FROM DRIVEWAY, 10' FROM A FIRE HYDRANT AND 20' FROM ANY LIGHT POLES. SEE RALEIGH CITY TREE MANUAL FOR ADDITIONAL MINIMUM SEPARATIONS FROM SITE ELEMENTS TO STREET TREES.
6. CONTRACTOR SHALL REPLACE ANY EXISTING STREET TREE WHICH IS DAMAGED OR DESTROYED DURING CONSTRUCTION WITH AN EQUAL SPECIES AND SIZE TO BE APPROVED BY LANDSCAPE ARCHITECT AND/OR GOVERNING AGENCY.
7. ALL EXISTING STREET TREES AND THEIR CRITICAL ROOT ZONES SHALL BE PROTECTED TO THE MAXIMUM EXTENT POSSIBLE THROUGHOUT CONSTRUCTION.
8. ALL TREES LOCATED WITHIN SIGHT DISTANCE TRIANGLES SHALL BE LIMBED UP TO A MINIMUM 8' ABOVE FINISHED GRADE.
9. A TREE IMPACT PERMIT IS REQUIRED FOR TREES INSTALLED WITHIN THE PUBLIC RIGHTS-OF-WAY AND WILL BE ISSUED WITH BUILDING PERMITS.

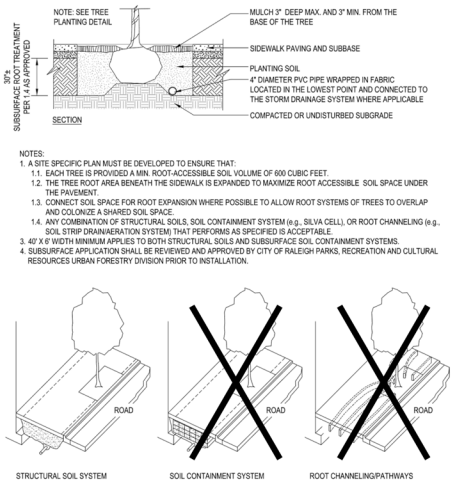

NOTES:
1. A SITE SPECIFIC PLAN MUST BE DEVELOPED TO ENSURE THAT:
   1.1. EACH TREE IS PROVIDED A MIN. ROOT-ACCESSIBLE SOIL VOLUME OF 600 CUBIC FEET.
   1.2. THE TREE ROOT AREA BENEATH THE SIDEWALK IS EXPANDED TO MAXIMIZE ROOT ACCESSIBLE SOIL SPACE UNDER THE PAVEMENT.
   1.3. CONNECT SOIL SPACE FOR ROOT EXPANSION WHERE POSSIBLE TO ALLOW ROOT SYSTEMS OF TREES TO OVERLAP AND COLONIZE A SHARED SOIL SPACE.
   1.4. ANY COMBINATION OF STRUCTURAL SOILS, SOIL CONTAINMENT SYSTEM (e.g., SILVA CELL), OR ROOT CHANNELING (e.g., SOIL STRIP DRAIN/AERATION SYSTEM) THAT PERFORMS AS SPECIFIED IS ACCEPTABLE.
3. 40' X 6' WIDTH MINIMUM APPLIES TO BOTH STRUCTURAL SOILS AND SUBSURFACE SOIL CONTAINMENT SYSTEMS.
4. SUBSURFACE APPLICATION SHALL BE REVIEWED AND APPROVED BY CITY OF RALEIGH PARKS, RECREATION AND CULTURAL RESOURCES URBAN FORESTRY DIVISION PRIOR TO INSTALLATION.

CONTACT INFORMATION:
CITY OF RALEIGH PARKS, RECREATION AND CULTURAL RESOURCES DEPARTMENT
URBAN FORESTER: TREES@RALEIGHNC.GOV
WWW.RALEIGHNC.GOV

CITY OF RALEIGH
STANDARD DETAIL

REVISIONS	DATE: 8/2021	NOT TO SCALE
	TREE PLANTING IN SIDEWALK WITHIN ROW	
		TPP-07

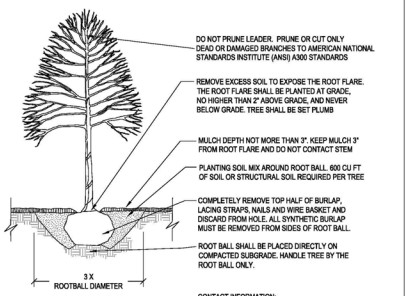

CONTACT INFORMATION:
CITY OF RALEIGH PARKS, RECREATION AND CULTURAL RESOURCES DEPARTMENT URBAN FORESTER:
TREES@RALEIGHNC.GOV
WWW.RALEIGHNC.GOV

NOTES:
1. TREES MUST MEET THE TREE QUALITY STANDARDS IN CH. 2 OF THE CITY TREE MANUAL.
2. CONTRACTOR IS RESPONSIBLE FOR ADEQUATE DRAINAGE OF ALL PLANTING PITS. (POSITIVE DRAINAGE AWAY FROM PIT)
3. TREES SHALL BE PLANTED BETWEEN OCTOBER 1ST AND APRIL 30TH.
4. A TREE IMPACT PERMIT IS REQUIRED.
5. ELECTRICAL OUTLETS AND OTHER UTILITIES ARE PROHIBITED IN THE PLANTING AREA IMMEDIATELY SURROUNDING THE TREE.
6. IF STAKING IN ACCORDANCE WITH THE CITY TREE MANUAL, THE STAKING MUST BE REMOVED WITHIN ONE YEAR.
7. TREES WILL HAVE A MINIMUM 1 YEAR WARRANTY AFTER THE INITIAL PLANTING IS APPROVED BY THE CITY.

CITY OF RALEIGH
STANDARD DETAIL

REVISIONS	DATE: 8/2020	NOT TO SCALE
10/2019	TREE PLANTING DETAIL	
		TPP-03

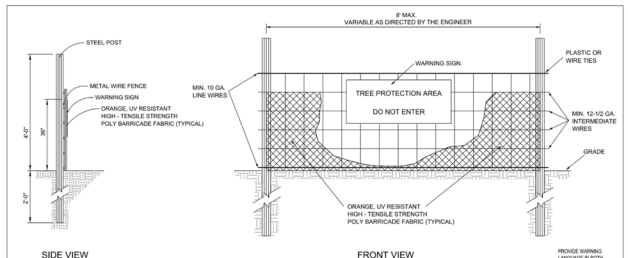

NOTE: FOR TREE PROTECTION ONLY

WARNING SIGN DETAIL

NOTES:
1. TREE PROTECTION FENCING MUST BE INSTALLED AT A MINIMUM RADIUS OF THE CRITICAL ROOT ZONE (SEE DETAIL TPP-02 FOR EXAMPLES)
2. THE TREE PROTECTION FENCING MUST REMAIN IN PLACE FOR THE DURATION OF THE PROJECT UNLESS OTHERWISE APPROVED BY URBAN FORESTRY STAFF.
3. APPROVED IMPACT PROTECTION DEVICES MUST BE REMOVED AFTER CONSTRUCTION WHEN APPLICABLE.
4. SIGNS SHALL BE PLACED AT 50' MAXIMUM INTERVALS. PLACE A SIGN AT EACH END OF LINEAR TREE PROTECTION AND 50' ON CENTER FOR THE REMAINDER
5. FOR TREE PROTECTION AREAS LESS THAN 200' IN PERIMETER, PROVIDE NO LESS THAN ONE SIGN PER PROTECTED AREA.
6. ATTACH SIGNS SECURELY TO FENCE POSTS AND FABRIC.
7. ADDITIONAL SIGNS MAY BE REQUIRED BY CITY OF RALEIGH BASED ON ACTUAL FIELD CONDITIONS.
8. SIGNS ARE TO BE MADE OF DURABLE, WEATHERPROOF MATERIAL WITH LETTERS A MINIMUM OF 2 1/2" HIGH. CLEARLY LEGIBLE AND SPACED AS SHOWN.

CONTACT INFORMATION:
CITY OF RALEIGH PARKS, RECREATION AND CULTURAL RESOURCES DEPARTMENT
URBAN FORESTER:
TREES@RALEIGHNC.GOV
WWW.RALEIGHNC.GOV

CITY OF RALEIGH
STANDARD DETAIL

REVISIONS	DATE: 8/2020	NOT TO SCALE
	STANDARD TREE PROTECTION DETAIL	
		TPP-01

SEE SHEET C0.00 FOR ALL PROJECT, SITE, GRADING, STORM DRAINAGE AND UTILITY NOTES

ALL CONSTRUCTION SHALL BE IN ACCORDANCE WITH THE CURRENT CITY OF RALEIGH AND NCDOT (WHERE APPLICABLE) ENGINEERING DESIGN AND CONSTRUCTION STANDARDS

PRELIMINARY DRAWING - NOT RELEASED FOR CONSTRUCTION

McADAMS
The John R. McAdams Company, Inc.
One Glenwood Avenue
Suite 201
Raleigh, NC 27603
phone 919. 823. 4300
fax 919. 361. 2269
license number: C-0293, C-187
www.mcadamsco.com

CLIENT

DORAN COMPANIES
7803 GLENROY ROAD, SUITE 200
BLOOMINGTON, MINNESOTA, 55439-3126
PHONE: 952. 288. 2051

DORAN

BLUEJACK FALLS -9 ACRE TRACT
PRELIMINARY SUBDIVISION PLAN
2537 WALL STORE ROAD
RALEIGH, NORTH CAROLINA, 27610

[redacted]

REVISIONS

NO.	DATE	
2	01. 05. 2024	PER COR COMMENTS
3	03. 15. 2024	PER COR COMMENTS
4	05. 07. 2024	PER COR COMMENTS
5	06. 27. 2024	PER COR COMMENTS
6	02. 14. 2025	REV. P/L FOR 35' B2 PROTECTIVE YARD
7	05. 20. 2025	PER COR COMMENTS
8	08. 08. 2025	PER COR COMMENTS

PLAN INFORMATION

PROJECT NO.	2021110767
FILENAME	2021110767-PSP-LS1
CHECKED BY	BAP
DRAWN BY	BAP
SCALE	AS SHOWN
DATE	08. 04. 2023

SHEET

LANDSCAPE NOTES + DETAILS

L5.02

U:\Projects\DRN\2021110767\04-Production\Engineering\Site Plan - Construction Drawing\Current Drawings\9-Acre Tract\2021110767-PSP-LS1.dwg, 8/12/2025 10:06:37 AM, Kevin Hughes