City of Raleigh

Standard Details

NORTH CAROLINA
PROFESSIONAL
SEAL
039727
ENGINEER
KENNETH W. RITCHIE

8/22/2023

Transportation

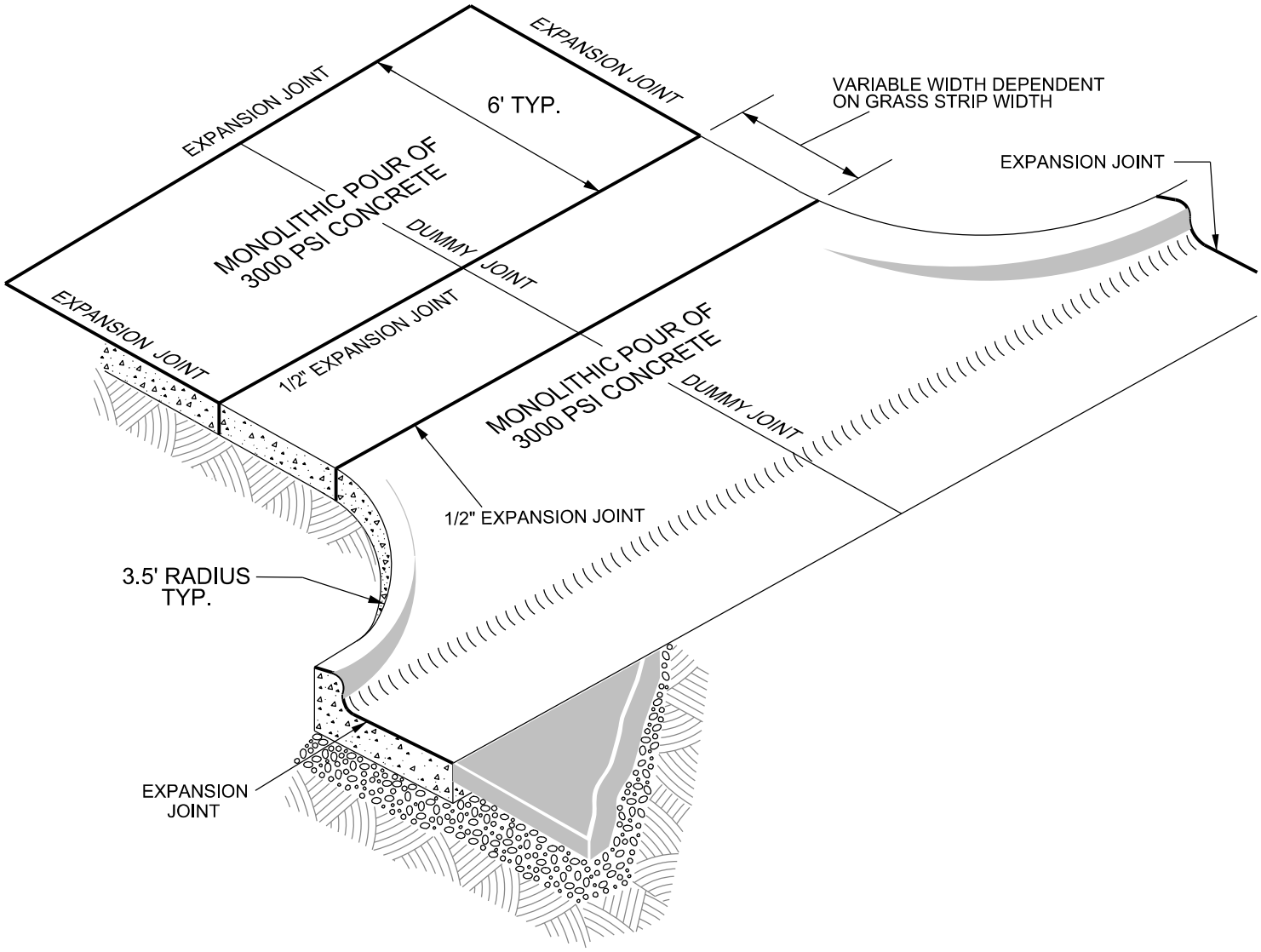

SEE T-10.01.2 FOR ADDITIONAL NOTES

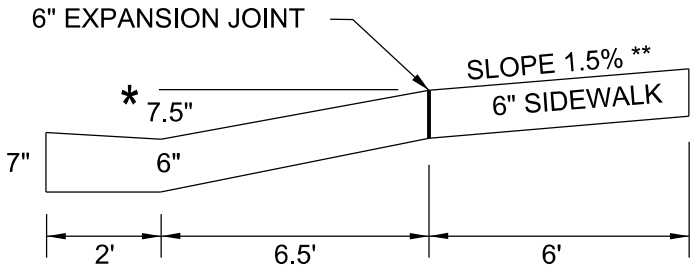

* USE 6.5" WHEN DRIVEWAY IS USED IN LIEU OF A WHEELCHAIR RAMP TO ACCOMMODATE 12:1 MAXIMUM SLOPE (ADA COMPLIANT), SUCH AS IN A CUL-DE SAC.

** 2.08% (1:48) max

SHEET 1 OF 4

CITY OF RALEIGH
STANDARD DETAIL

REVISIONS	DATE: 8/2020	NOT TO SCALE
DATE: 12/2022	DRIVEWAY AND SIDEWALK DETAIL	
	T-10.01.1	

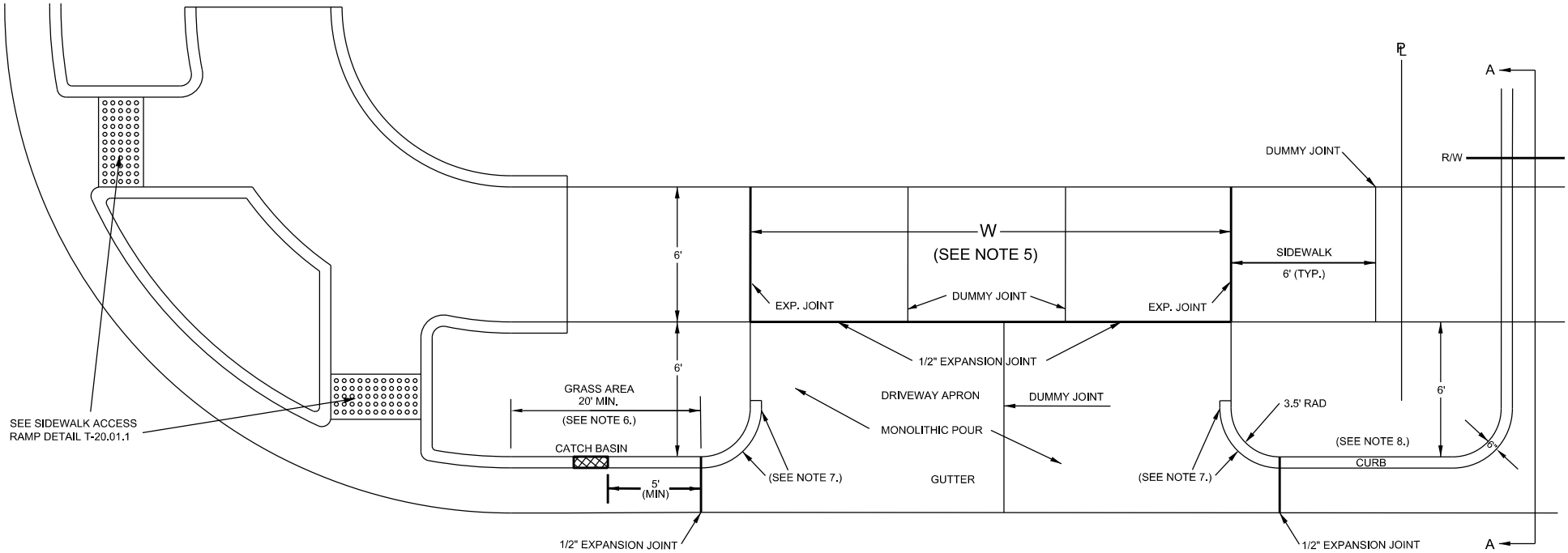

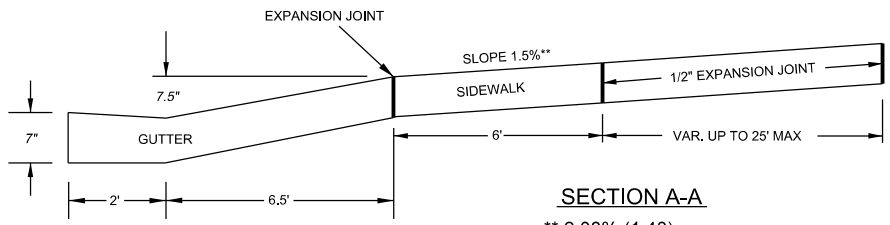

SECTION A-A

** 2.08% (1:48) max

NOTES:

1. WHEN A DRIVEWAY IS TO BE CONSTRUCTED WHERE FINAL LAYER OF ASPHALT HAS BEEN PLACED, THE CURB CAN BE SAW CUT IN A STRAIGHT LINE AND REMOVED. IF THE FINAL LAYER HAS NOT BEEN PLACED, THE ENTIRE CURB AND GUTTER SHALL BE REMOVED AND THE DRIVEWAY SHALL BE A MONOLITHIC POUR USING 3000 PSI ,MAX. 4" SLUMP CONCRETE.
2. EXPANSION MATERIAL SHALL EXTEND THE FULL DEPTH OF THE CONCRETE. 1/2" EXPANSION JOINTS ALONG SIDEWALK SHALL BE LOCATED AT NOT MORE THAN 40' INTERVALS & DUMMY CONSTRUCTION JOINTS AT 6' INTERVALS. DUMMY JOINTS SHALL BE AT LEAST 1/3 THE SLAB THICKNESS IN DEPTH.
3. SLOPE ON UNPAVED AREAS BETWEEN BACK OF CURB & SIDEWALK SHALL BE 1/4" PER FT.
4. NO EXPOSED AGGREGATE OR OTHER SPECIAL SURFACE TREATMENTS IN ROW.
5. W-DIMENSION AS SHOWN ON PLAN VIEW SHALL BE AS FOLLOWS: 10' MINIMUM, 18' MAXIMUM FOR RESIDENTIAL DRIVEWAYS 36' MAXIMUM FOR COMMERCIAL DRIVEWAYS
6. THE DISTANCE FROM THE END OF A STREET CURB RADIUS TO THE BEGINNING OF THE DRIVEWAY RADIUS SHOULD BE MINIMUM OF 20 FT.
7. CURB RADIUS TO BE DISSIPATED BETWEEN LIMITS NOTED ABOVE.
8. 7' MIN. BETWEEN DRIVEWAYS ON ADJACENT LOTS. 45' MIN. BETWEEN DRIVEWAYS ON SAME LOT.
9. NO RADIUS ENCROACHMENT SHALL BE ALLOWED ACROSS AN ADJOINING PROP. FRONTAGE. THIS IS DETERMINED BY EXTENDING A LINE FROM THE PROPERTY CORNER PERPENDICULAR TO THE R/W TO THE CURB AND GUTTER LOCATION.
10. ALL CONCRETE MUST BE POURED ON SAME DAY AS INSPECTION OR RE-INSPECTION IS REQUIRED.
11. FINISH THE SURFACE TO GRADE AND CROSS SECTION WITH A FLOAT, TROWEL SMOOTH AND FINISH WITH A BROOM
12. DRIVEWAY RADIUS SHALL BE A MINIMUM OF 5' FROM ANY CATCH BASIN.
13. WHERE UTILITY BOXES/VAULTS MUST BE LOCATED IN THE SIDEWALK, THEY SHALL HAVE A MINIMUM 3" WIDE FRAME OF CONCRETE AROUND THEM.

CITY OF RALEIGH
STANDARD DETAIL

DRIVEWAY AND SIDEWALK DETAIL

REVISIONS
DATE: 12/2022
DATE: 08/2023

DATE: 8/2020
NOT TO SCALE

T-10.01.2

SHEET 2 OF 4

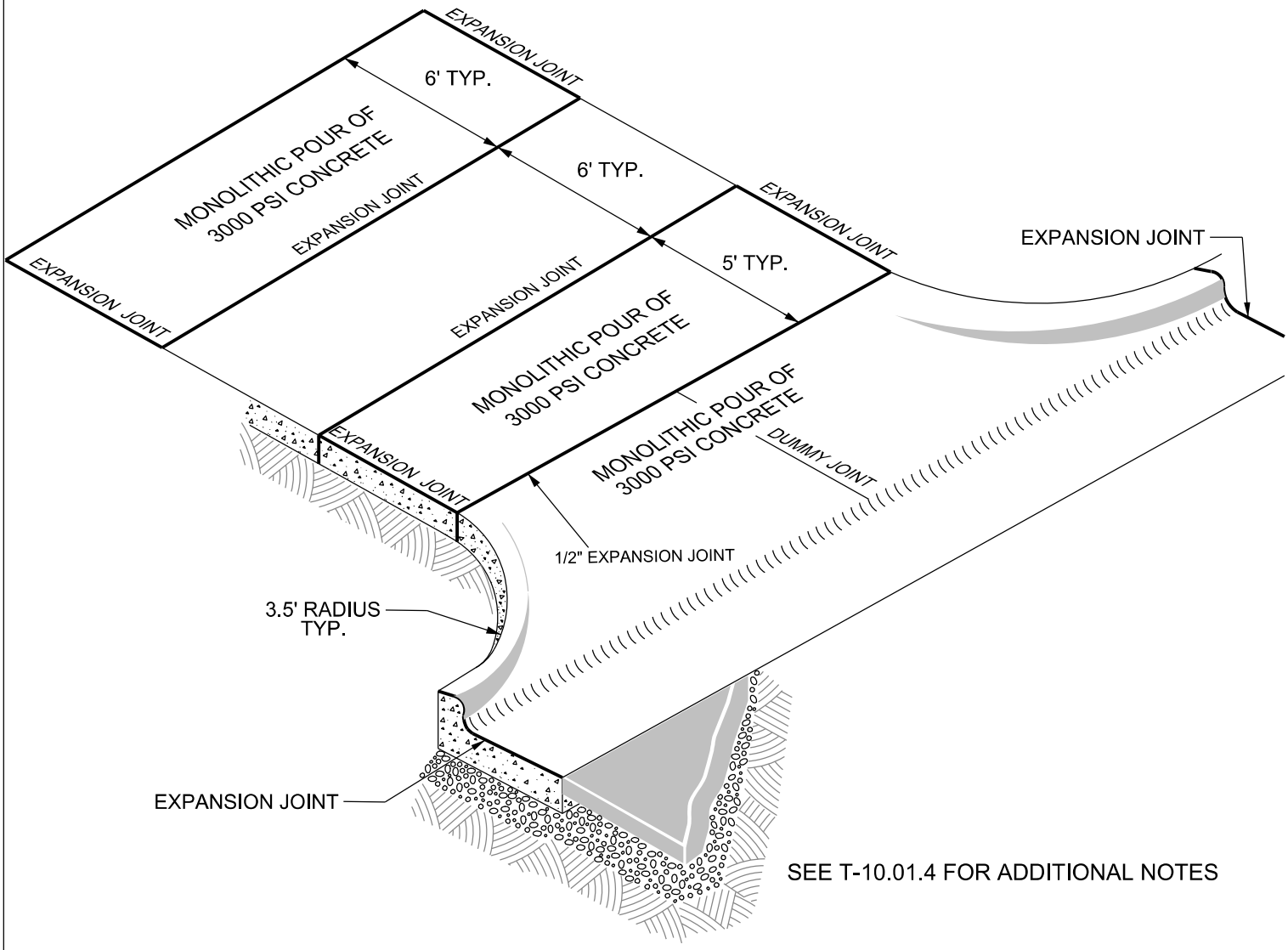

SEE T-10.01.4 FOR ADDITIONAL NOTES

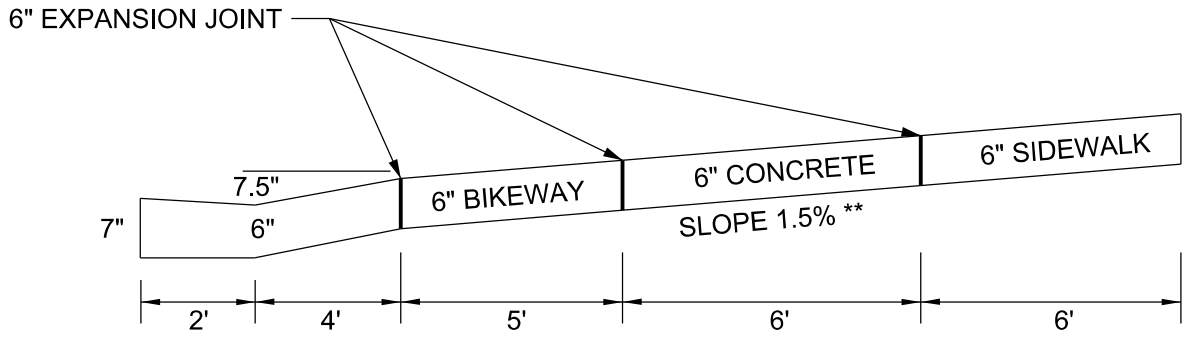

** 2.08% (1:48) max

SHEET 3 OF 4

CITY OF RALEIGH STANDARD DETAIL	
REVISIONS	DATE: 8/2022 NOT TO SCALE
DATE: 12/2022	DRIVEWAY, BIKEWAY AND SIDEWALK DETAIL
	T-10.01.3

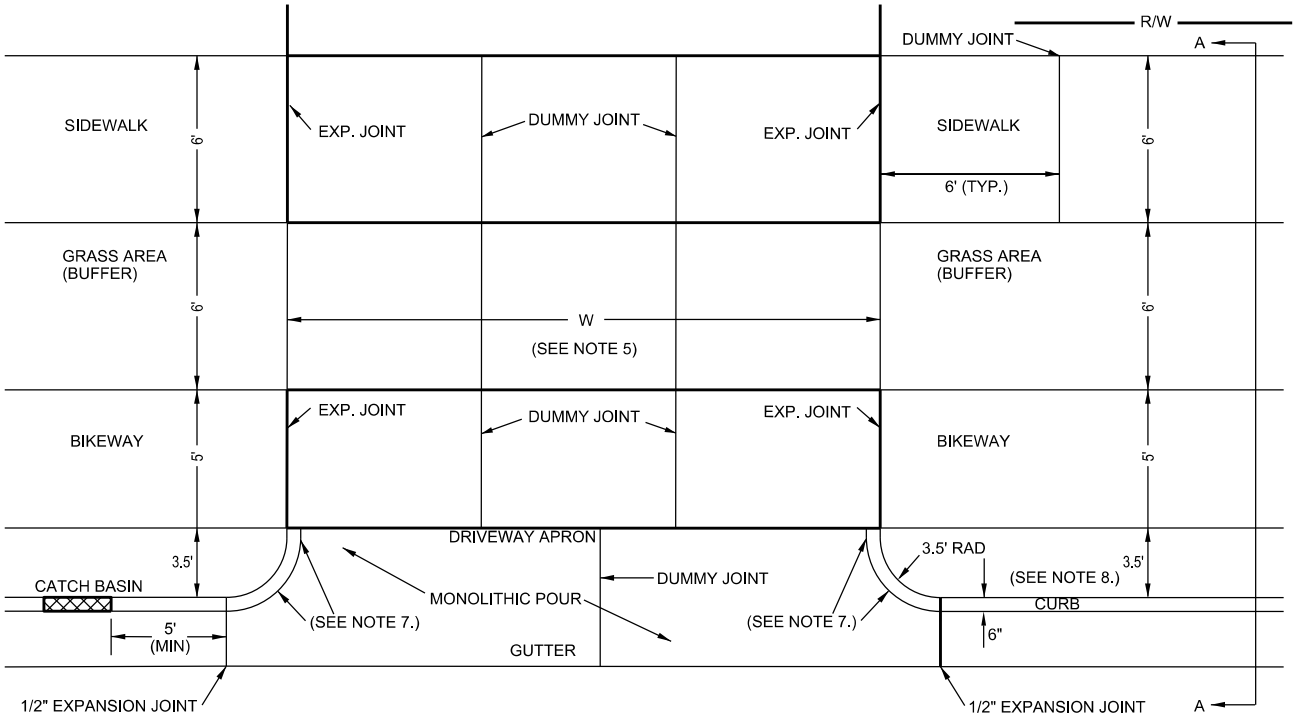

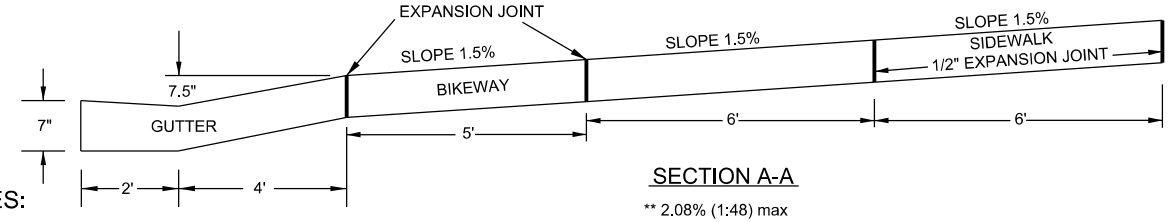

SECTION A-A

** 2.08% (1:48) max

NOTES:

1. WHEN A DRIVEWAY IS TO BE CONSTRUCTED WHERE FINAL LAYER OF ASPHALT HAS BEEN PLACED, THE CURB CAN BE SAW CUT IN A STRAIGHT LINE AND REMOVED. IF THE FINAL LAYER HAS NOT BEEN PLACED, THE ENTIRE CURB AND GUTTER SHALL BE REMOVED AND THE DRIVEWAY SHALL BE A MONOLITHIC POUR USING 3000 PSI ,MAX. 4" SLUMP CONCRETE.
2. EXPANSION MATERIAL SHALL EXTEND THE FULL DEPTH OF THE CONCRETE. 1/2" EXPANSION JOINTS ALONG SIDEWALK SHALL BE LOCATED AT NOT MORE THAN 40' INTERVALS & DUMMY CONSTRUCTION JOINTS AT 6' INTERVALS. DUMMY JOINTS SHALL BE AT LEAST 1/3 THE SLAB THICKNESS IN DEPTH.
3. SLOPE ON UNPAVED AREAS BETWEEN BACK OF CURB & SIDEWALK SHALL BE 1/4" PER FT.
4. NO EXPOSED AGGREGATE OR OTHER SPECIAL SURFACE TREATMENTS IN ROW.
5. W-DIMENSION AS SHOWN ON PLAN VIEW SHALL BE AS FOLLOWS:
   10' MINIMUM, 18' MAXIMUM FOR RESIDENTIAL DRIVEWAYS
   36' MAXIMUM FOR COMMERCIAL DRIVEWAYS
6. THE DISTANCE FROM THE END OF A STREET CURB RADIUS TO THE BEGINNING OF THE DRIVEWAY RADIUS SHOULD BE MINIMUM OF 20 FT.
7. CURB RADIUS TO BE DISSIPATED BETWEEN LIMITS NOTED ABOVE.
8. 7' MIN. BETWEEN DRIVEWAYS ON ADJACENT LOTS.
   45' MIN. BETWEEN DRIVEWAYS ON SAME LOT.
9. NO RADIUS ENCROACHMENT SHALL BE ALLOWED ACROSS AN ADJOINING PROP. FRONTAGE. THIS IS DETERMINED BY EXTENDING A LINE FROM THE PROPERTY CORNER PERPENDICULAR TO THE R/W TO THE CURB AND GUTTER LOCATION.
10. ALL CONCRETE MUST BE POURED ON SAME DAY AS INSPECTION OR RE-INSPECTION IS REQUIRED.
11. FINISH THE SURFACE TO GRADE AND CROSS SECTION WITH A FLOAT, TROWEL SMOOTH AND FINISH WITH A BROOM
12. DRIVEWAY RADIUS SHALL BE A MINIMUM OF 5' FROM ANY CATCH BASIN.
13. WHERE UTILITY BOXES/VAULTS MUST BE LOCATED IN THE SIDEWALK, THEY SHALL HAVE A MINIMUM 3" WIDE FRAME OF CONCRETE AROUND THEM.

SHEET 4 OF 4

CITY OF RALEIGH
STANDARD DETAIL

DATE: 8/2022 NOT TO SCALE

REVISIONS
DATE: 12/2022
DATE: 08/2023

DRIVEWAY, BIKEWAY AND SIDEWALK DETAIL

T-10.01.4

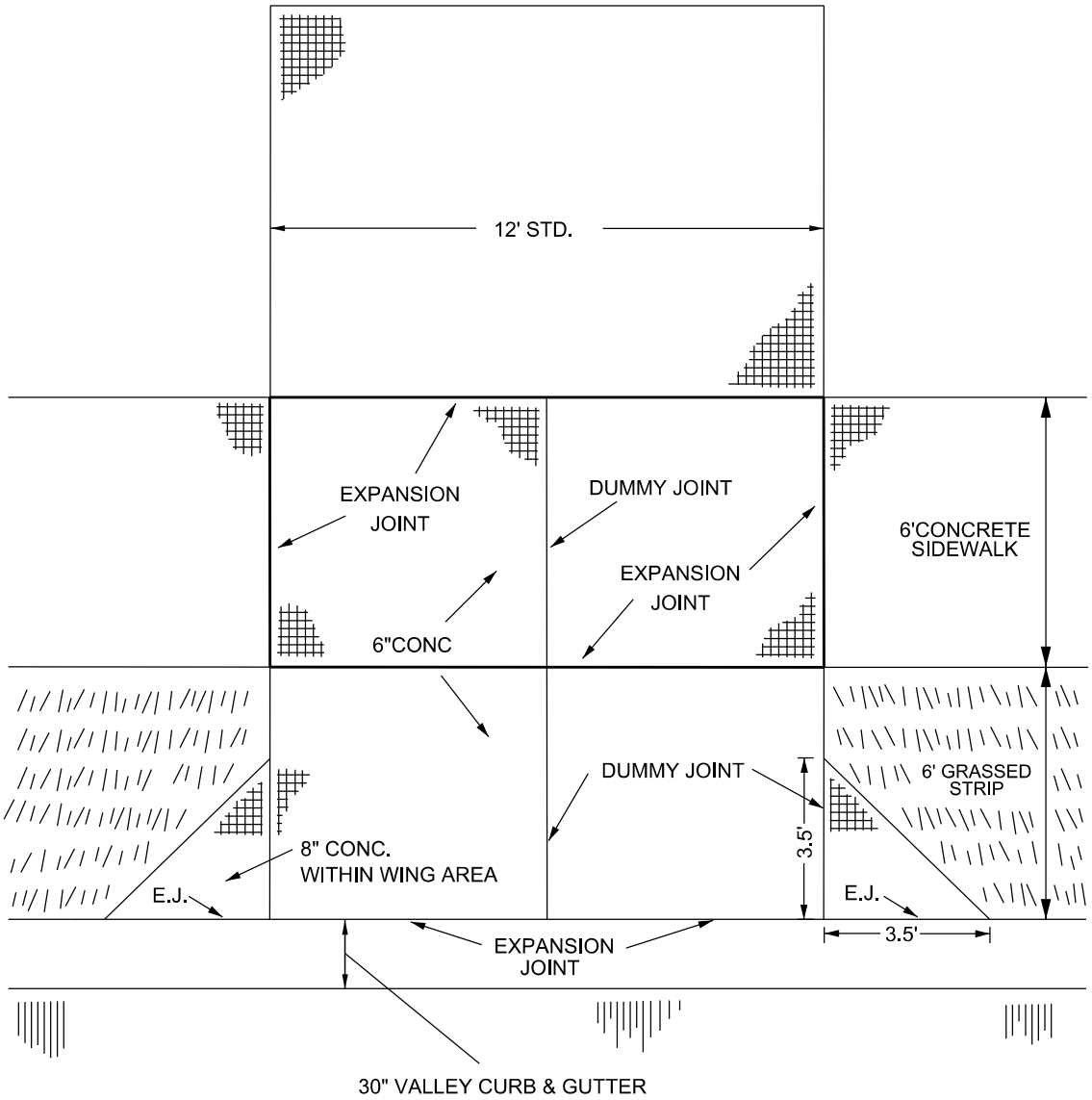

NOTES:

1. SEE STANDARD DETAIL T-10.26.1 FOR CURB AND GUTTER DETAILS.
2. EXPANSION MATERIAL SHALL EXTEND THE FULL DEPTH OF THE CONCRETE.
3. ALL CONCRETE SHALL BE 3000 PSI (MIN.).

CITY OF RALEIGH
STANDARD DETAIL

REVISIONS	DATE: 8/2020	NOT TO SCALE
	DRIVEWAY FOR VALLEY TYPE CURB & GUTTER	
	T-10.02	

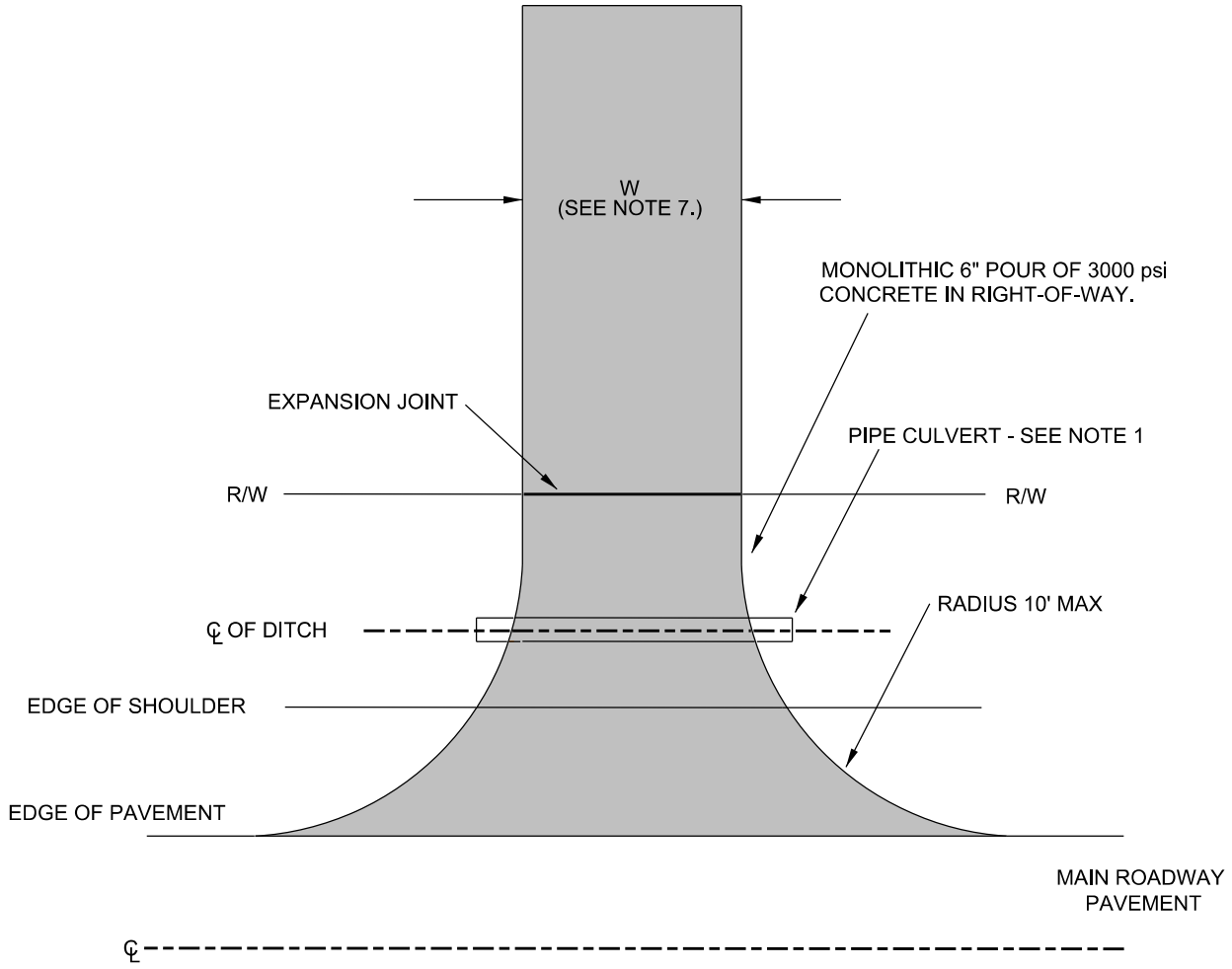

WITH UNPAVED ROADSIDE DITCH

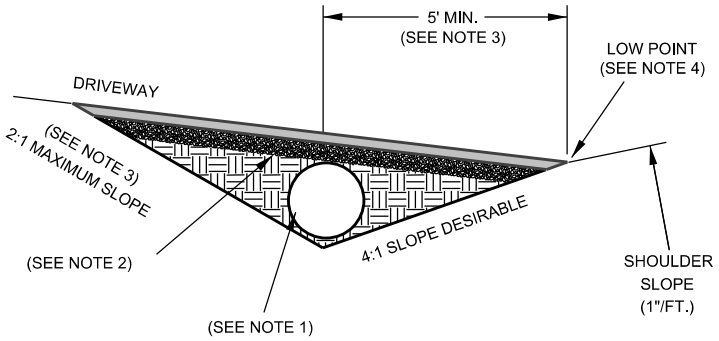

NOTES:

1. PIPE TO BE RCP OR HDPE AND SIZED TO CARRY THE DESIGN FLOW OF THE DITCH FOR A 10-YEAR, 24-HOUR STORM EVENT; THE MINIMUM ACCEPTABLE PIPE SIZE IS 15" IF THE DESIGN FLOW WOULD REQUIRE A SMALLER PIPE. PIPE TO BE EXTENDED TO ALLOW ACCEPTABLE COVER AND SLOPES.
2. 12" MINIMUM COVER OVER PIPE MEASURED FROM TOP OF PAVEMENT.
3. STEEPER SLOPES CAN BE ALLOWED WHERE SPECIAL STABILIZATION IS PROVIDED IN ACCORDANCE WITH EROSION AND SEDIMENTATION CONTROL ORDINANCE.
4. USE 5' VERTICAL CURVE FOR TRANSITION.
5. SEE CITY OF RALEIGH STREET DESIGN MANUAL FOR COMMERCIAL DRIVEWAYS.
6. NO EXPOSED AGGREGATE OR OTHER SPECIAL SURFACE TREATMENTS IN RIGHT OF WAY.
7. W-DIMENSION AS SHOWN ON PLANS SHALL BE AS FOLLOWS; 10' MINIMUM, 18' MAXIMUM FOR RESIDENTIAL DRIVEWAYS.

CITY OF RALEIGH
STANDARD DETAIL

REVISIONS	DATE: 8/2020 NOT TO SCALE
	RESIDENTIAL DRIVEWAY INSTALLATION ON NON CURB & GUTTERED STREETS
	T-10.03

DRIVEWAY GRADES

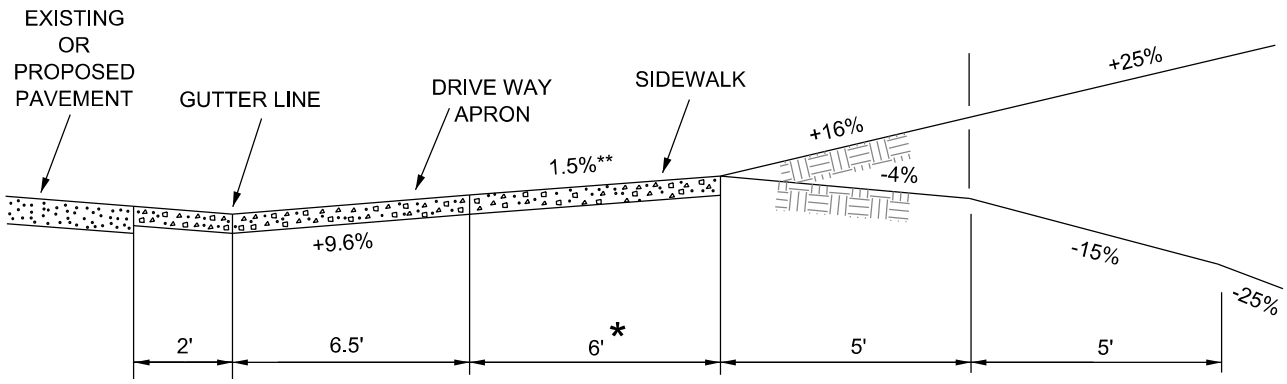

* 5' FOR SENSITIVE AREA AVENUE
AND SENSITIVE AREA RESIDENTIAL STREET

** 2.08% (1:48) max

A. CURB & GUTTER , SIDEWALK SECTION

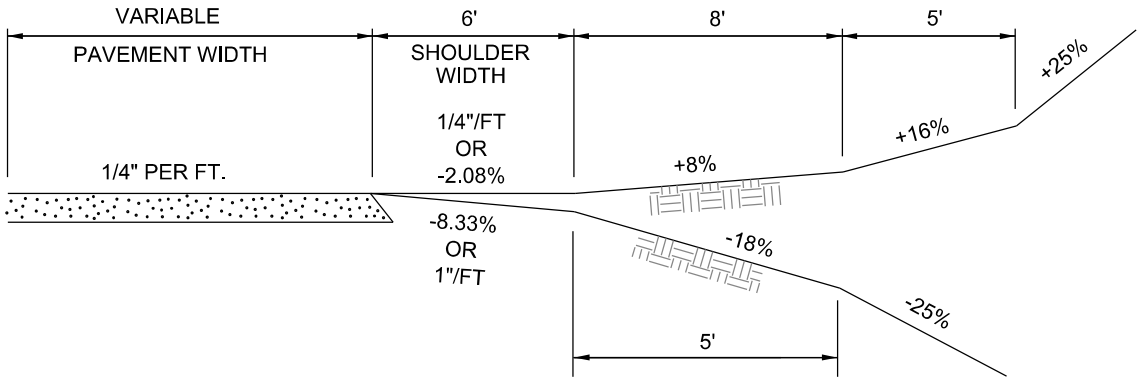

B. SHOULDER SECTION

NOTES:

IF THE SLOPE BETWEEN THE TOP OF CURB AND GUTTER AND A POINT 30 FEET FROM THE CURB AND GUTTER EXCEEDS 20%, THIS SLOPE SHALL BE ADJUSTED TO A MAXIMUM OF 8.33% (1"/FT) UP OR 4.17% (1/2" /FT) DOWN.

CITY OF RALEIGH STANDARD DETAIL		
REVISIONS	DATE: 8/2020	NOT TO SCALE
DATE: 12/2022	DRIVEWAY GRADES	
	T-10.04	

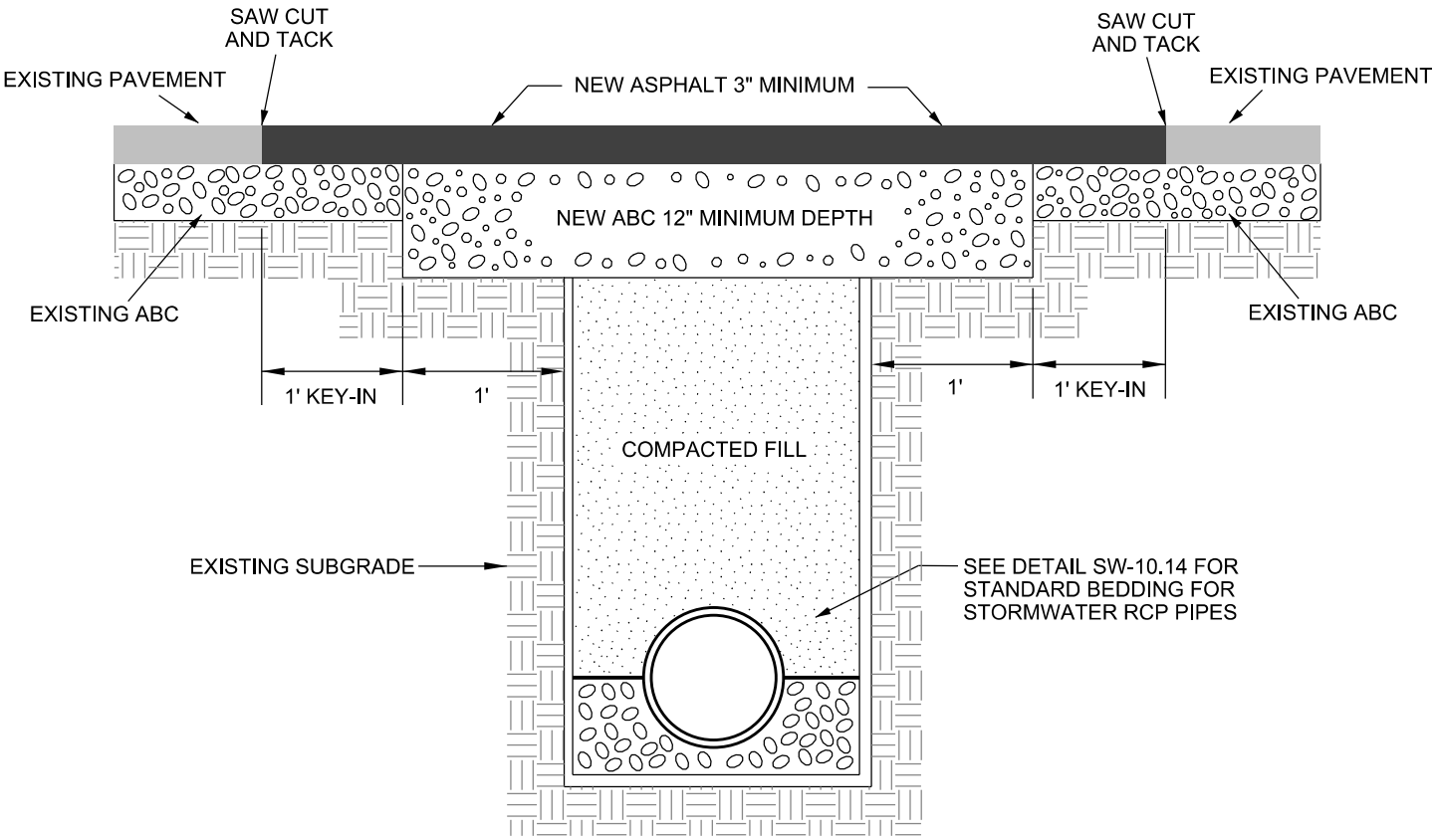

NOTES:

1. THE PAVEMENT EDGE SHALL BE DEFINED BY A STRAIGHT EDGE FORMED BY A MACHINED SAW CUT.
2. THE TRENCH SUBGRADE MATERIAL SHALL BE BACKFILLED WITH SUITABLE MATERIAL AND COMPACTED TO A DENSITY OF AT LEAST 95% OF THAT OBTAINED BY COMPACTING A SAMPLE OF THE MATERIAL IN ACCORDANCE WITH AASHTO T-99 AS MODIFIED BY NCDOT.
3. THE FINAL 1' OF FILL SHALL CONSIST OF ABC MATERIAL COMPACTED TO A DENSITY EQUAL TO 100% OF THAT OBTAINED BY COMPACTING A SAMPLE OF THE MATERIAL IN ACCORDANCE WITH AASHTO T-80 AS MODIFIED BY NCDOT. BITUMINOUS BASE OR BINDER MAY BE SUBSTITUTED IF APPROVED BY TRANSPORTATION DIRECTOR OR DESIGNEE.
4. THE ENTIRE THICKNESS/VERTICAL EDGE OF THE CUT SHALL BE TACKED.
5. THE SAME DEPTH OF PAVEMENT MATERIAL WHICH EXISTS SHALL BE REINSTALLED, BUT IN NO CASE SHALL THE ASPHALT BE LESS THAN 3" THICK.
6. THE ASPHALT PAVEMENT MATERIAL SHALL BE INSTALLED AND COMPACTED THOROUGHLY AND ROLLED WITH A SMOOTH DRUM ROLLER TO ACHIEVE A SMOOTH, LEVEL PATCH.

CITY OF RALEIGH
STANDARD DETAIL

REVISIONS	DATE: 8/2020	NOT TO SCALE
DATE: 08/2023	ASPHALT PAVEMENT PATCH AND RCP PIPE BACKFILL	
	T-10.05.1	

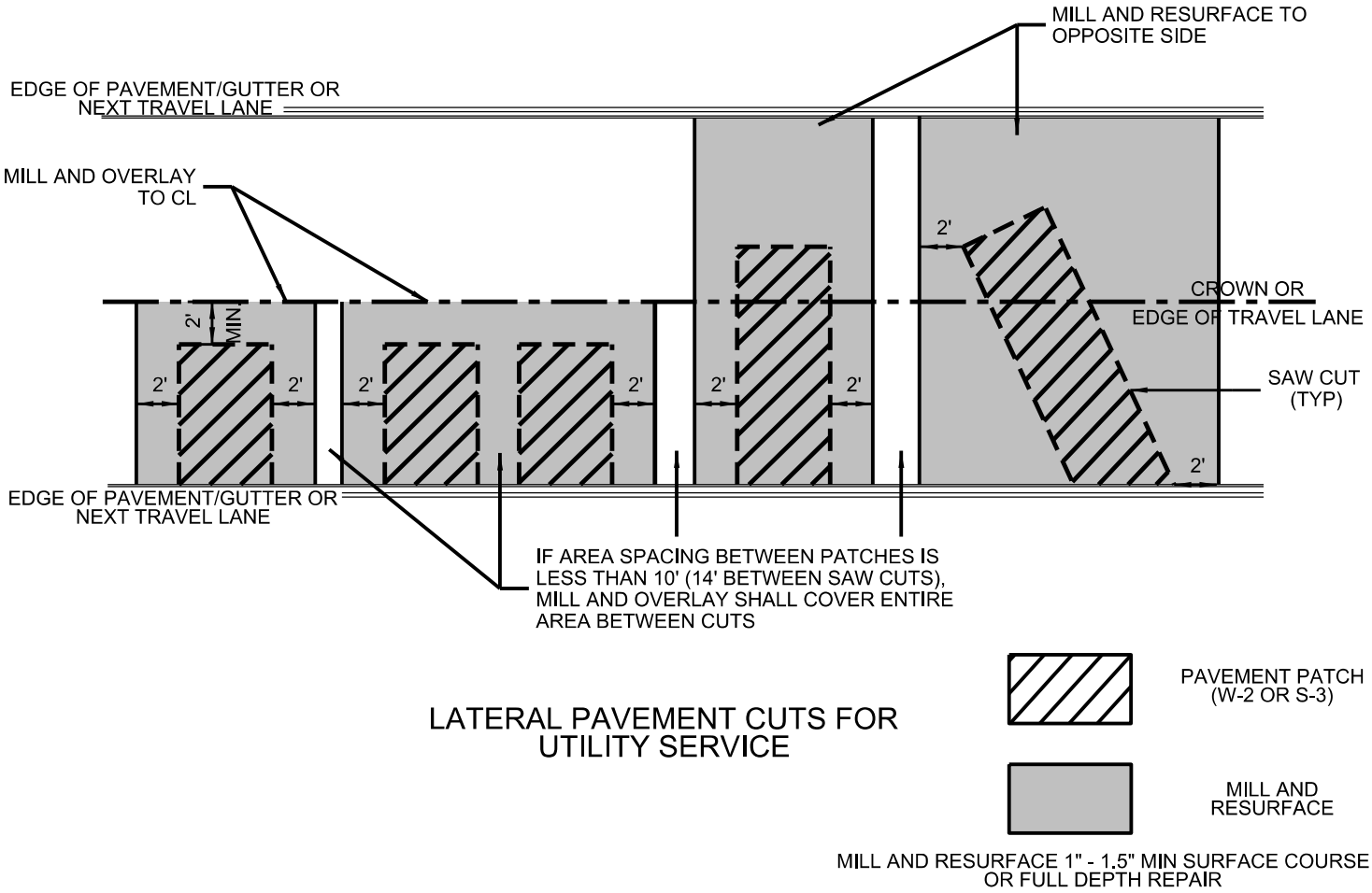

LATERAL PAVEMENT CUTS FOR UTILITY SERVICE

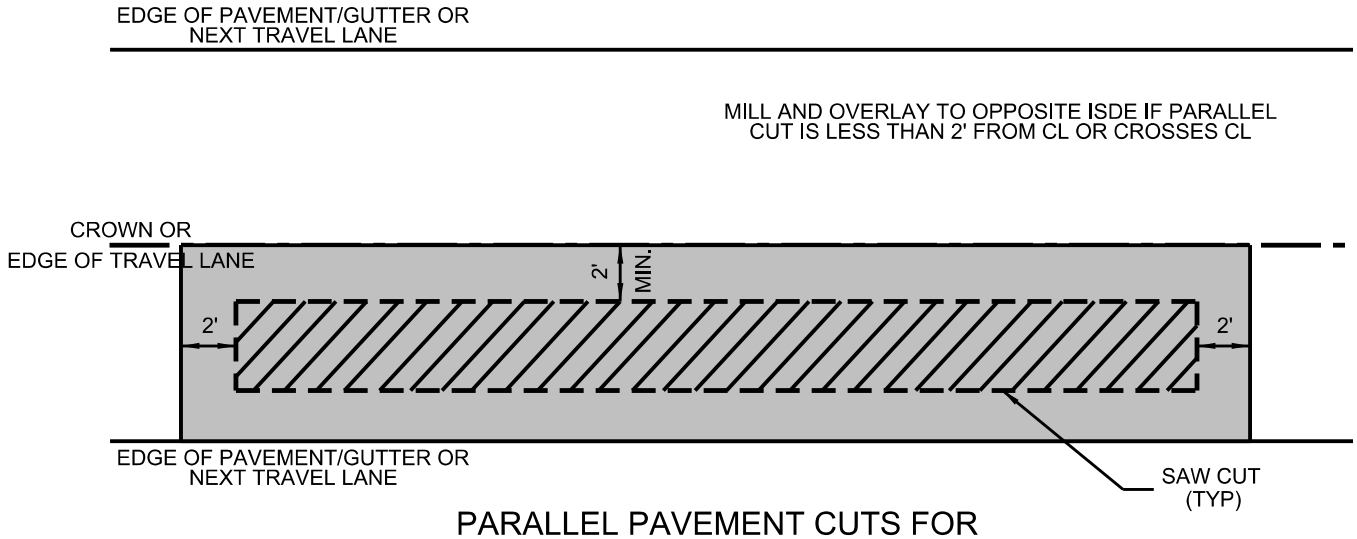

PARALLEL PAVEMENT CUTS FOR UTILITY SERVICE

NOTES:

1. THE PAVEMENT EDGES SHALL BE DEFINED BY A STRAIGHT EDGE FORMED BY A MACHINED SAW CUT OR MILLIING MACHINE
2. THE TRENCH SUBGRADE MATERIAL SHALL BE BACKFILLED WITH SUITABLE MATERIAL AND COMPACTED TO A DENSITY OF AT LEAST 95% OF THAT OBTAINED BY COMPACTING A SAMPLE OF THE MATERIAL IN ACCORDANCE WITH AASHTO T-99 AS MODIFIED BY NCDOT
3. THE FINAL 1" OF FILL SHALL CONSIST OF ABC MATERIAL COMPCATED TO A DENSITY EQUAL TO 100% OF THAT OBTAINED BY COMPACTING A SAMPLE OF THE MATERIAL IN ACCORDANCE WITH AASHTO T-80 AS MODIFIED BY NCDOT
4. THE ENTIRE THICKNESS/VERTICAL EDGE OF THE CUT SHALL BE TACKED
5. THE SAME DEPTH OF PAVEMENT MATERIAL WHICH EXISTS SHALL BE REINSTALLED, BUT IN NO CASE SHALL THE ASPHALT BE LESS THAN 3" THICK
6. THE ASPHALT PAVEMENT MATERIAL SHALL BE INSTALLED, COMPACTED THOROUGHLY AND ROLLED WITH A SMOOTH DRUM ROLLER TO LEVEL PATCH

CITY OF RALEIGH

STANDARD DETAIL

REVISIONS	DATE: 8/2023	NOT TO SCALE
	ASPHALT PAVEMENT PATCH AND RCP PIPE BACKFILL	
	T-10.05.2	

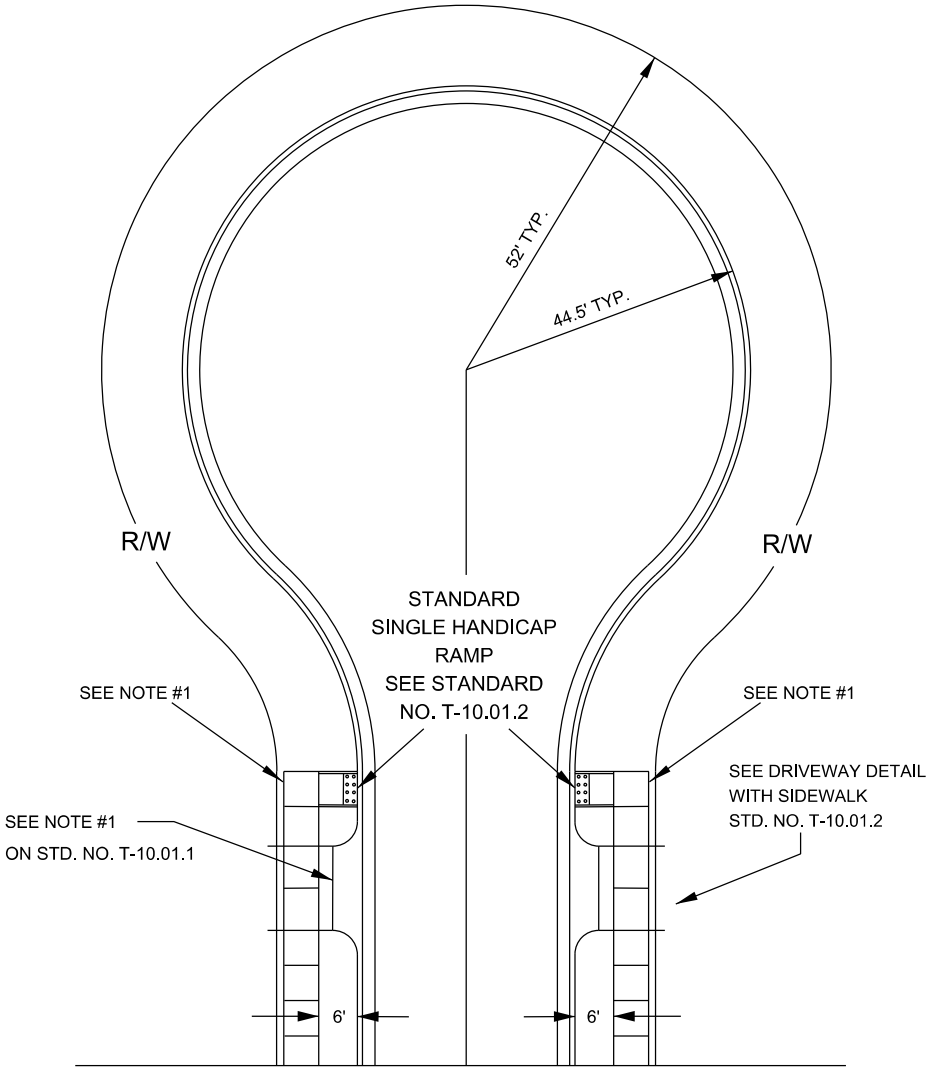

NOTES:

1. IF DRIVEWAY IS WITHIN CLOSE PROXIMITY OF ACCESS RAMP, TIE SIDEWALK INTO DRIVEWAY.
2. REFER TO STANDARD DETAIL T-10.01.2, DRIVE WAY AND SIDEWALK DETAIL, SHEET 1 OF 2.

CITY OF RALEIGH STANDARD DETAIL	
REVISIONS	DATE: 8/2020 NOT TO SCALE
	STANDARD RESIDENTIAL CUL-DE-SAC
	T-10.06

P.S. - PAVED SHOULDERS
G.S. - GRASS SHOULDERS

** 2.08% (1:48) max

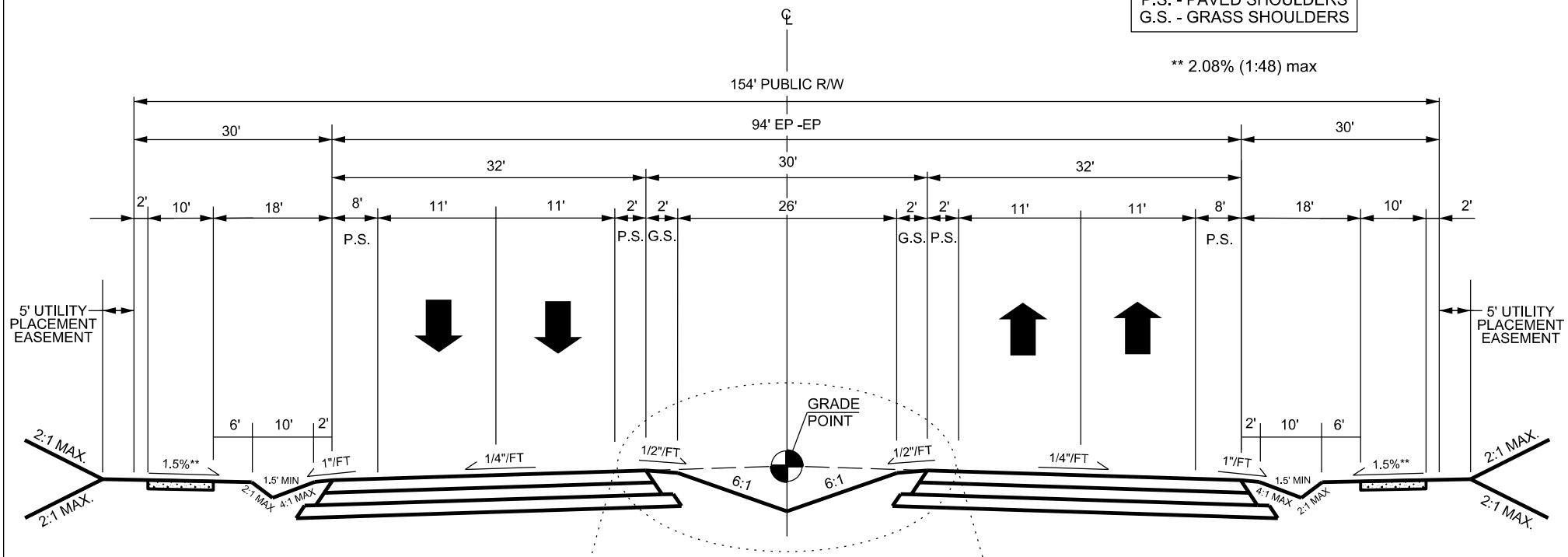

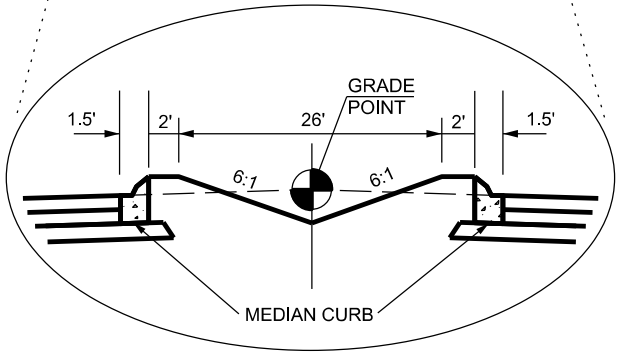

(4-LANE CURB ALTERNATIVE)

GENERAL	
WALKWAY TYPE	MULTI-USE PATH
PLANTING TYPE	TREE/LAWN
TREE SPACING	50' O.C. AVG
PARKING TYPE	NONE

PAVEMENT DESIGN
3" S9.5B 4" I19.0B 10" ABC

CITY OF RALEIGH
STANDARD DETAIL

REVISIONS

DATE: 12/2022

DATE: 8/2020

NOT TO SCALE

SENSITIVE AREA PARKWAY

T-10.07

P.S. - PAVED SHOULDERS
G.S. - GRASS SHOULDERS

** 2.08% (1:48) max

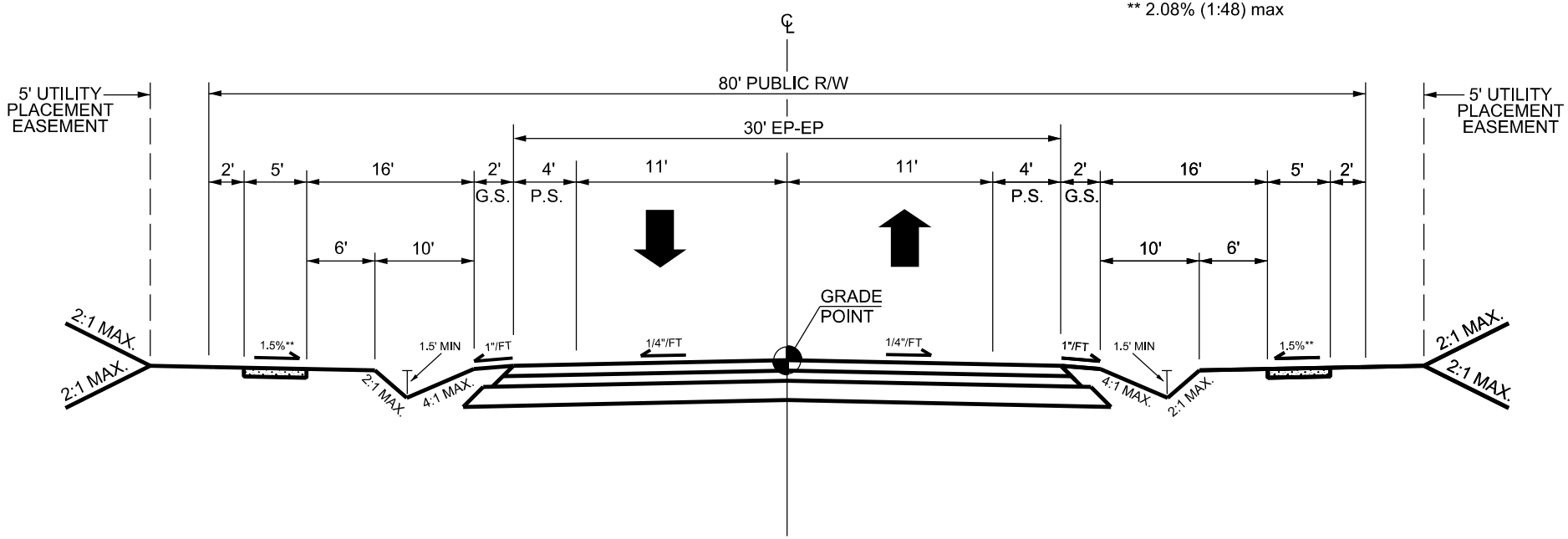

GENERAL	
WALKWAY TYPE	SIDEWALK
PLANTING TYPE	TREE/LAWN
TREE SPACING	50' O.C. AVG
PARKING TYPE	NONE

PAVEMENT DESIGN
3" S9.5B
3" I19.0B
8" ABC

CITY OF RALEIGH
STANDARD DETAIL

REVISIONS

DATE: 12/2022

DATE: 8/2020

NOT TO SCALE

SENSITIVE AREA AVENUE

T-10.08

G.S. - GRASSED SHOULDER

** 2.08% (1:48) max

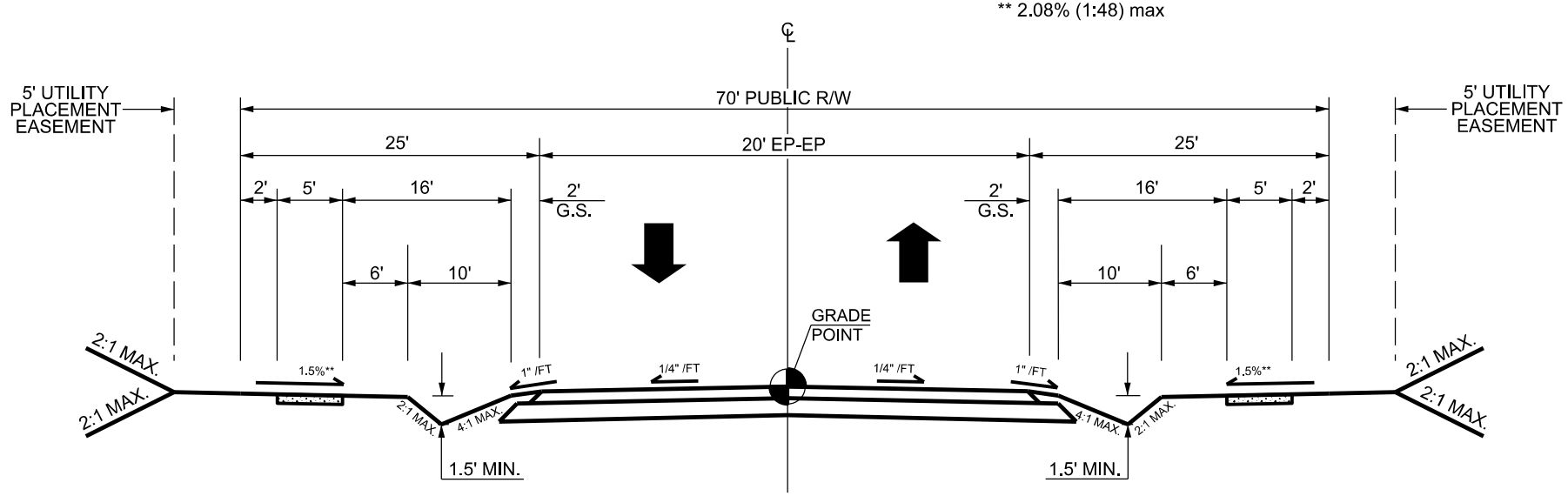

GENERAL	
WALKWAY TYPE	SIDEWALK
PLANTING TYPE	TREE/LAWN
TREE SPACING	50' O.C. AVG

PAVEMENT DESIGN
3" SF9.5A 8" ABC

CITY OF RALEIGH
STANDARD DETAIL

REVISIONS

DATE: 12/2022

DATE: 8/2020

NOT TO SCALE

SENSITIVE AREA
RESIDENTIAL STREET

T-10.09

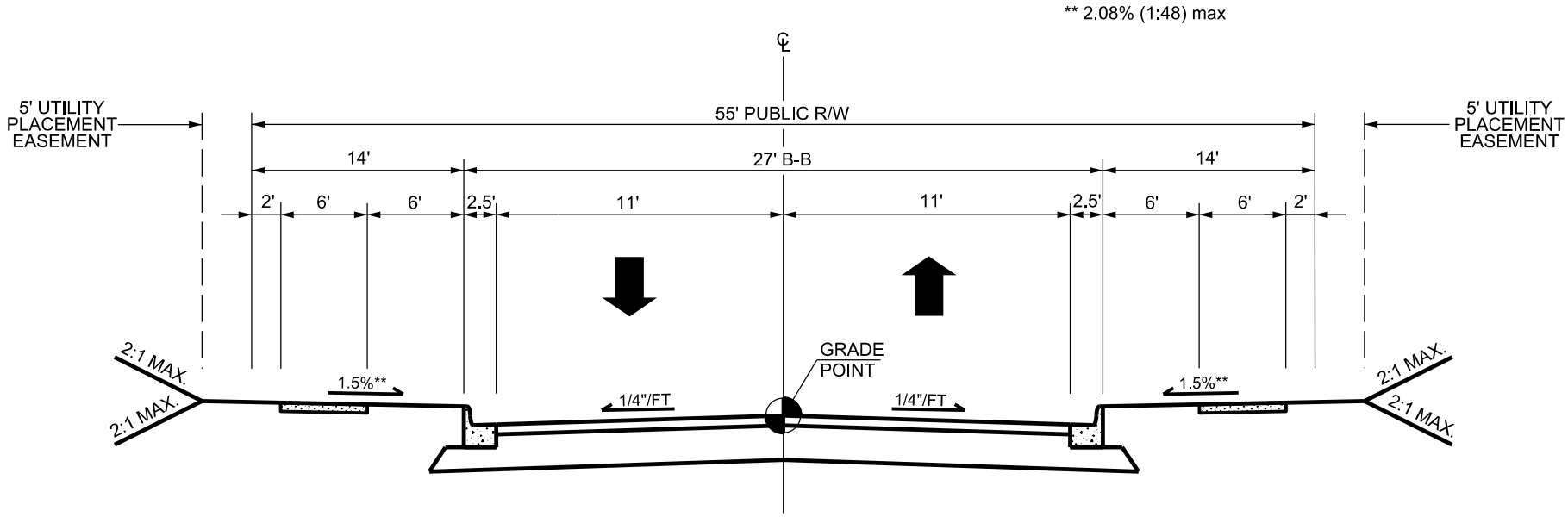

GENERAL	
WALKWAY TYPE	SIDEWALK
PLANTING TYPE	TREE/LAWN
TREE SPACING	40' O.C. AVG
PARKING TYPE	PARALLEL STAGGERED

PAVEMENT DESIGN
3" SF9.5A 8" ABC

CITY OF RALEIGH
STANDARD DETAIL

REVISIONS

DATE: 12/2022

DATE: 8/2020

NOT TO SCALE

NEIGHBORHOOD YIELD

T-10.10

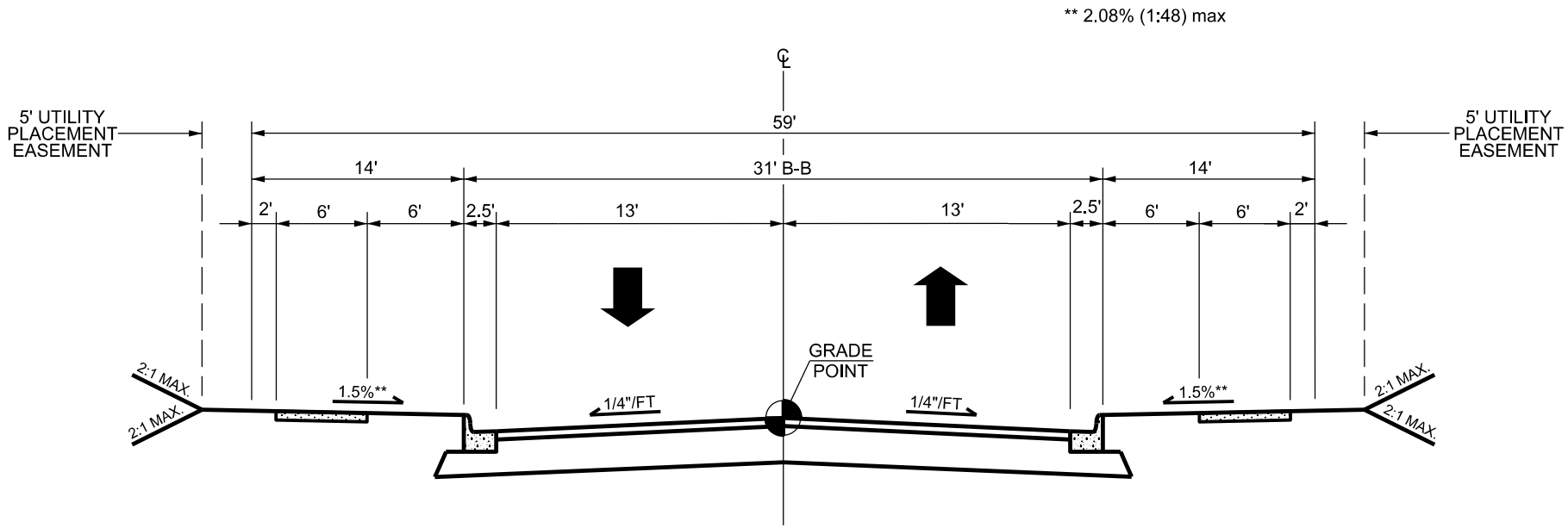

GENERAL	
WALKWAY TYPE	SIDEWALK
PLANTING TYPE	TREE/LAWN
TREE SPACING	40' O.C. AVG
PARKING TYPE	PARALLEL ON 2 SIDES

PAVEMENT DESIGN
3" SF9.5A 8" ABC

CITY OF RALEIGH
STANDARD DETAIL

REVISIONS
DATE: 12/2022

DATE: 8/2020
NOT TO SCALE

NEIGHBORHOOD LOCAL STREET
(TWO - WAY)

T-10.11

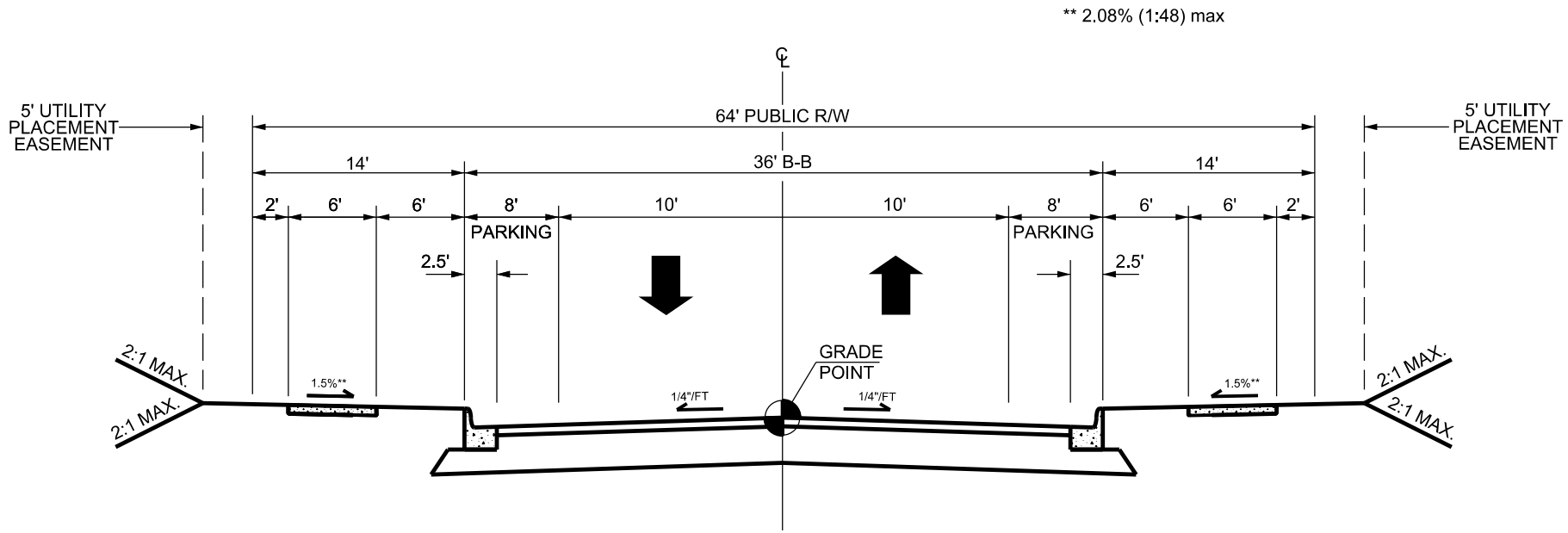

GENERAL	
WALKWAY TYPE	SIDEWALK BOTH SIDES
PLANTING TYPE	TREE/LAWN
TREE SPACING	40' O.C. AVG
PARKING TYPE	PARALLEL ON 2 SIDES

PAVEMENT DESIGN
3" SF9.5A 8" ABC

CITY OF RALEIGH
STANDARD DETAIL

REVISIONS
DATE: 12/2022

DATE: 8/2020
NOT TO SCALE

NEIGHBORHOOD STREET

T-10.12

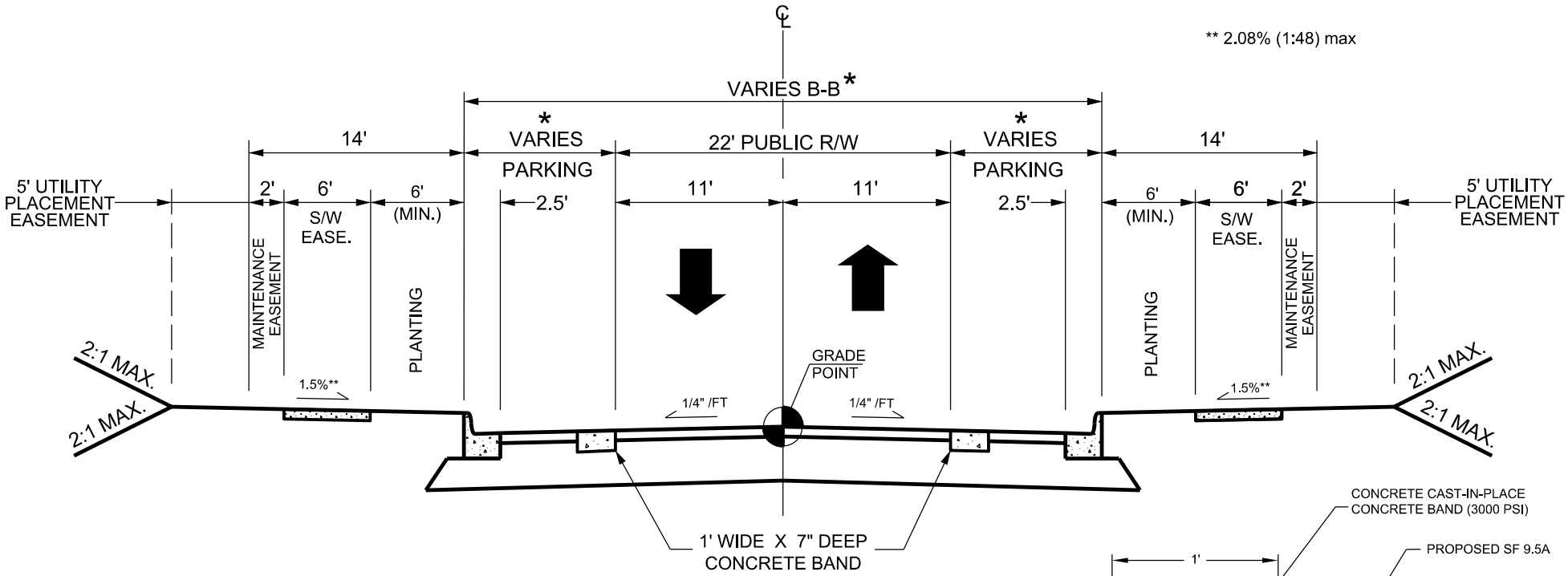

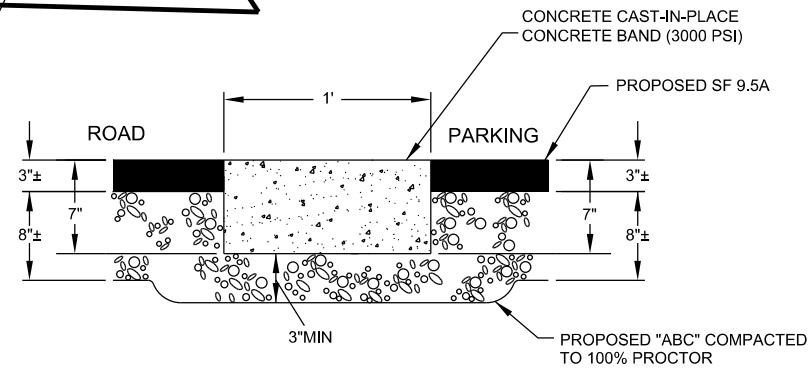

CONCRETE BAND CROSS-SECTION

* PARKING DIMENSION VARIES: PARALLEL 8', HEAD-IN 18', 60° ANGLE 20'

GENERAL	
WALKWAY TYPE	SIDEWALK
PLANTING TYPE	TREE/LAWN
TREE SPACING	40' O.C.AVG.
PARKING TYPE	PARALLEL, HEAD-IN, ANGLE

PAVEMENT DESIGN
3" SF9.5A 8" ABC

CITY OF RALEIGH
STANDARD DETAIL

REVISIONS
DATE: 12/2022

DATE: 8/2020
NOT TO SCALE

MULTIFAMILY STREET

T-10.13

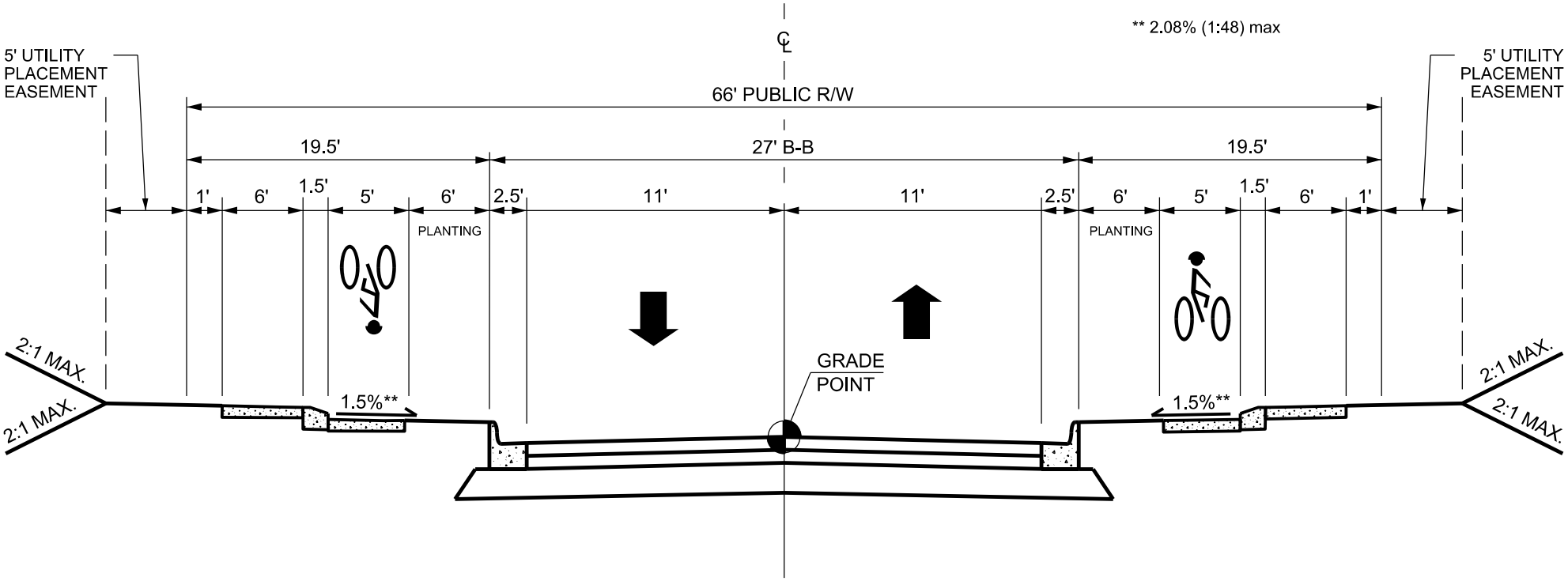

NOTE

1. THE BIKE LANE MATERIAL SHALL BE BLACK-DYED CONCRETE, SEE T-30.01.2.
2. THE BUFFER WIDTH BETWEEN THE SIDEWALK AND BIKE LANE IS A MAXIMUM AND MAY BE REDUCED AS LONG AS A) NOTE 3 IS MET AND B) THE TOTAL WIDTH OF THE SIDEWALK, BUFFER AND BIKEWAY IS 12'5.
3. THE BUFFER BETWEEN THE BIKE LANE AND THE SIDEWALK MUST BE DETECTABLE BY PEOPLE WITH VISION DISABILITIES. OPTIONS INCLUDE A ROLLED OR BEVELED CURB WHERE THE HEIGHT DIFFERENTIAL BETWEEN THE SIDEWALK AND BIKE LANE IS BETWEEN 2" AND 3" OR A DETECTABLE GUIDANCE SURFACE SET 1' OFF THE EDGE OF THE BIKEWAY IF THE SIDEWALK AND BIKEWAY ARE FLUSH
4. WHERE A CURB IS USED, THE CURB HEIGHT SHALL BE BETWEEN 8" AND 12" AND THE CURB WIDTH SHALL BE BETWEEN 6" AND 9". AN EXPANSION JOINT SHALL BE PROVIDED ON EACH SIDE OF THE CURB.
5. IN CONTEXTS WITH A LOW VOLUME OF PEDESTRIANS, THE SIDEWALK, BUFFER AND BIKE LANE CAN BE COMBINED INTO A 12.5' WIDE MULTI-USE PATH, PENDING THE APPROVAL OF THE OFFICE OF TRANSPORTATION PLANNING

GENERAL	
WALKWAY TYPE	SIDEWALK
BIKEWAY TYPE	CURB-LEVEL BIKE LANE
PLANTING TYPE	TREE / LAWN
TREE SPACING	40' O.C. AVG
PARKING TYPE	NONE

STREET PAVEMENT DESIGN
3" S9.5B
3" I19.0B
8" ABC

CITY OF RALEIGH
STANDARD DETAIL

REVISIONS
DATE: 12/2022

DATE: 8/2020
NOT TO SCALE

AVENUE 2 LANE, UNDIVIDED

T-10.14

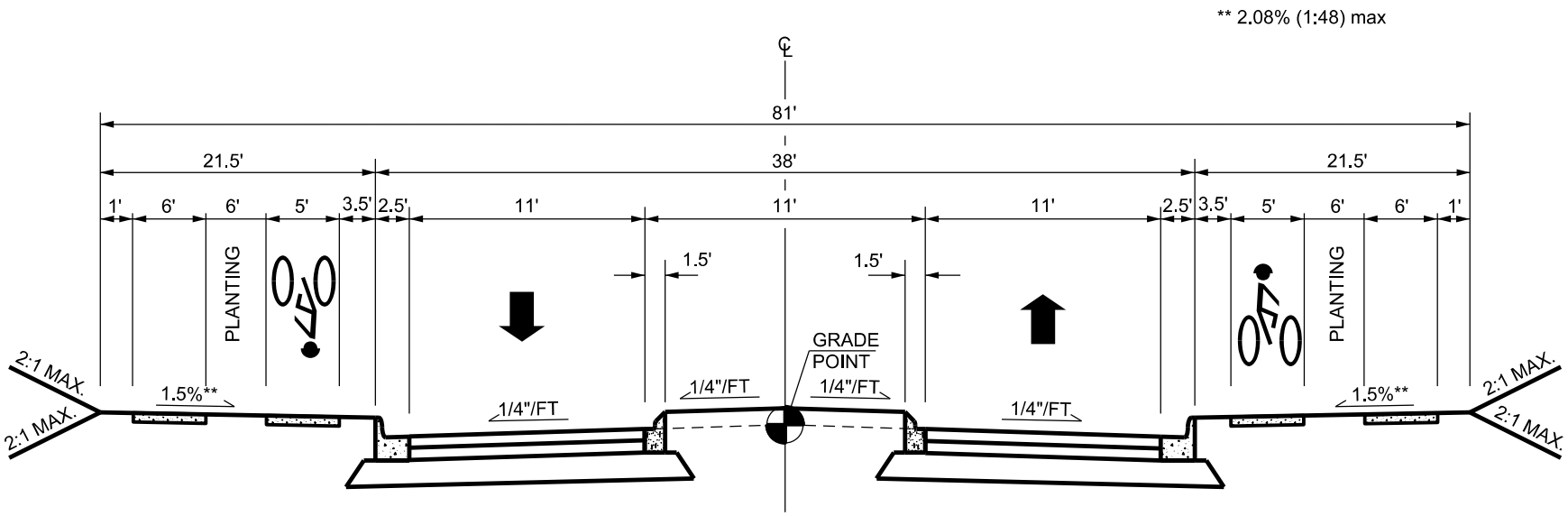

NOTE

1. THE BIKE LANE MATERIAL SHALL BE BLACK-DYED CONCRETE, SEE T-30.01.2.

GENERAL	
WALKWAY TYPE	SIDEWALK
BIKEWAY TYPE	CURB-LEVEL BIKE LANE
PLANTING TYPE	TREE / LAWN
TREE SPACING	40' O.C. AVG
PARKING TYPE	NONE

STREET PAVEMENT DESIGN
3" S9.5B
3" I19.0B
8" ABC

CITY OF RALEIGH
STANDARD DETAIL

REVISIONS
DATE: 12/2022

DATE: 8/2020
NOT TO SCALE

AVENUE 2 LANE, DIVIDED
(RAISED MEDIAN)

T-10.15

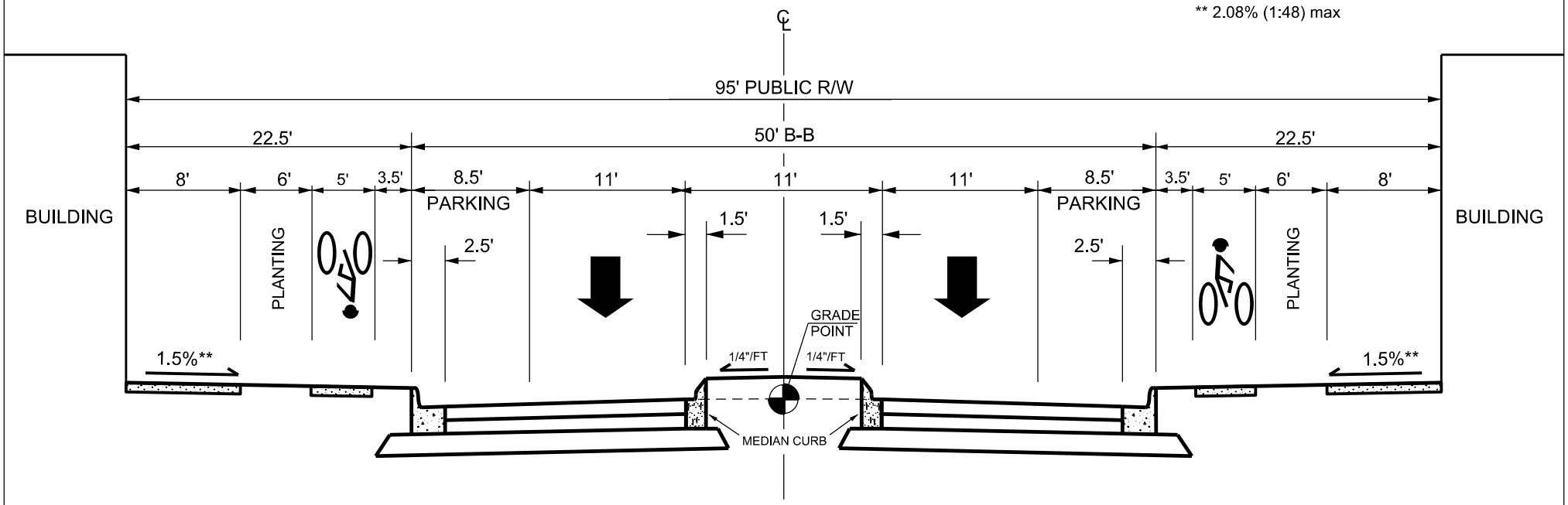

NOTE

1. THE BIKE LANE MATERIAL SHALL BE BLACK-DYED CONCRETE, SEE T-30.01.2.

GENERAL	
WALKWAY TYPE	SIDEWALK
BIKEWAY TYPE	CURB-LEVEL BIKE LANE
PLANTING TYPE	TREE / LAWN
TREE SPACING	40' O.C. AVG
PARKING TYPE	PARALLEL ON 2 SIDES

STREET PAVEMENT DESIGN
3" S9.5B
3" I19.0B
8" ABC

CITY OF RALEIGH
STANDARD DETAIL

REVISIONS
DATE: 12/2022

DATE: 8/2020
NOT TO SCALE

AVENUE 3 LANE,
PARALLEL PARKING

T-10.16

ANGLED PARKING

** 2.08% (1:48) max

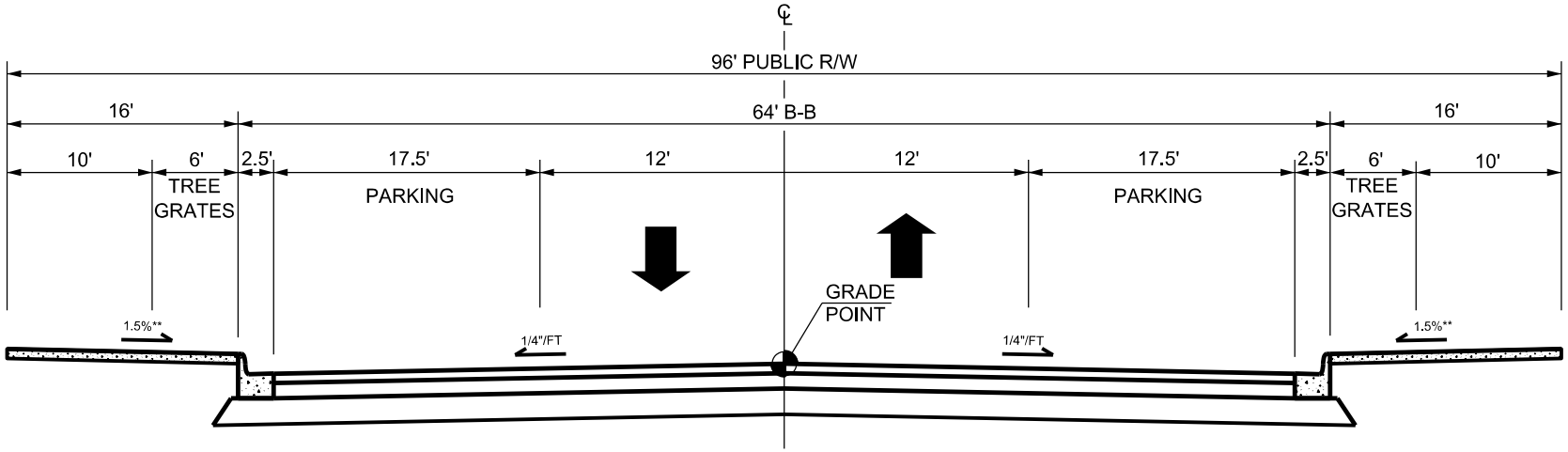

PARALLEL PARKING

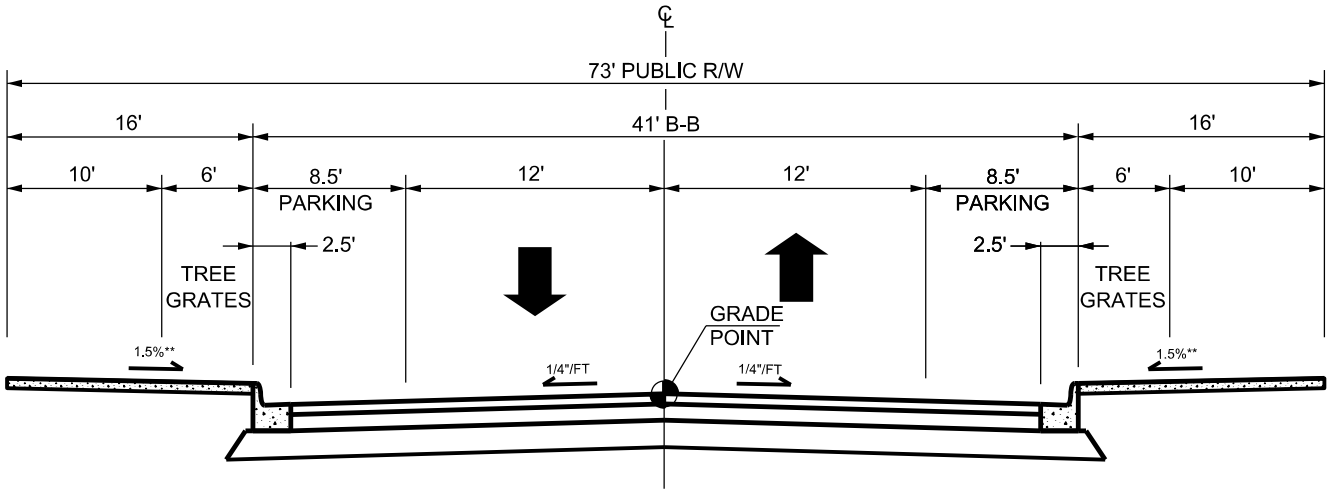

GENERAL	
WALKWAY TYPE	SIDEWALK ON 2 SIDES
PLANTING TYPE	TREE GRATES/LAWN
TREE SPACING	40' O.C. AVG
PARKING TYPE	PARALLEL/60° ANGLED

PAVEMENT DESIGN
3" S9.5B
3" I19.0B
8" ABC

CITY OF RALEIGH
STANDARD DETAIL

REVISIONS

DATE: 12/2022

DATE: 8/2020

NOT TO SCALE

MAIN STREET

T-10.17

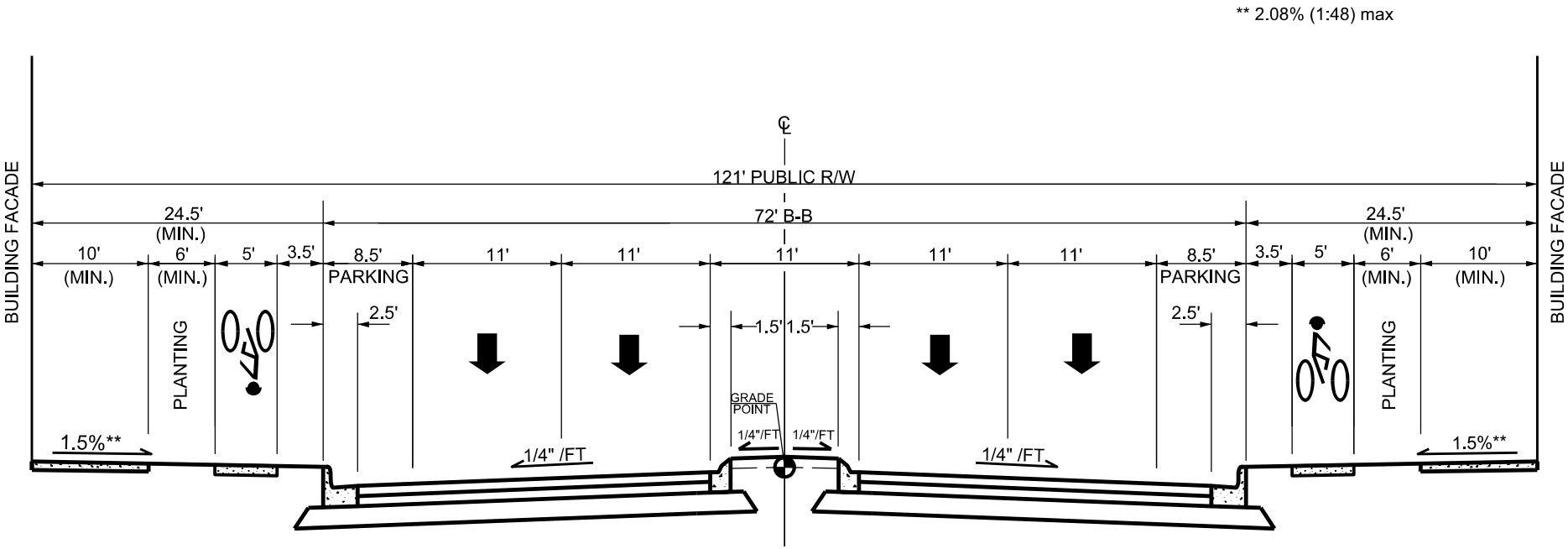

NOTE

1. THE BIKE LANE MATERIAL SHALL BE BLACK-DYED CONCRETE, SEE T-30.01.2.

PAVEMENT DESIGN
3" S9.5B 3" I19.0B 8" ABC

GENERAL	
WALKWAY TYPE	SIDEWALK
BIKEWAY TYPE	CURB-LEVEL BIKE LANE
PLANTING TYPE	TREE / LAWN
TREE SPACING	40' O.C. AVG
PARKING TYPE	PARALLEL ON 2 SIDES

CITY OF RALEIGH
STANDARD DETAIL

REVISIONS
DATE: 12/2022

DATE: 8/2020
NOT TO SCALE

AVENUE 4 LANE,
PARALLELL PARKING

T-10.18

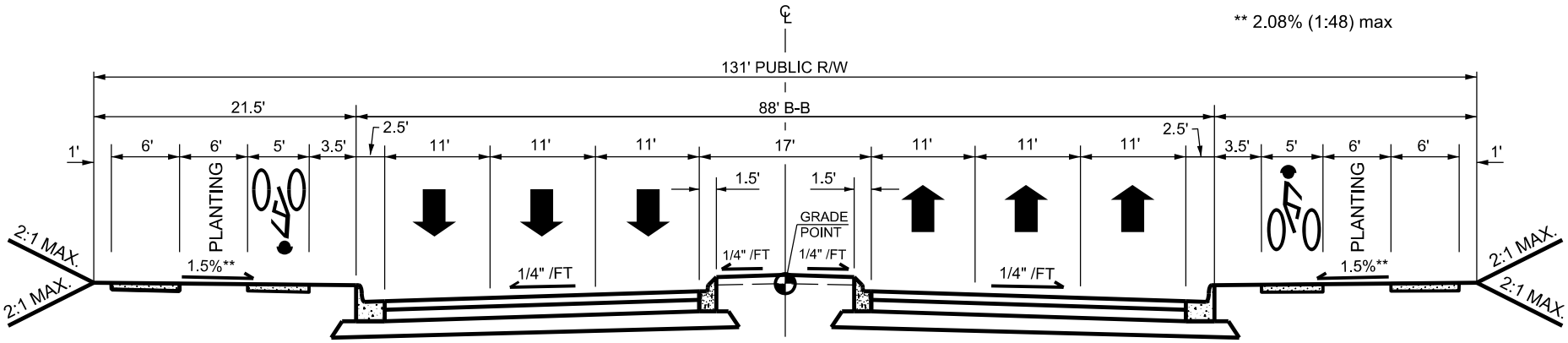

6 - LANE DIVIDED

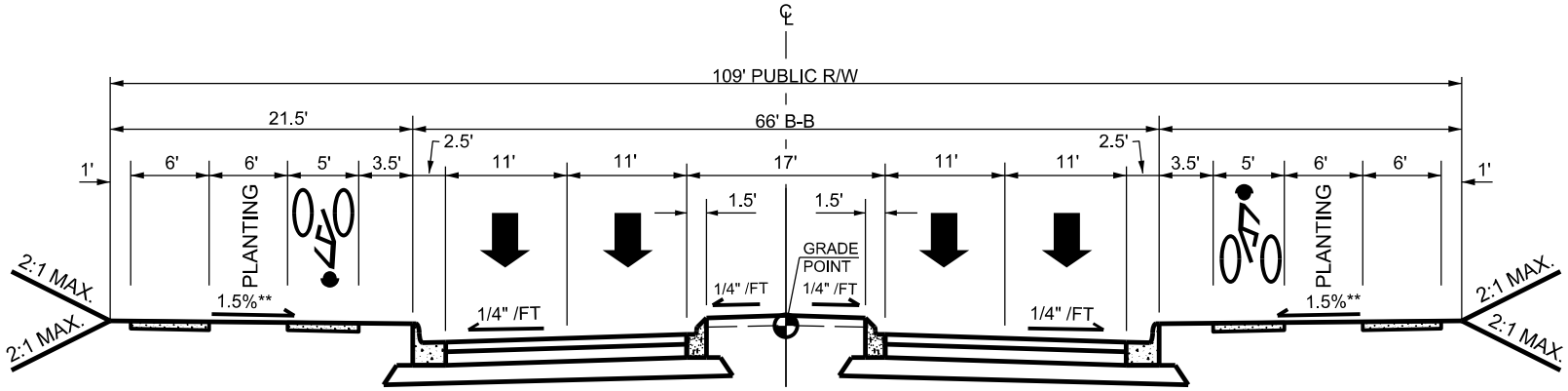

4 - LANE DIVIDED

NOTE

1. THE BIKE LANE MATERIAL SHALL BE BLACK-DYED CONCRETE, SEE T-30.01.2.

GENERAL	
WALKWAY TYPE	SIDEWALK
BIKEWAY TYPE	CURB-LEVEL BIKE LANE
PLANTING TYPE	TREE / LAWN
TREE SPACING	40' O.C. AVG
PARKING TYPE	NONE

STREET PAVEMENT DESIGN
3" S9.5B
4" I19.0B
10" ABC

CITY OF RALEIGH
STANDARD DETAIL

REVISIONS
DATE: 12/2022

DATE: 8/2020
NOT TO SCALE

AVENUE 4 LANE & 6 LANE, DIVIDED

T-10.19

PARALLEL PARKING

** 2.08% (1:48) max

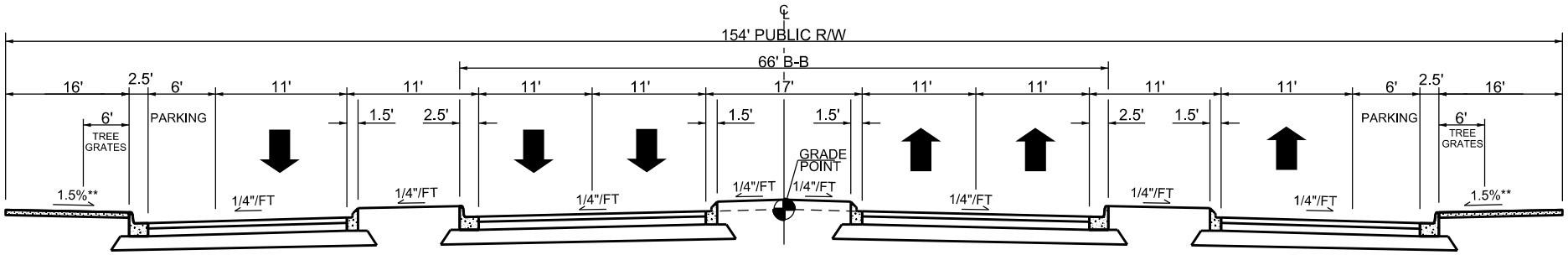

GENERAL	
WALKWAY TYPE	SIDEWALK BOTH SIDES
PLANTING TYPE	TREE GRATE / LAWN
TREE SPACING	40' O.C. AVG
PARKING TYPE	PARALLEL IN A ACCESS LANE

PAVEMENT DESIGN (4-LANES)
3" S9.5B
4" I19.0B
10" ABC

PAVEMENT DESIGN (ACCESS / PARKING)
3" S9.5B
3" I19.0B
8" ABC

ANGLED PARKING

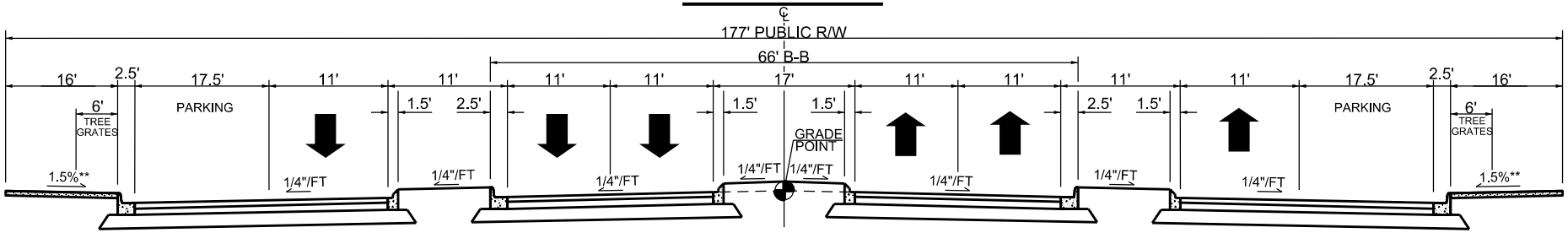

GENERAL	
WALKWAY TYPE	SIDEWALK BOTH SIDES
PLANTING TYPE	TREE GRATE / LAWN
TREE SPACING	40' O.C. AVG
PARKING TYPE	60^ ANGLE IN A ACCESS LANE

PAVEMENT DESIGN (4-LANES)
3" S9.5B
4" I19.0B
10" ABC

PAVEMENT DESIGN (ACCESS / PARKING)
3" S9.5B
3" I19.0B
8" ABC

CITY OF RALEIGH
STANDARD DETAIL

REVISIONS
DATE: 12/2022

DATE: 8/2020

MULTI-WAY BOULEVARD

NOT TO SCALE

T-10.20

** 2.08% (1:48) max

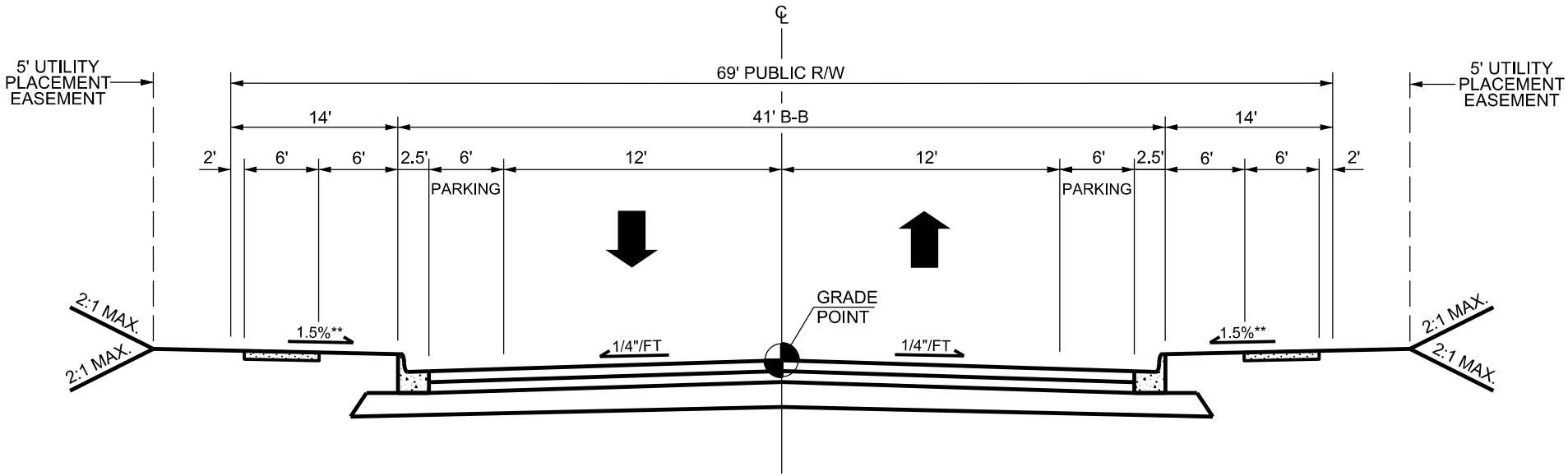

GENERAL	
WALKWAY TYPE	SIDEWALK BOTH SIDES
PLANTING TYPE	TREE/LAWN
TREE SPACING	40' O.C. AVG
PARKING TYPE	PARALLEL ON 2 SIDES

PAVEMENT DESIGN
3" S9.5B 3" I19.0B 8" ABC

CITY OF RALEIGH
STANDARD DETAIL

REVISIONS

DATE: 12/2022

DATE: 8/2020

NOT TO SCALE

INDUSTRIAL STREET

T-10.21

RESIDENTIAL

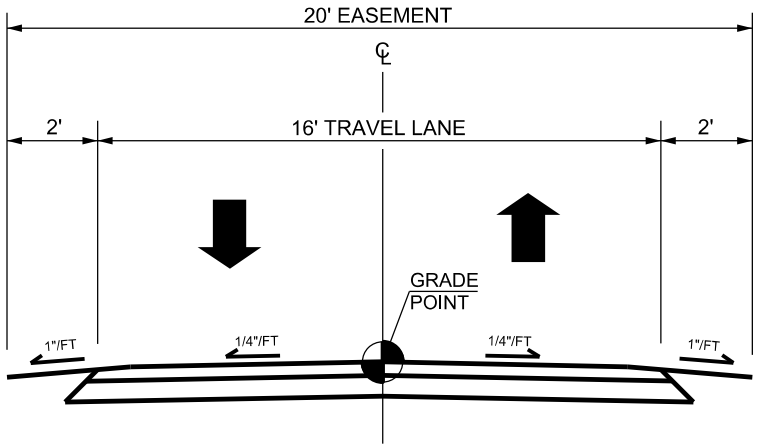

PAVEMENT DESIGN
3" SF9.5A 8" ABC

MIXED USE

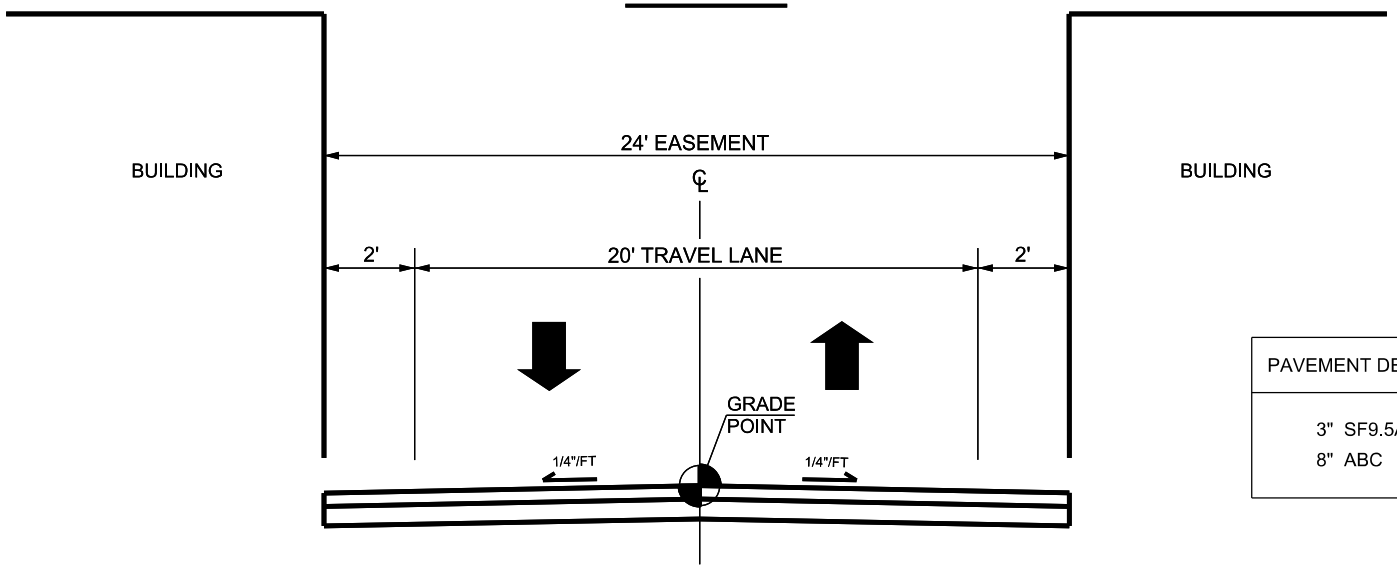

PAVEMENT DESIGN
3" SF9.5A 8" ABC

CITY OF RALEIGH
STANDARD DETAIL

REVISIONS

DATE: 8/2020

NOT TO SCALE

ALLEY

T-10.22

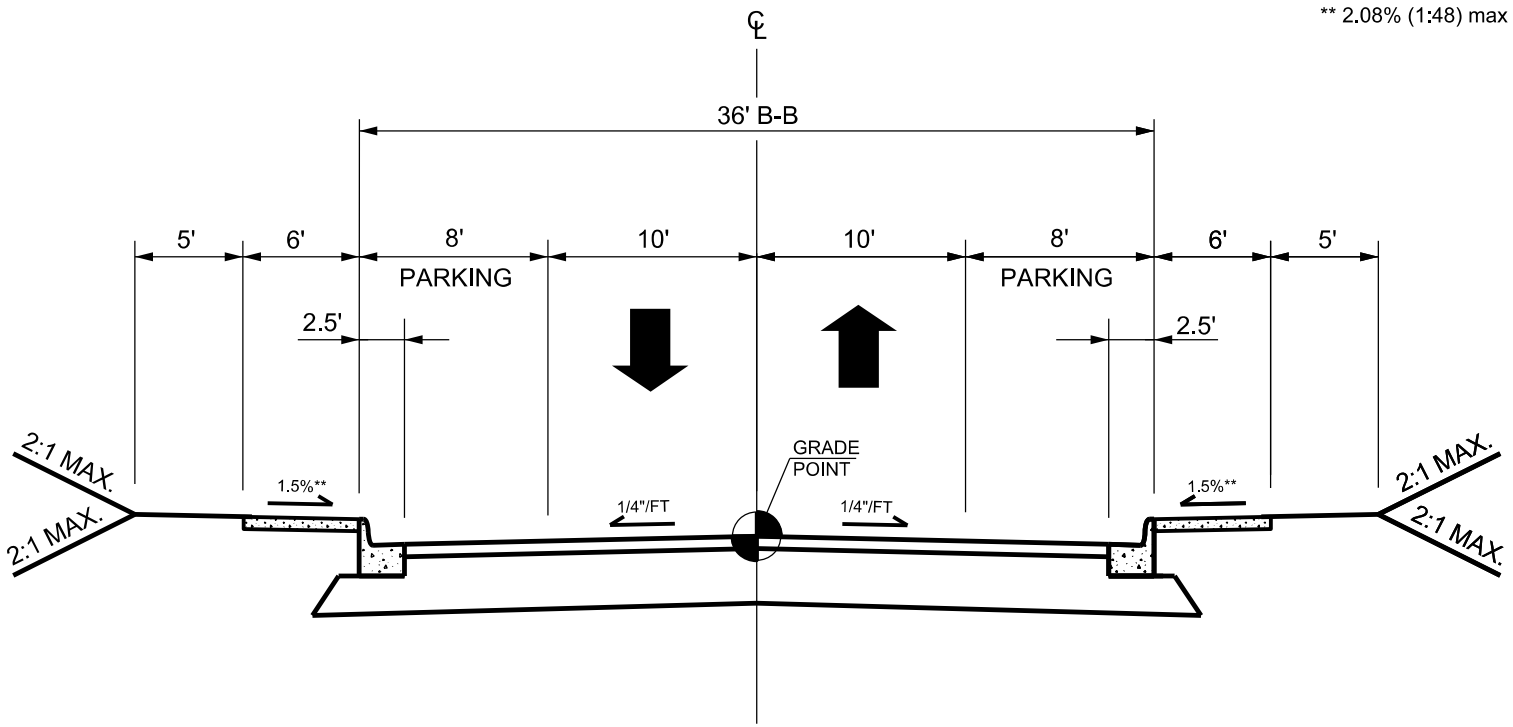

GENERAL	
WALKWAY TYPE	SIDEWALK
PARKING TYPE	PARALLEL ON 2 SIDES

PAVEMENT DESIGN
3" SF9.5A 8" ABC

CITY OF RALEIGH
STANDARD DETAIL

REVISIONS

DATE: 8/2020

NOT TO SCALE

DATE: 12/2022

PRIVATE ACCESSWAY
PRIMARY INTERNAL ACCESS DRIVE

T-10.23

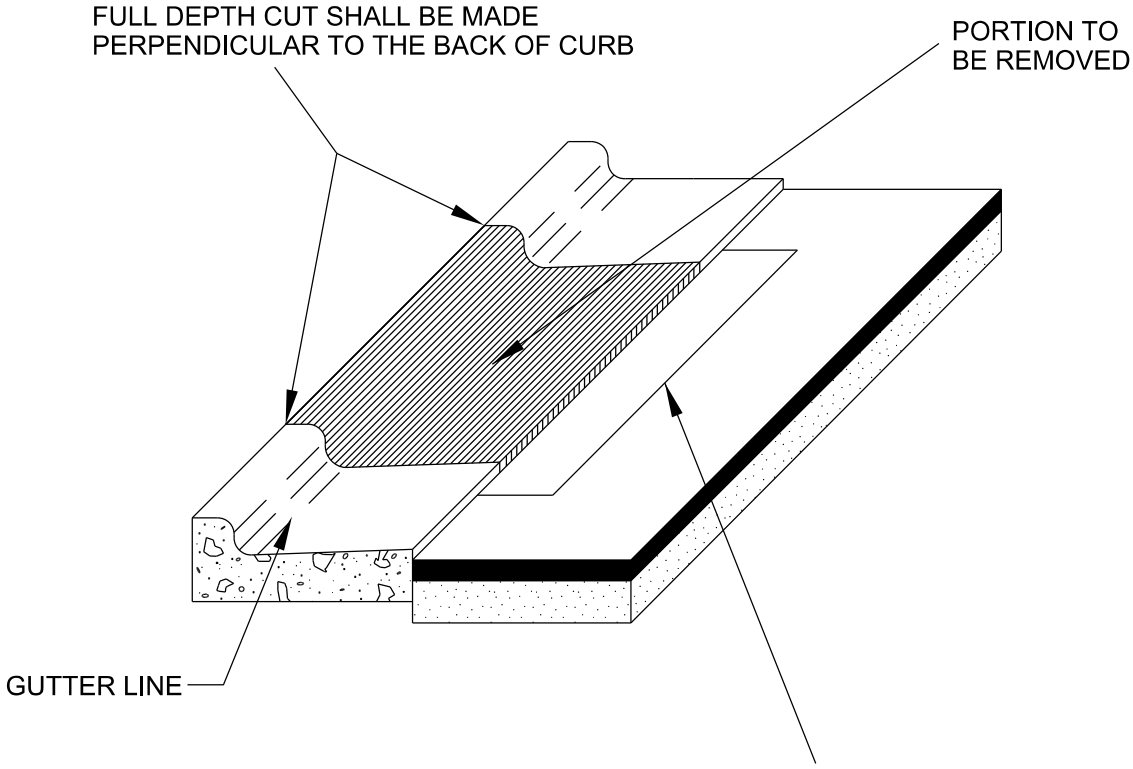

IF THE FINAL LIFT OF ASPHALT HAS BEEN INSTALLED AND IS DAMAGED DURING CURB REMOVAL, A ONE FOOT WIDE SECTION OF ASPHALT SHOULD BE SAWCUT AND REMOVED FOR FORMS TO BE USED TO KEEP A STRAIGHT EDGE ON THE DRIVEWAY APRON. REINSTALL HOT MIX SURFACE ASPHALT PATCH S9.5B.

IF THE FINAL LIFT OF ASPHALT HAS NOT BEEN INSTALLED, THE ASPHALT IN FRONT OF THE APRON CAN REMAIN IN PLACE.

NOTES:

1. CURB AND GUTTER SECTION SHALL BE REMOVED IN ACCORDANCE WITH DRIVEWAY WIDTH APPROVED BY THE CITY.
2. IF PERPENDICULAR CUT IS LESS THAN 5' FROM NEXT JOINT, THEN THE PARALLEL CUT SHALL BE MADE TO THAT JOINT.
3. THIS METHOD IS NOT ALLOWED IN NEW ROADWAY CONSTRUCTION.

CITY OF RALEIGH
STANDARD DETAIL

REVISIONS	DATE: 8/2020 NOT TO SCALE
	STANDARD METHOD OF REMOVING EXISTING CURB (FOR A DRIVEWAY APRON INSTALLATION)
	T-10.24

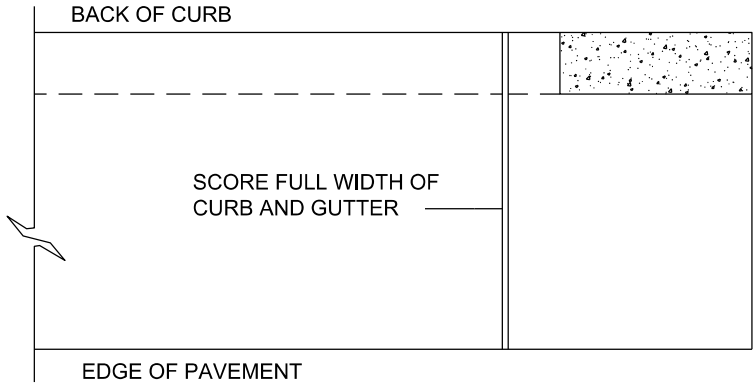

PLAN

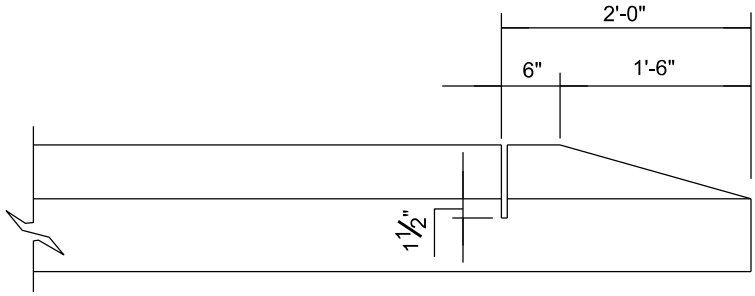

FRONT

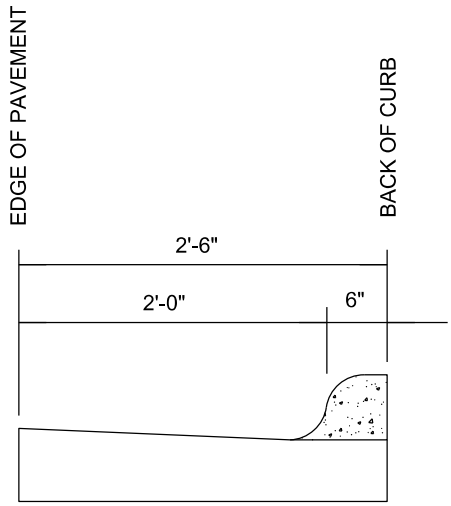

END

CITY OF RALEIGH
STANDARD DETAIL

REVISIONS	DATE: 8/2020 NOT TO SCALE
	STANDARD METHOD OF ENDING CURB AND GUTTER
	T-10.25

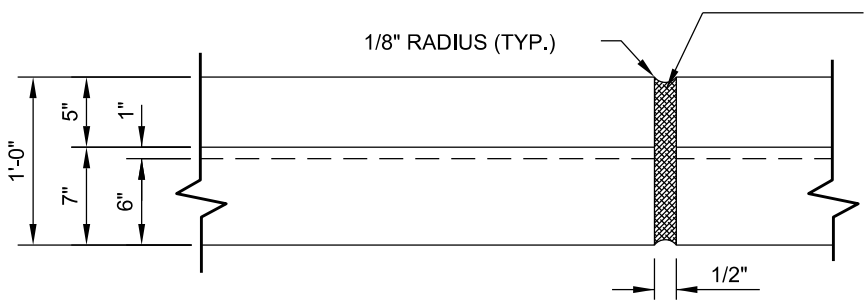

FRONT ELEVATION
TRANSVERSE EXPANSION JOINT

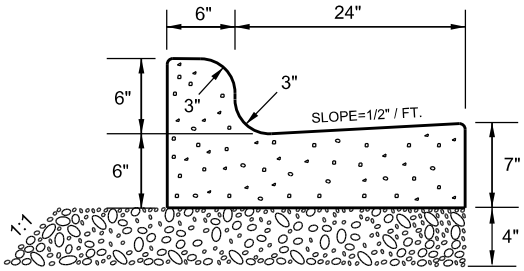

1. 30" CURB & GUTTER

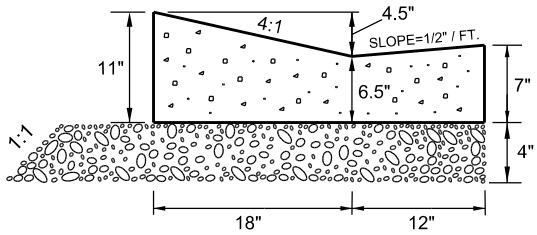

2. 30" VALLEY TYPE GUTTER

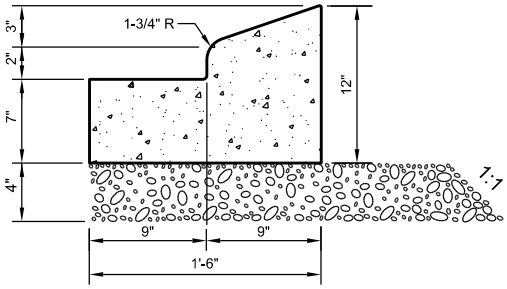

MEDIAN CURB AND GUTTER
SIDE ELEVATION

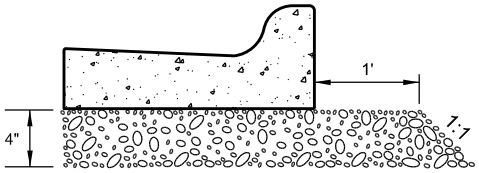

4" COMPACTED A.B.C. UNDER STANDARD CURB & GUTTER (MIN)

NO VALLEY CURB SHALL BE USED
AT INTERSECTIONS, HYDRANTS, ETC.

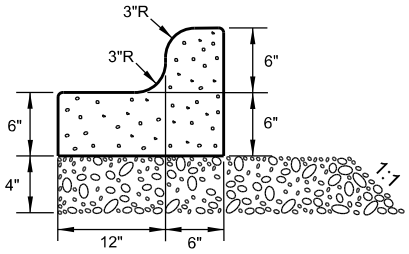

MEDIAN CURB AND GUTTER
(NON-MOUNTABLE)

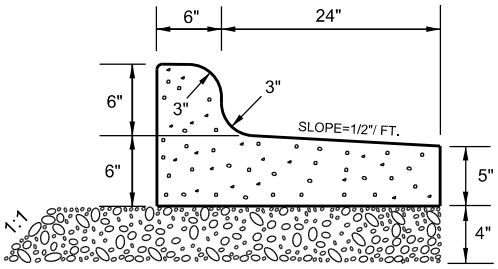

SPILL CURB DETAIL

NOTES:

1. 10' MAXIMUM BETWEEN DUMMY JOINTS.
   15' MAXIMUM BETWEEN DUMMY JOINTS ON MACHINE POURS.
2. 1/2" EXPANSION JOINT EVERY 50'.
3. 3000 PSI CONCRETE MINIMUM, 4" SLUMP MAXIMUM.
4. LIQUID MEMBRANE CURING COMPOUND SHALL MEET THE REQUIREMENTS OF SECTION 1026-2 OF NCDOT STANDARDS & SPECIFICATIONS FOR ROADS AND STRUCTURES.
5. ALL CONSTRUCTION JOINTS SHALL BE FILLED WITH JOINT FILLER AND SEALER IN ACCORDANCE WITH NCDOT ROADWAY STANDARD DETAIL 846.01 THE JOINT MATERIAL SHALL CONFORM TO SECTION 1028-2 OF NCDOT STANDARD & SPECIFICATIONS FOR ROADS AND STRUCTURES.
6. REFER TO NCDOT DETAIL 846.01 FOR CURB AND GUTTER SUPERELEVATION RATES.

CITY OF RALEIGH
STANDARD DETAIL

REVISIONS	DATE: 8/2020	NOT TO SCALE
	CURB AND GUTTER	
	T-10.26.1	

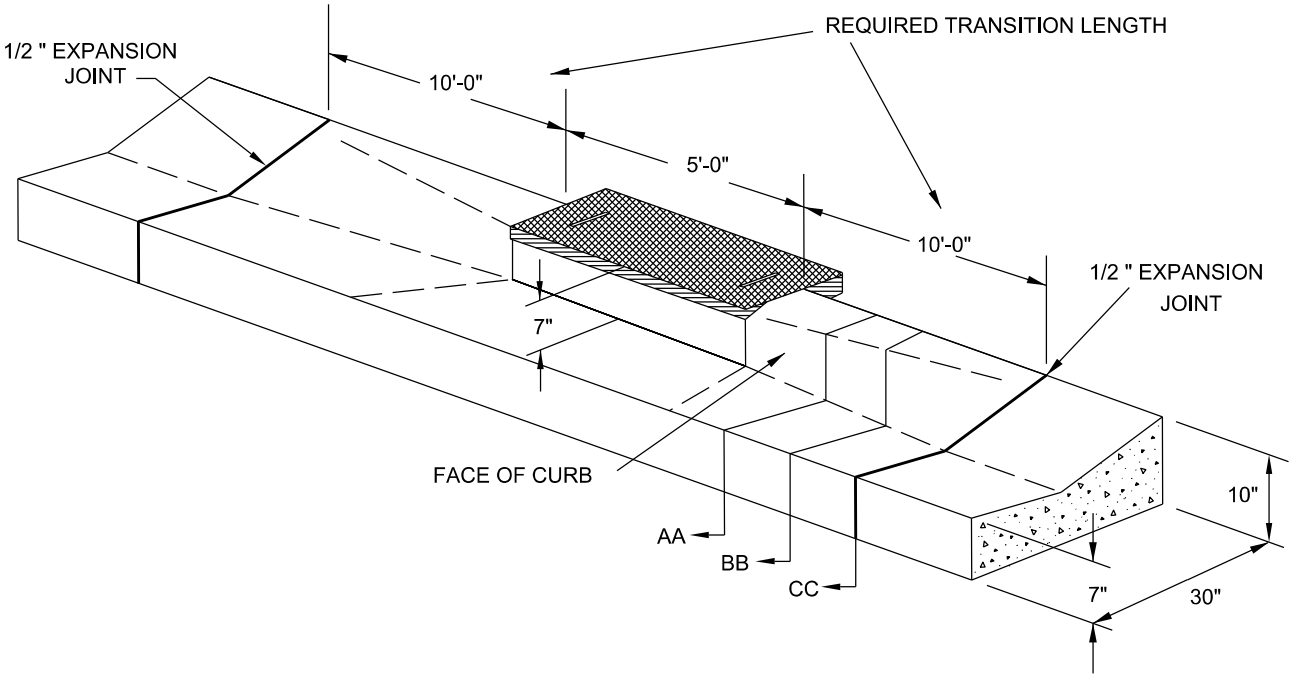

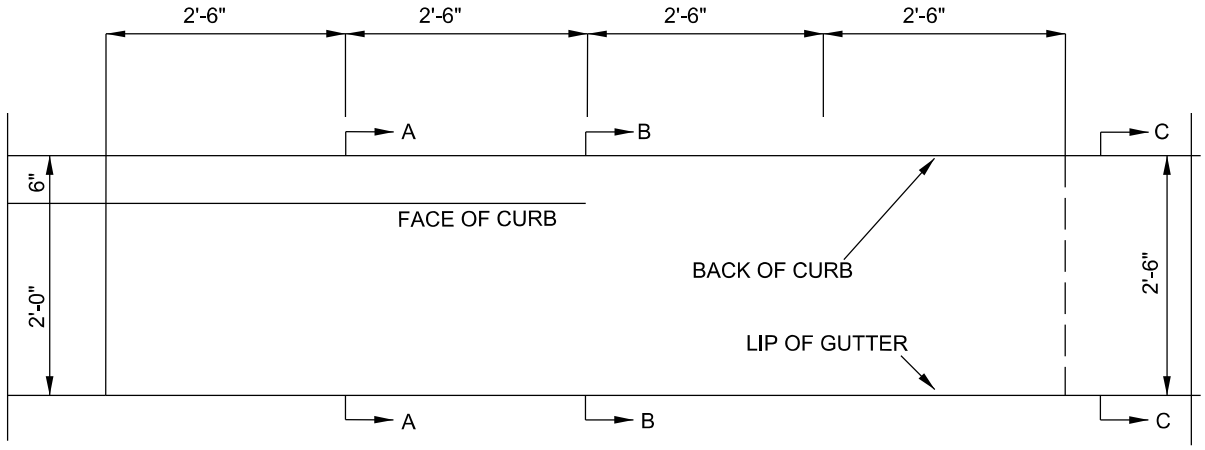

PLAN VEIW

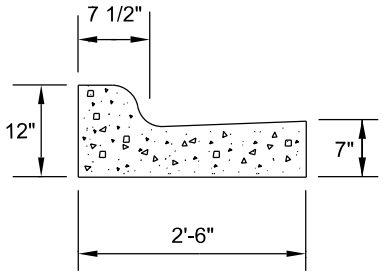

SECTION A-A

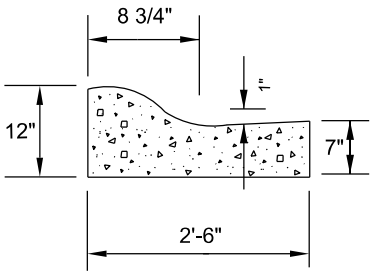

SECTION B-B

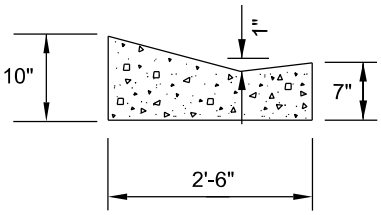

SECTION C-C

NOTES:
TRANSITION NOT TO BE LOCATED WITHIN THE CURB RADIUS.

CITY OF RALEIGH
STANDARD DETAIL

REVISIONS	DATE: 8/2020	NOT TO SCALE
	CURB TRANSITION TO 2'- 6" VALLEY GUTTER	
	T-10.26.2	

NOTES:

A. BOTTOM EDGE OF DELINEATOR SHALL BE 4 FEET ABOVE ROADWAY.
B. THE DELINEATOR STRIPES SHALL SLOPE UPWARD AND OUTWARD FROM TRAFFIC.
C. DELINEATORS TO BE SPACED ON CENTERS AT 1/3 OF THE DISTANCE 'X', SHOWN BELOW, FOR NEW ASPHALT WIDTHS ≤ 15 FEET OR AT 1/4 OF 'X' FOR NEW ASPHALT WIDTHS > 15 FEET.
D. DELINEATORS SHALL BE MOUNTED ON BREAKAWAY POSTS.
E. DELINEATORS SHALL BE REFLECTORIZED.
F. CALL 811 FOR UNDERGROUND UTILITY LOCATE PRIOR TO INSTALLATION.

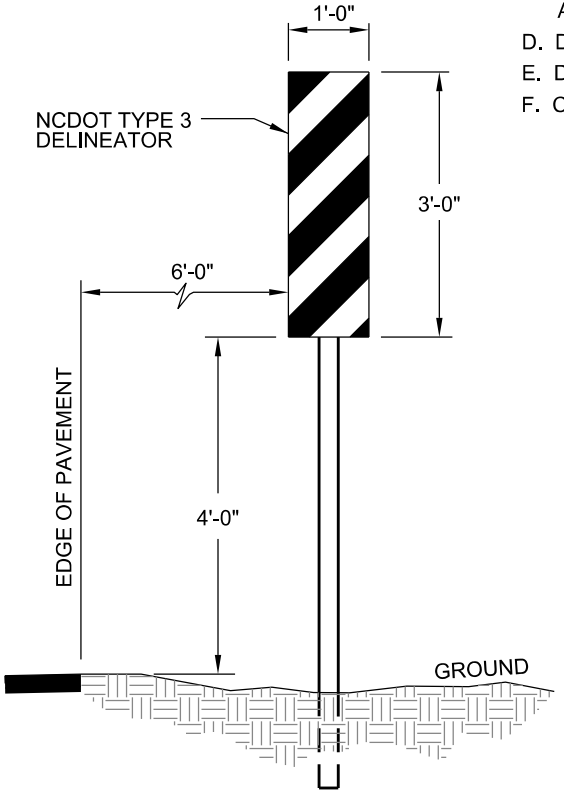

DETAIL

NOTES:

1. TAPER ON BOTH ENDS OF ROADWAY WIDENING SHALL BE A MINIMUM 2:1. THE TRANSPORTATION DIRECTOR OR DESIGNEE AND/OR **NCDOT** RESERVES THE RIGHT TO REQUIRE A LONGER TAPER IF DEEMED NECESSARY FOR THE SAFETY OF THE PUBLIC.
2. A SOLID WHITE EDGE MARKING SHALL BE EXTENDED ALONG WIDENING AT EXISTING PAVEMENT.
3. DELINEATORS SHALL ONLY BE REQUIRED AT TAPER FROM CURB TO EXISTING PAVEMENT IN DIRECTION OF TRAVEL.
4. DELINEATORS SHALL BE ORIENTED SUCH THAT THE FACE OF THE SIGN IS PERPENDICULAR TO TRAVEL LANE.

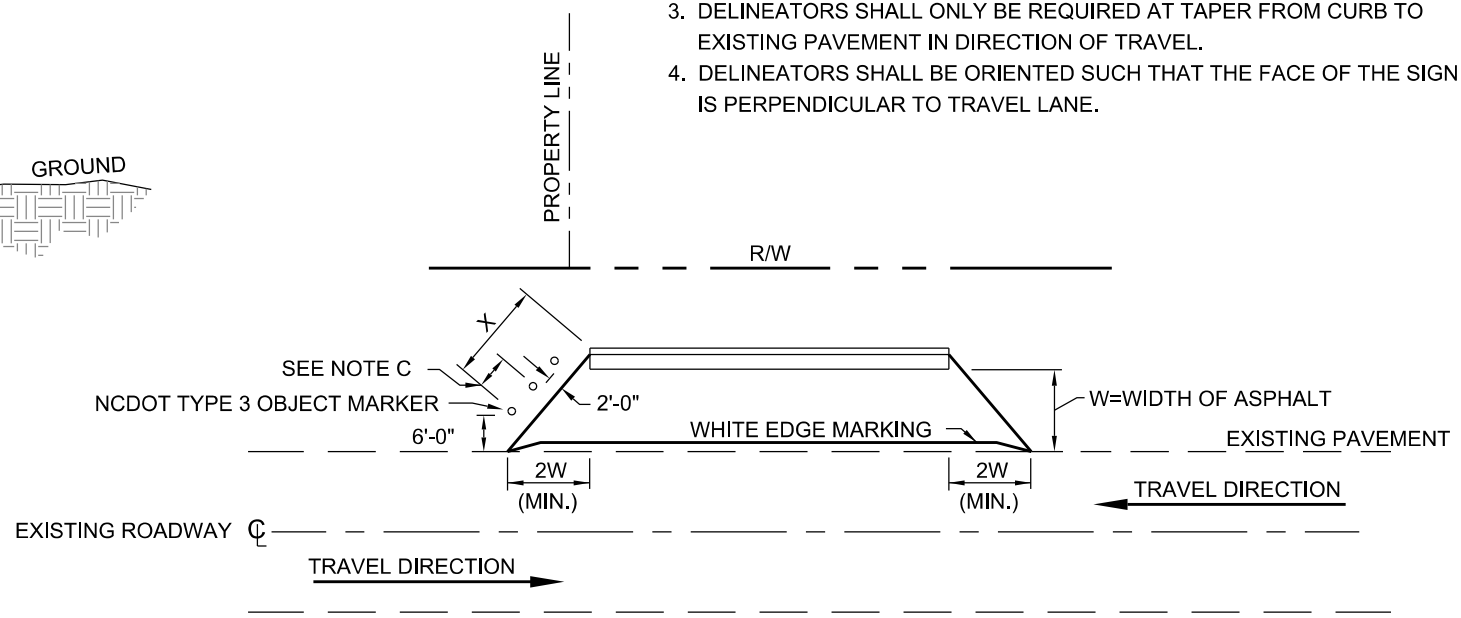

PLAN VIEW

CITY OF RALEIGH STANDARD DETAIL	REVISIONS
STANDARD PAVEMENT WIDENING TAPER & MARKINGS	DATE: 8/2020 NOT TO SCALE
T-10.27	

MAJOR STREET

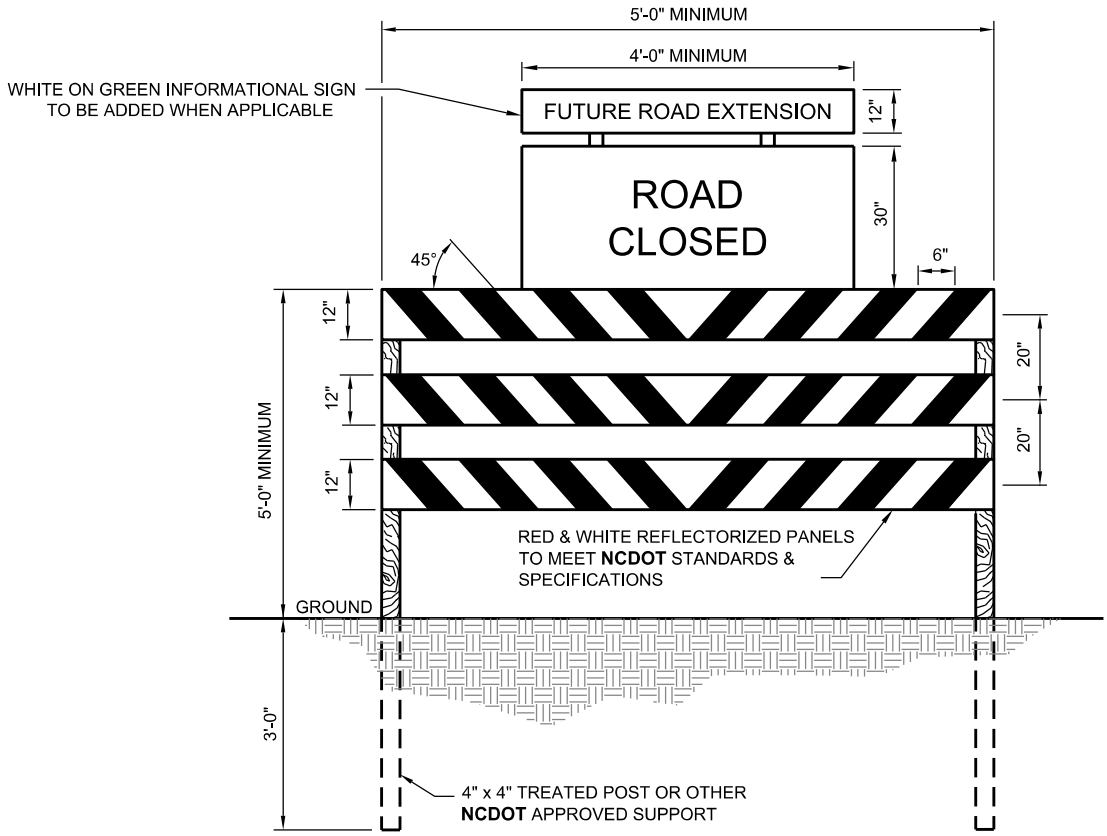

FOR USE AT FOUR LANE STREET AND ≥ 40 MPH, OTHERWISE THREE RED OBJECT MARKERS.

LOCAL & MIXED USE

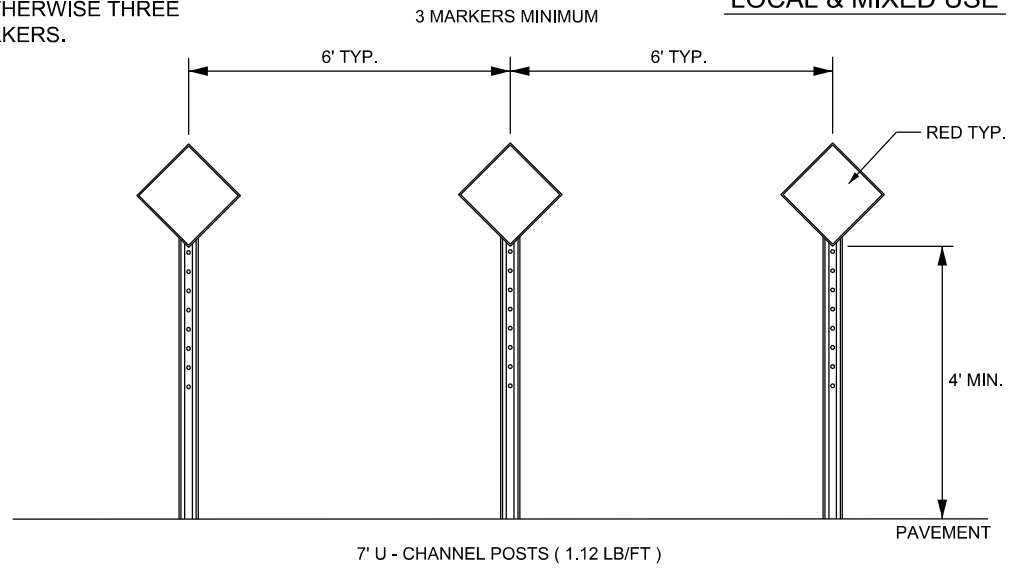

NOTES:

1. BARRICADE(S) TO BE ERECTED ACROSS ENTIRE ROADWAY INCLUDING CURB & GUTTER.
2. ADVANCE WARNING SIGN W14-1 (DEAD END) SHALL BE PLACED JUST AFTER LAST INTERSECTING STREET.
3. MARKINGS FOR BARRICADE RAILS SHALL BE REFLECTIVE AND ALTERNATE RED & WHITE STRIPS.
4. "ROAD CLOSED" SIGN SHALL MEET SPECIFICATIONS OF M.U.T.C.D. R11-2 AND BE REQUIRED ATOP EACH BARRICADE USED.
5. CALL 811 FOR UNDERGROUND UTILITY LOCATE PRIOR TO INSTALLATION.

CITY OF RALEIGH **STANDARD DETAIL**		
REVISIONS	*DATE: 8/2020*	*NOT TO SCALE*
	TEMPORARY BARRICADE FOR DEAD END ROADS	
	T-10.28	

CROSS SECTION

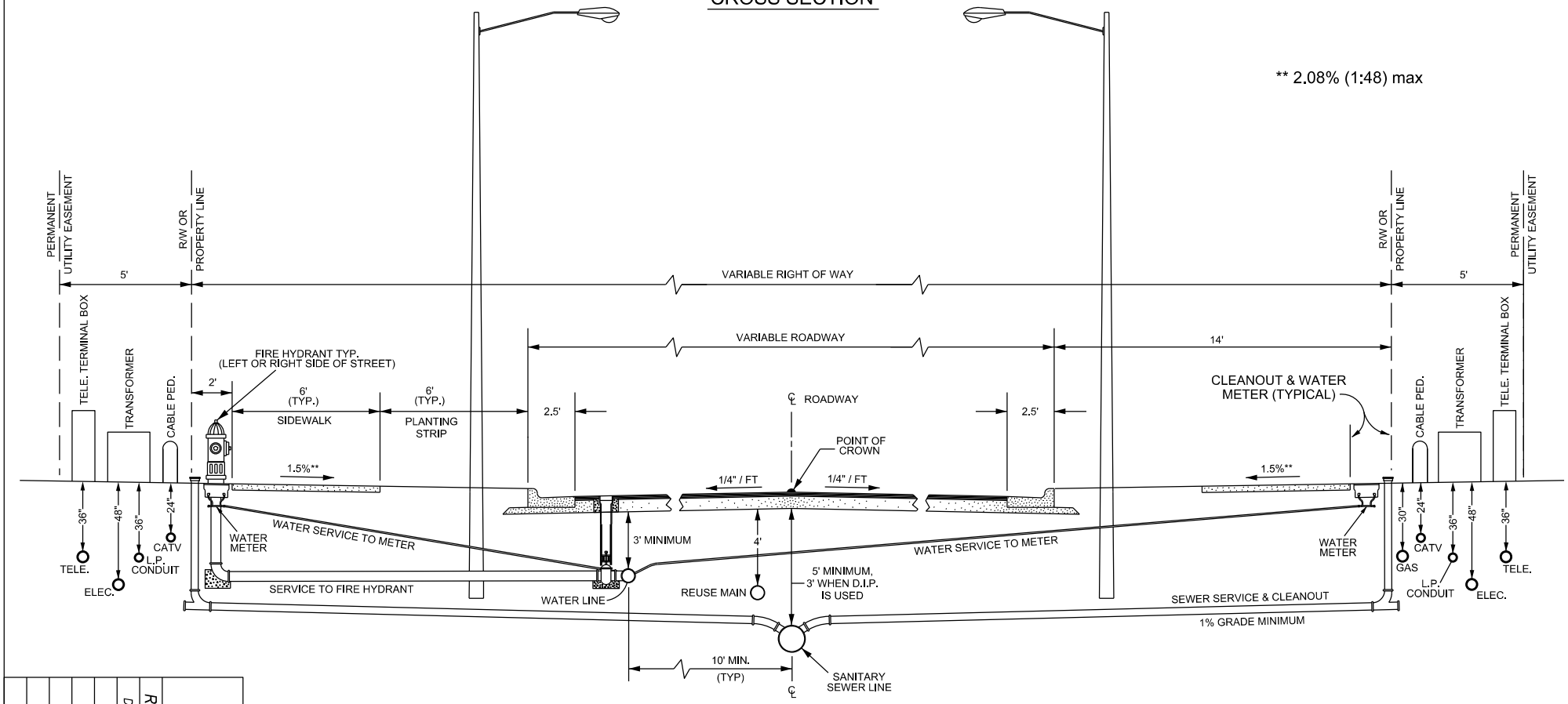

NOTES:

1. WATER AND/OR SANITARY SEWER LINES SHALL BE A MINIMUM OF TWO FEET FROM THE EDGE OF THE CURB AND GUTTER
2. ENCROACHMENT ONTO CITY MAINTAINED RIGHT OF WAY SHALL FOLLOW CONDITIONS OF THE APPLICABLE ENCROACHMENT AGREEMENT OR FRANCHISE AGREEMENT.
3. FOR HYDRANT LOCATION SEE PUBLIC UTILITIES STANDARD DETAIL W-4.
4. PUE TO BE EXPANDED ON A CASE BY CASE BASIS AS NEEDED TO ACCOMMODATE PRIVATE UTILITIES APPURTENANT FACILITIES AND EQUIPMENT.

CITY OF RALEIGH
STANDARD DETAIL

REVISIONS
DATE: 12/2022

DATE: 8/2020
NOT TO SCALE

STANDARD UTILITY LOCATIONS IN STREET

T-10.29

CROSS SECTION

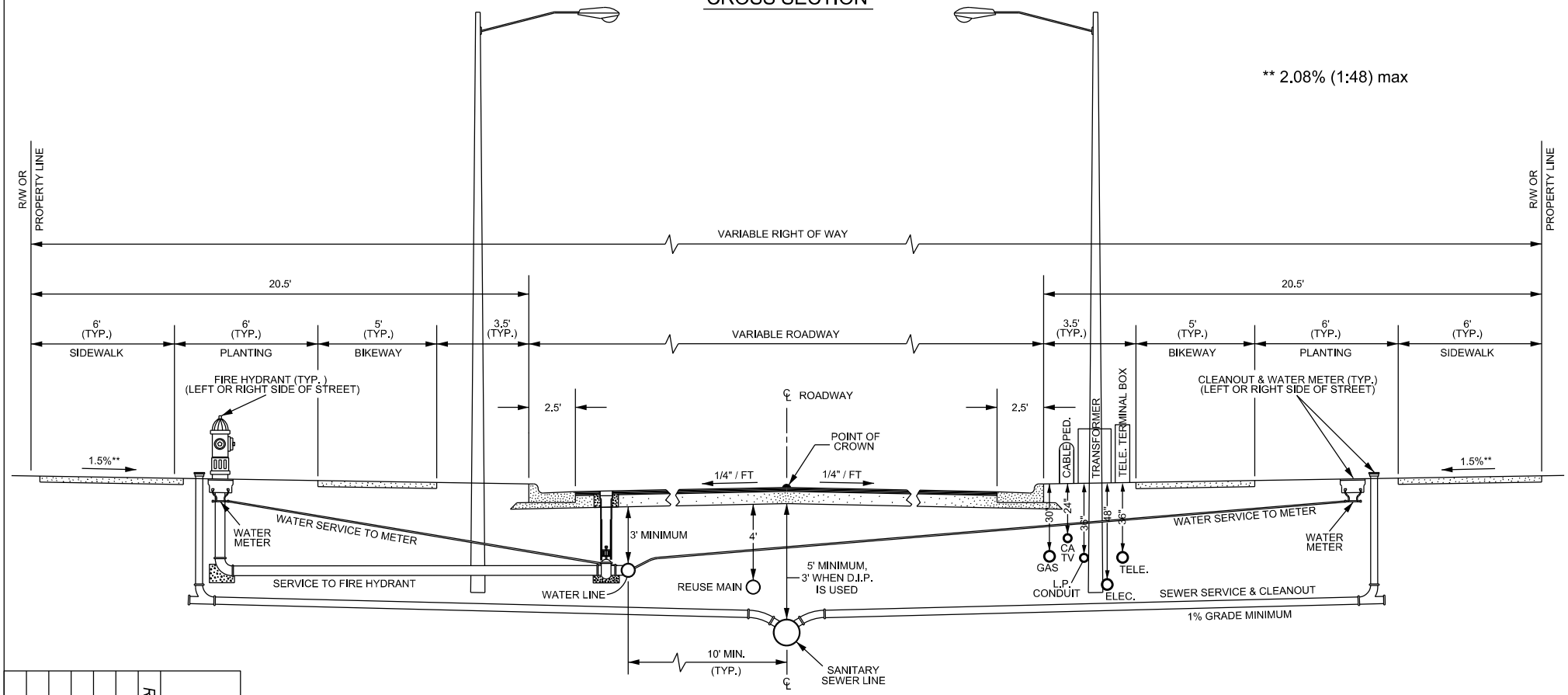

NOTES:

1. WATER AND/OR SANITARY SEWER LINES SHALL BE A MINIMUM OF TWO FEET FROM THE EDGE OF THE CURB AND GUTTER
2. ENCROACHMENT ONTO CITY MAINTAINED RIGHT OF WAY SHALL FOLLOW CONDITIONS OF THE APPLICABLE ENCROACHMENT AGREEMENT OR FRANCHISE AGREEMENT.
3. FOR HYDRANT LOCATION SEE PUBLIC UTILITIES STANDARD DETAIL W-4.
4. PUE TO BE EXPANDED ON A CASE BY CASE BASIS AS NEEDED TO ACCOMMODATE PRIVATE UTILITIES APPURTENANT FACILITIES AND EQUIPMENT.

CITY OF RALEIGH
STANDARD DETAIL

REVISIONS

DATE: 12/2022

NOT TO SCALE

STANDARD UTILITY LOCATIONS IN STREET WITH CURB-LEVEL BIKEWAY

T-10.30

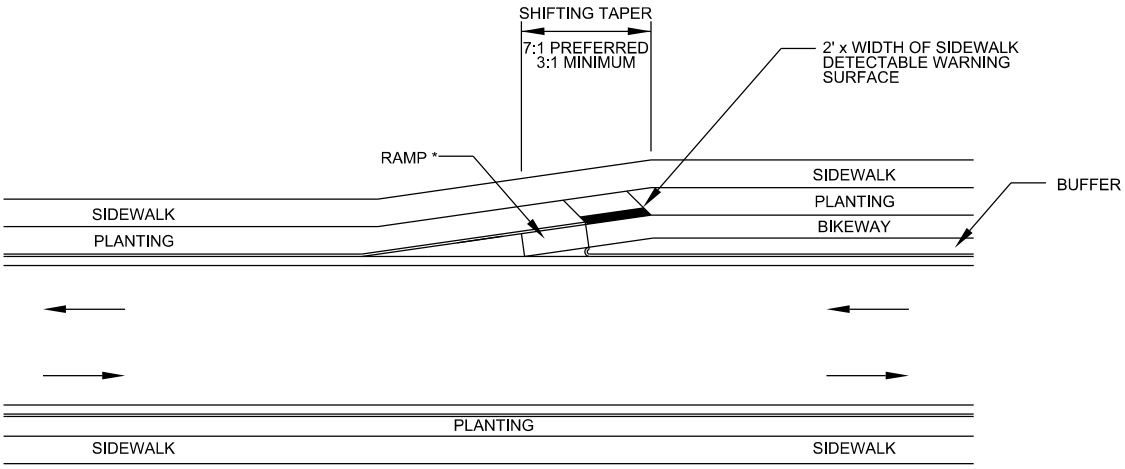

CURB-LEVEL BIKEWAY TO SHARED-LANE BIKEWAY WITH CURB & GUTTER

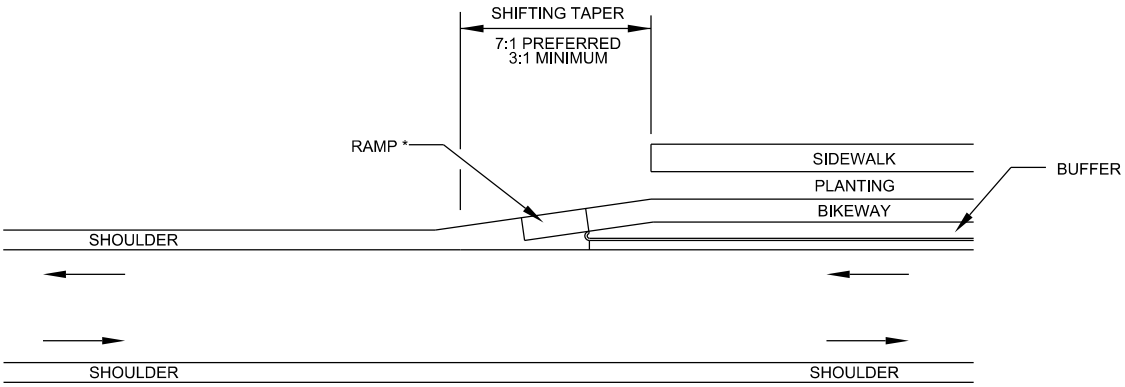

CURB-LEVEL BIKEWAY TO SHARED-LANE BIKEWAY WITHOUT CURB & GUTTER

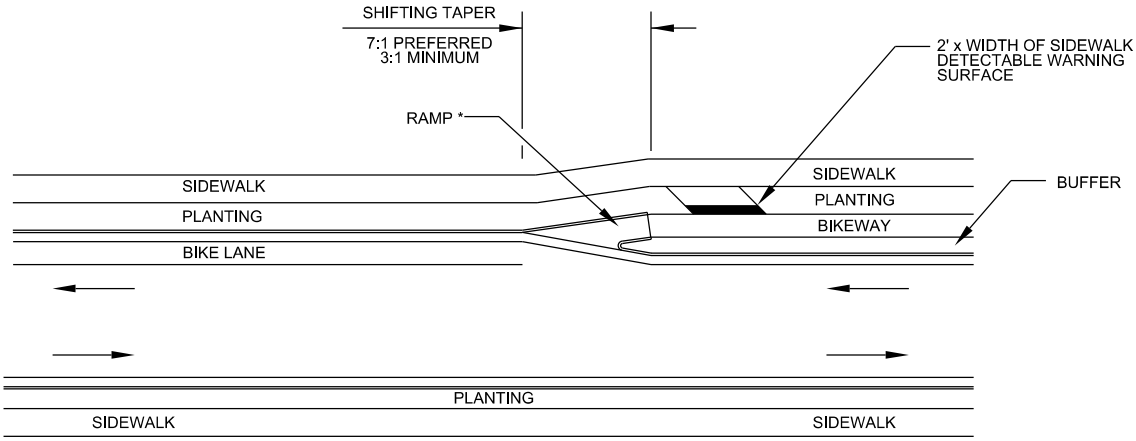

CURB-LEVEL BIKEWAY TO ON-STREET BIKEWAY

SHEET 1 OF 2

* SEE CITY OF RALEIGH STANDARD DETAIL T-20.01.1
TO DETERMINE APPROPRIATE RAMP TYPE

CITY OF RALEIGH
STANDARD DETAIL

REVISIONS	DATE: 08/2023	NOT TO SCALE
	CURB-LEVEL BIKEWAY TRANSITIONS	
	T-10.31.1	

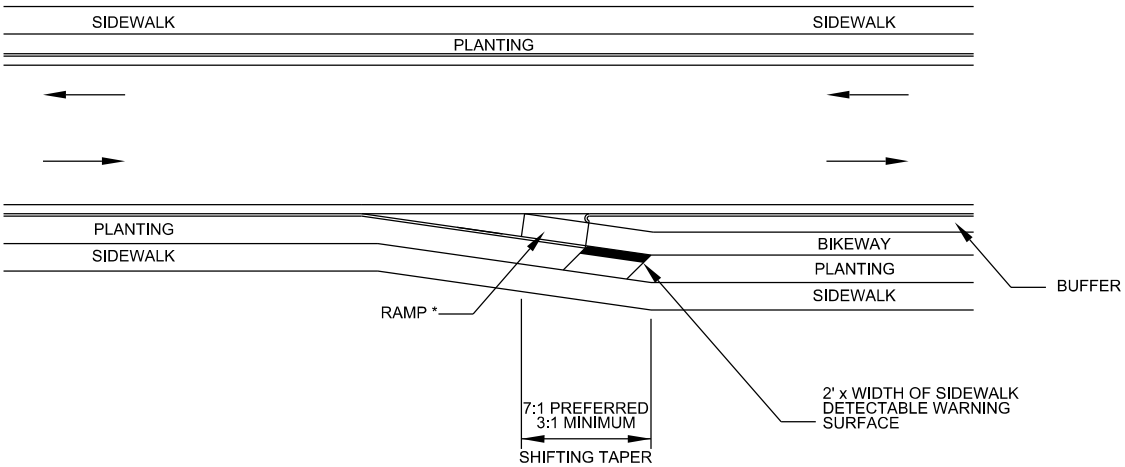

CURB-LEVEL BIKEWAY TO SHARED-LANE BIKEWAY WITH CURB & GUTTER

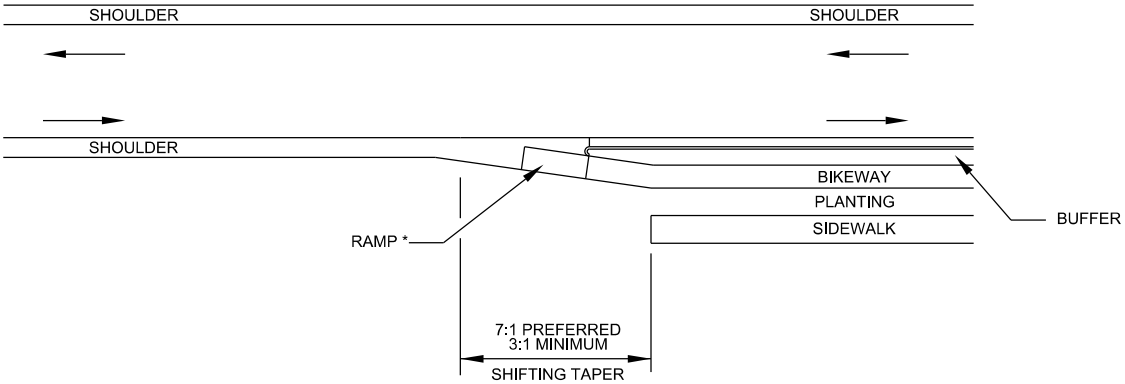

CURB-LEVEL BIKEWAY TO SHARED-LANE BIKEWAY WITHOUT CURB & GUTTER

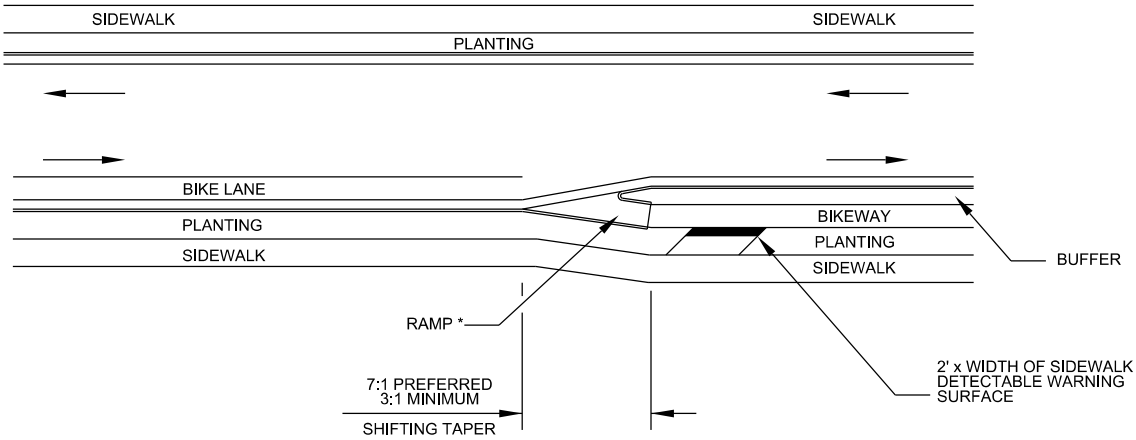

CURB-LEVEL BIKEWAY TO ON-STREET BIKEWAY

* SEE CITY OF RALEIGH STANDARD DETAIL T-20.01.1 TO DETERMINE APPROPRIATE RAMP TYPE

CITY OF RALEIGH
STANDARD DETAIL

REVISIONS	DATE: 08/2023	NOT TO SCALE
	CURB-LEVEL BIKEWAY TRANSITIONS	
	T-10.31.2	

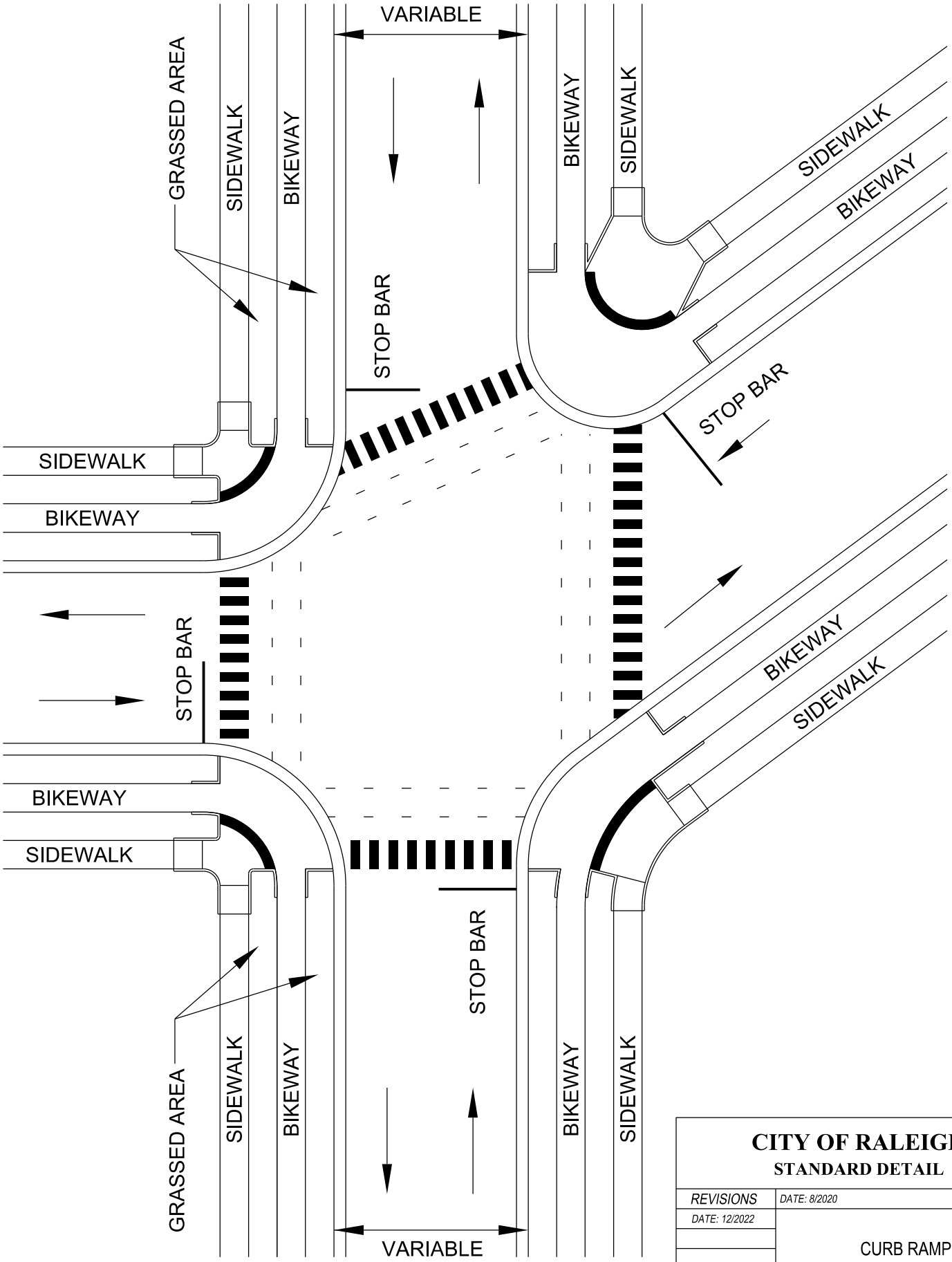

SHEET 1 OF 9

CITY OF RALEIGH

STANDARD DETAIL

REVISIONS	DATE: 8/2020	NOT TO SCALE
DATE: 12/2022	CURB RAMPS	
	T-20.01.1	

PAY LIMITS FOR CURB RAMP

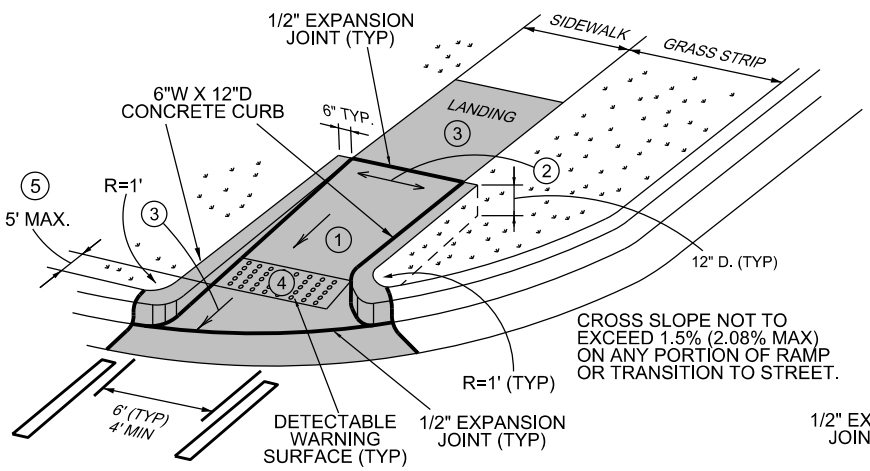

CONCRETE DEPTH	
RAMP / FLARE	6"
LANDING	4"

TYPE N-1 (CURB TYPE)

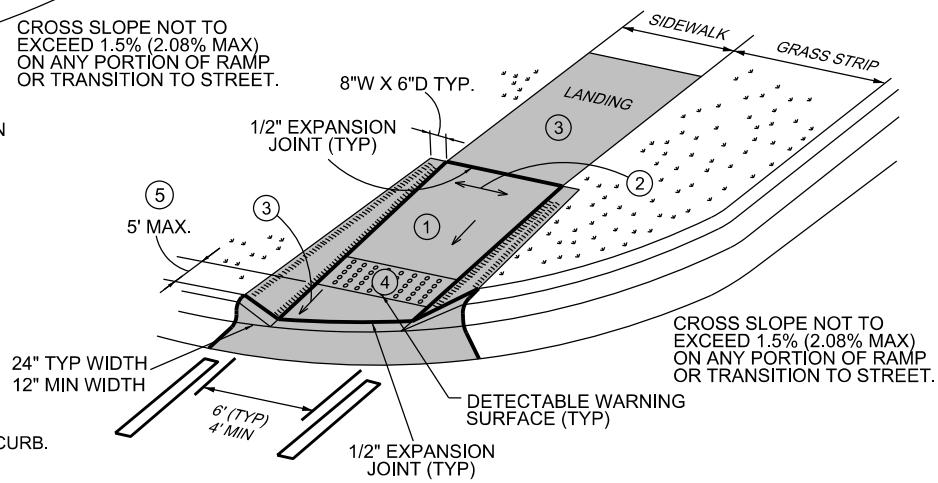

TYPE N-1A (FLARE TYPE)

NOTE: USE SMALL FLARES ONLY WHEN A CURB TYPE DIRECTLY CONFLICTS WITH APPROACHING VEHICULAR TURNING MOVEMENTS.

1. 7.5%; 8.33% (1:12) MAX RAMP SLOPE
2. 1.5%; 2.08% (1:48) MAX CROSS SLOPE
3. CURB RAMPS REQUIRE A (4'-0") MINIMUM LANDING WITH A MAXIMUM CROSS SLOPE AND LONGITUDINAL SLOPE OF 1.5% (2.08% MAX) WHERE PEDESTRIANS PERFORM TURNING MANEUVERS. SLOPE TO DRAIN TO CURB.
4. RAMPS AND DOMES SHALL BE INSTALLED THE SAME WIDTH AS THE SIDEWALK.
5. IF LENGTH EXCEEDS 5', TRUNCATED DOMES SHALL BE INSTALLED ALONG THE BACK OF THE CURB COVERING THE FULL WIDTH OF THE RAMP.

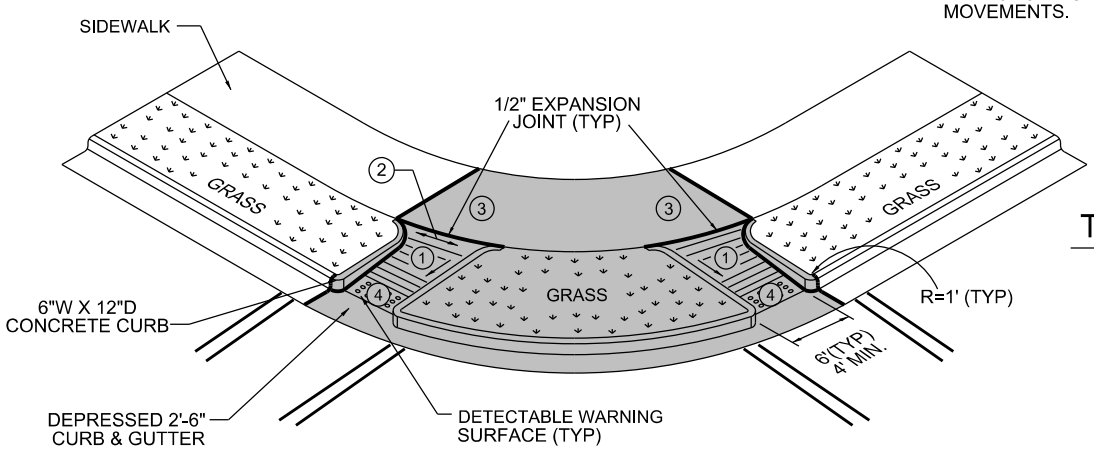

TYPE N-2 (RADIUS)

CONCRETE DEPTH	
RAMP / FLARE	6"
LANDING	4"

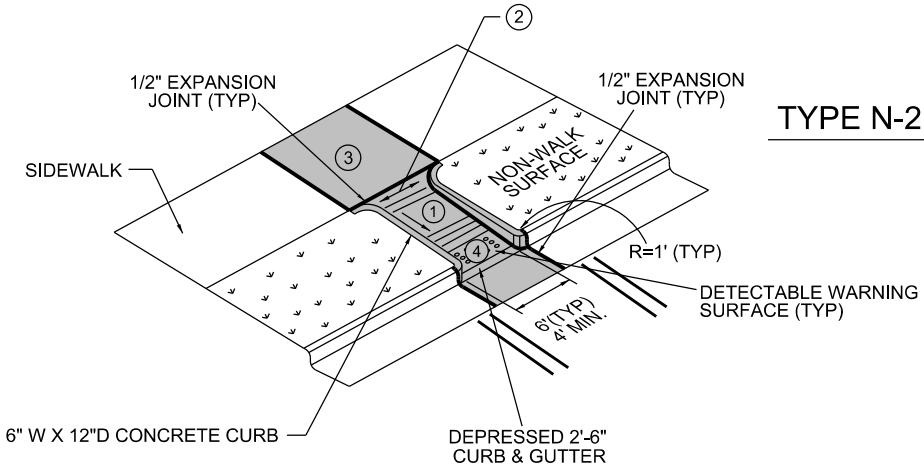

TYPE N-2 (TEE INTERSECTION)

SHEET 2 OF 9

CITY OF RALEIGH
STANDARD DETAIL

REVISIONS	DATE: 8/2020	NOT TO SCALE
DATE: 12/2022	CURB RAMPS (NEW DEVELOPMENT)	
	T-20.01.2	

PAY LIMITS FOR CURB RAMP

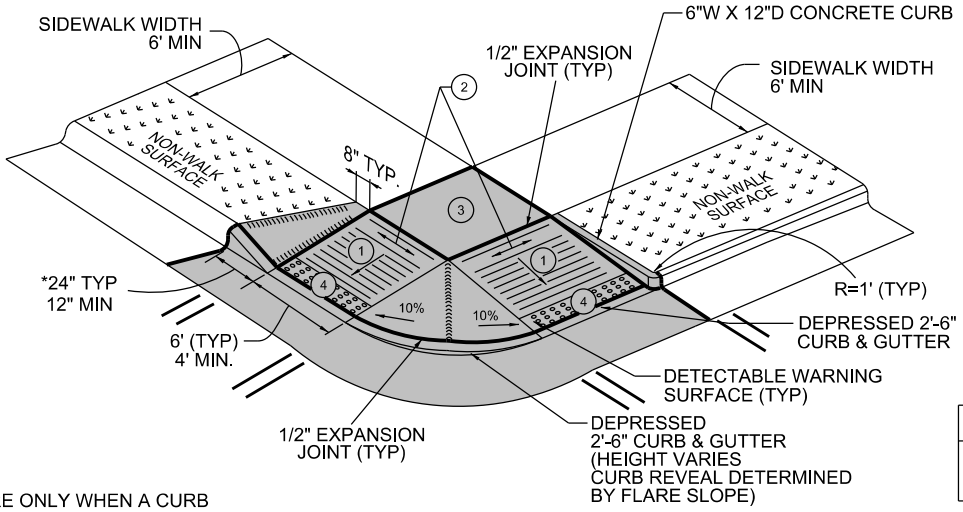

CONCRETE DEPTH	
RAMP / FLARE	6"
LANDING	4"

NOTE: * USE SMALL FLARE ONLY WHEN A CURB WOULD DIRECTLY CONFLICT WITH APPROACHING VEHICLE TURNING MOVEMENTS.

TYPE N-3

CROSS SLOPE NOT TO EXCEED 1.5% (2.08% MAX) ON ANY PORTION OF RAMP OR TRANSITION TO STREET.

1. 7.5%; 8.33% (1:12) MAX RAMP SLOPE
2. 1.5%; 2.08% (1:48) MAX CROSS SLOPE
3. CURB RAMPS REQUIRE A (4'-0") MINIMUM LANDING WITH A MAXIMUM CROSS SLOPE AND LONGITUDINAL SLOPE OF 1.5% (2.08% MAX) WHERE PEDESTRIANS PERFORM TURNING MANEUVERS. SLOPE TO DRAIN TO CURB.
4. RAMPS AND DOMES SHALL BE INSTALLED THE SAME WIDTH AS THE SIDEWALK.

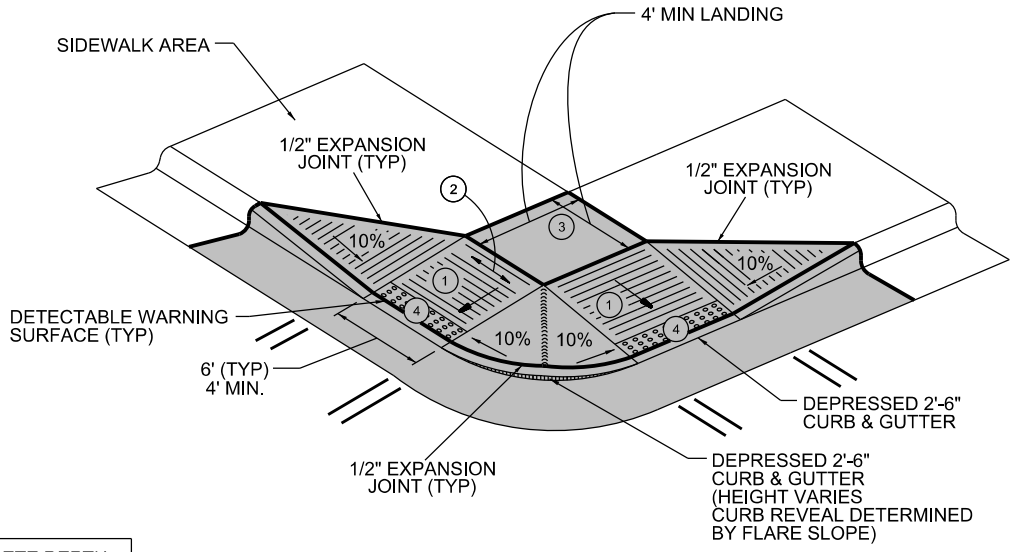

CONCRETE DEPTH	
RAMP / FLARE	6"
LANDING	4"

TYPE N-3A
(COMMERCIAL/RETAIL USE)

CITY OF RALEIGH
STANDARD DETAIL

REVISIONS	DATE: 8/2020	NOT TO SCALE
DATE: 12/2022	CURB RAMPS (NEW DEVELOPMENT)	
	T-20.01.3	

PAY LIMITS FOR CURB RAMP

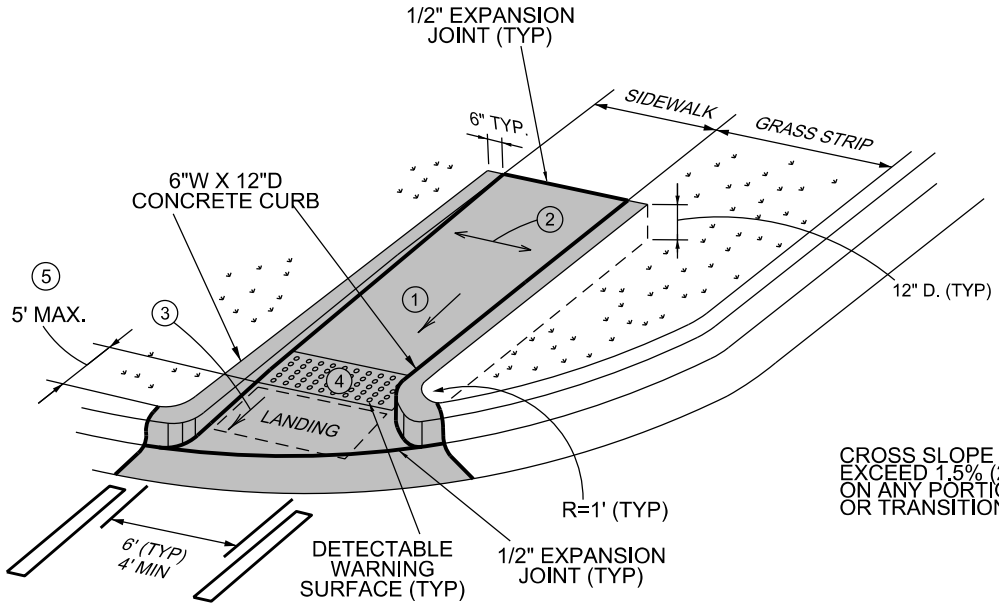

CROSS SLOPE NOT TO EXCEED 1.5% (2.08% MAX) ON ANY PORTION OF RAMP OR TRANSITION TO STREET.

TYPE N-4

1. 7.5%; 8.33% (1:12) MAX RAMP SLOPE
2. 1.5%; 2.08% (1:48) MAX CROSS SLOPE
3. CURB RAMPS REQUIRE A (4'-0") MINIMUM LANDING WITH A MAXIMUM CROSS SLOPE AND LONGITUDINAL SLOPE OF 1.5% (2.08% MAX) WHERE PEDESTRIANS PERFORM TURNING MANEUVERS. SLOPE TO DRAIN TO CURB.
4. RAMPS AND DOMES SHALL BE INSTALLED THE SAME WIDTH AS THE SIDEWALK.
5. IF LENGTH EXCEEDS 5', TRUNCATED DOMES SHALL BE INSTALLED ALONG THE BACK OF THE CURB COVERING THE FULL WIDTH OF THE RAMP.

CONCRETE DEPTH	
RAMP	6"
LANDING	4"

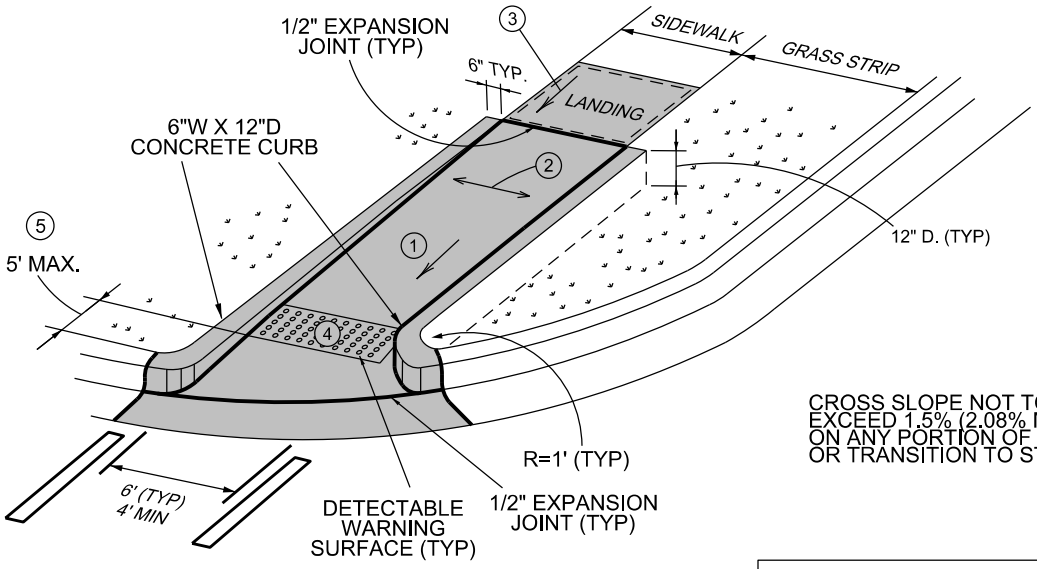

CROSS SLOPE NOT TO EXCEED 1.5% (2.08% MAX) ON ANY PORTION OF RAMP OR TRANSITION TO STREET.

TYPE N-4A

SHEET 4 OF 9

CITY OF RALEIGH
STANDARD DETAIL

REVISIONS	DATE: 8/2020	NOT TO SCALE
DATE: 12/2022	CURB RAMPS (NEW DEVELOPMENT)	
	T-20.01.4	

PAY LIMITS FOR CURB RAMP

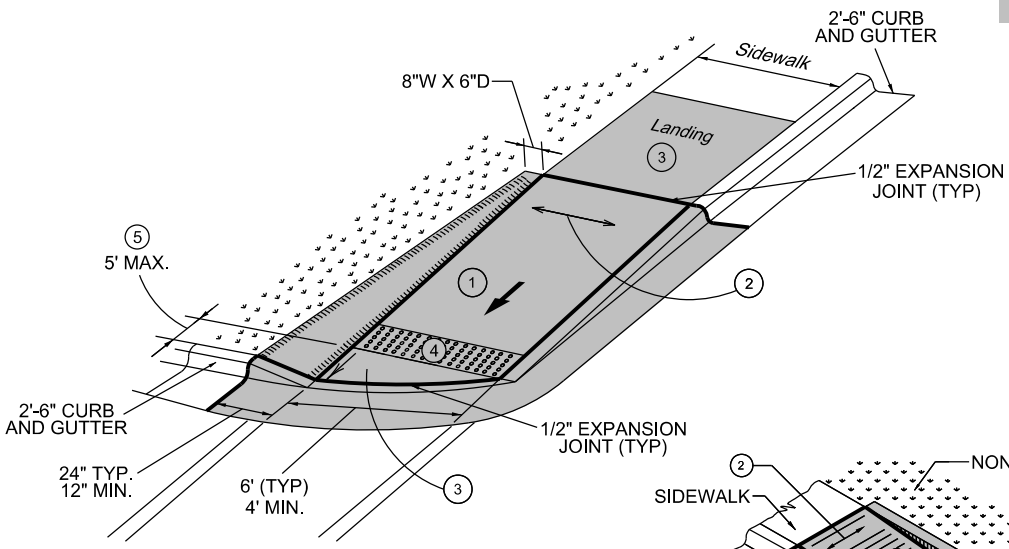

TYPE R-1

CONCRETE DEPTH	
RAMP / FLARES	6"
LANDING	4"

CROSS SLOPE NOT TO EXCEED 1.5% (2.08% MAX) ON ANY PORTION OF RAMP OR TRANSITION TO STREET.

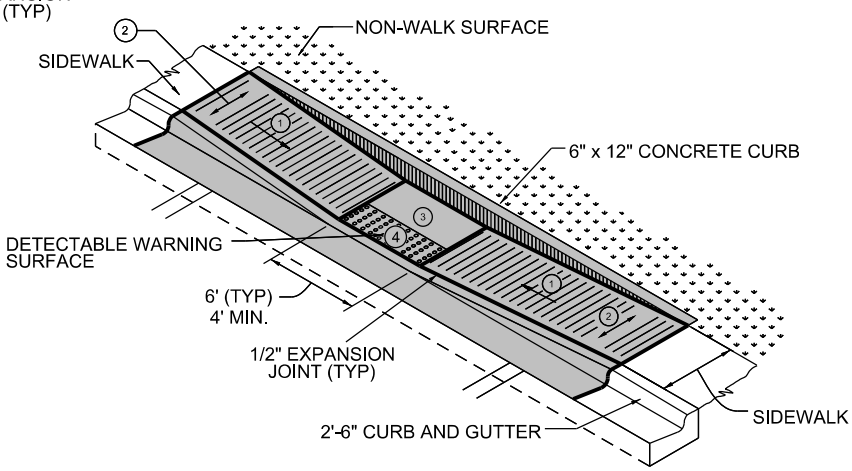

TYPE R-2

(USE ONLY WHERE WATER WILL NOT POND WITHIN LANDING)

1. 7.5%; 8.33% (1:12) MAX RAMP SLOPE
2. 1.5%; 2.08% (1:48) MAX CROSS SLOPE
3. CURB RAMPS REQUIRE A (4'-0") MINIMUM LANDING WITH A MAXIMUM CROSS SLOPE AND LONGITUDINAL SLOPE OF 1.5% (2.08% MAX) WHERE PEDESTRIANS PERFORM TURNING MANEUVERS. SLOPE TO DRAIN TO CURB.
4. RAMPS AND DOMES SHALL BE INSTALLED THE SAME WIDTH AS THE SIDEWALK.
5. IF LENGTH EXCEEDS 5', TRUNCATED DOMES SHALL BE INSTALLED ALONG THE BACK OF THE CURB COVERING THE FULL WIDTH OF THE RAMP.

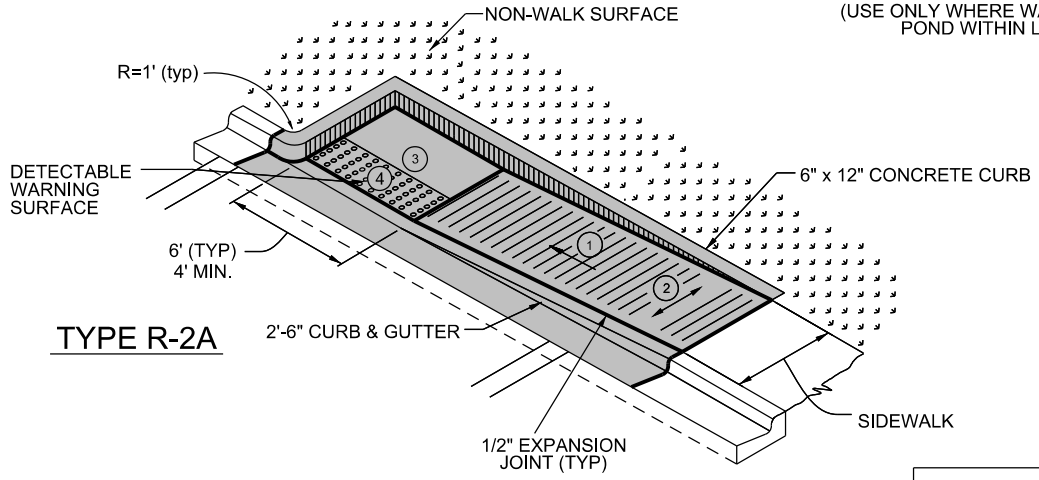

TYPE R-2A

CONCRETE DEPTH	
RAMP / FLARES	6"
LANDING	4"

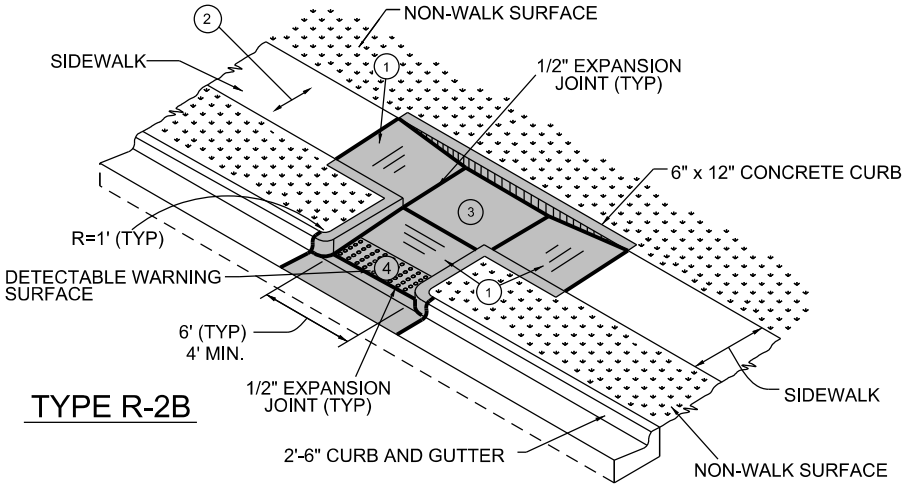

TYPE R-2B

SHEET 5 OF 9

CITY OF RALEIGH
STANDARD DETAIL

REVISIONS	DATE: 8/2020	NOT TO SCALE
DATE: 12/2022	CURB RAMPS (RETROFIT)	
	T-20.01.5	

PAY LIMITS FOR CURB RAMP

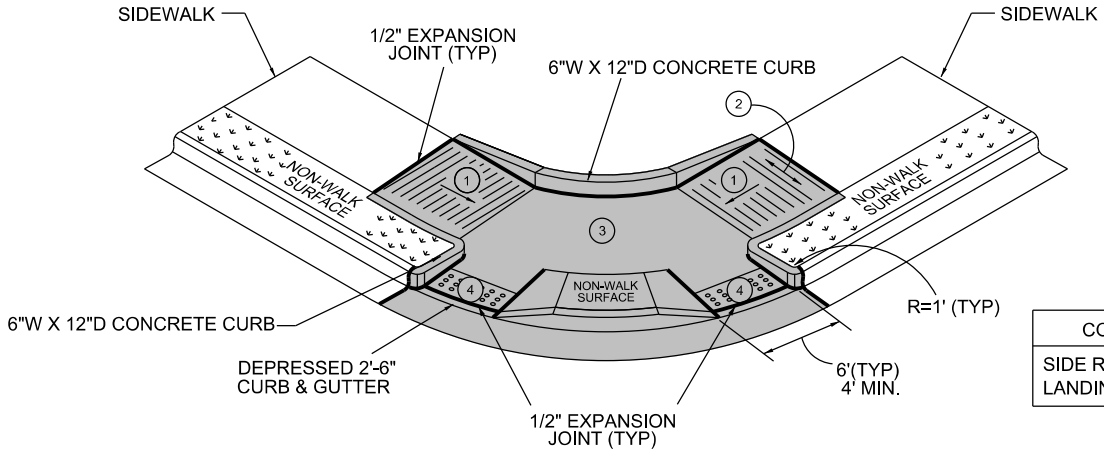

CONCRETE DEPTH	
SIDE RAMPS	4"
LANDING & OPENINGS	6"

TYPE R-3

CROSS SLOPE NOT TO EXCEED 1.5% (2.08% MAX) ON ANY PORTION OF RAMP OR TRANSITION TO STREET.

1. 7.5%; 8.33% (1:12) MAX RAMP SLOPE
2. 1.5%; 2.08% (1:48) MAX CROSS SLOPE
3. CURB RAMPS REQUIRE A (4'-0") MINIMUM LANDING WITH A MAXIMUM CROSS SLOPE AND LONGITUDINAL SLOPE OF 1.5% (2.08% MAX) WHERE PEDESTRIANS PERFORM TURNING MANEUVERS. SLOPE TO DRAIN TO CURB.
4. RAMPS AND DOMES SHALL BE INSTALLED THE SAME WIDTH AS THE SIDEWALK.

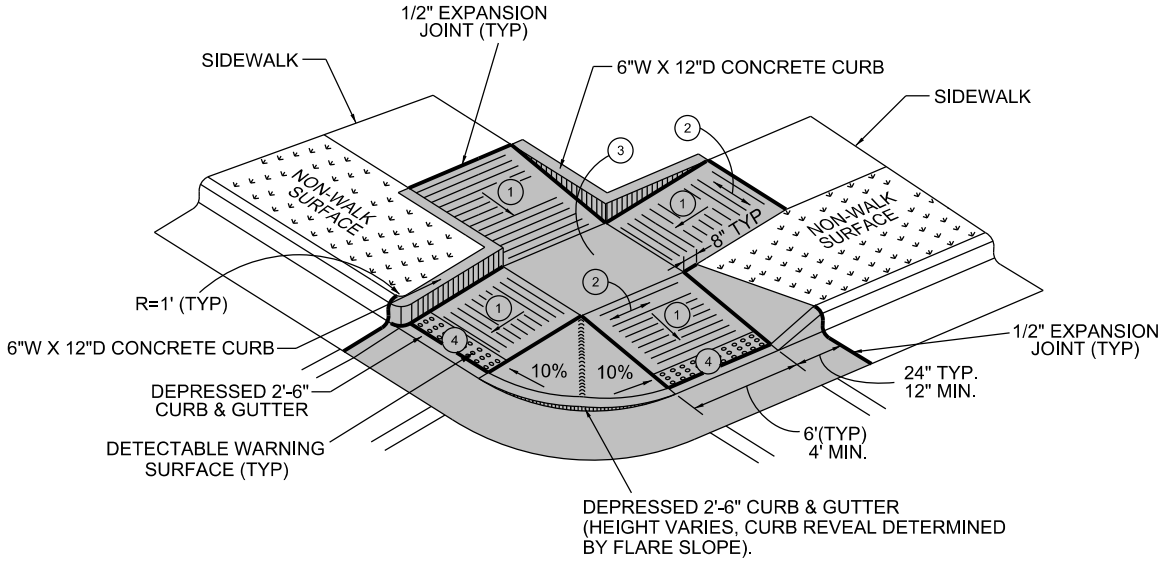

CONCRETE DEPTH	
SIDE RAMPS	4"
LANDING & CURB RAMPS	6"

TYPE R-4

CITY OF RALEIGH
STANDARD DETAIL

REVISIONS	DATE: 8/2020	NOT TO SCALE
DATE: 12/2022	CURB RAMPS (RETROFIT)	
	T-20.01.6	

PAY LIMITS FOR CURB RAMP

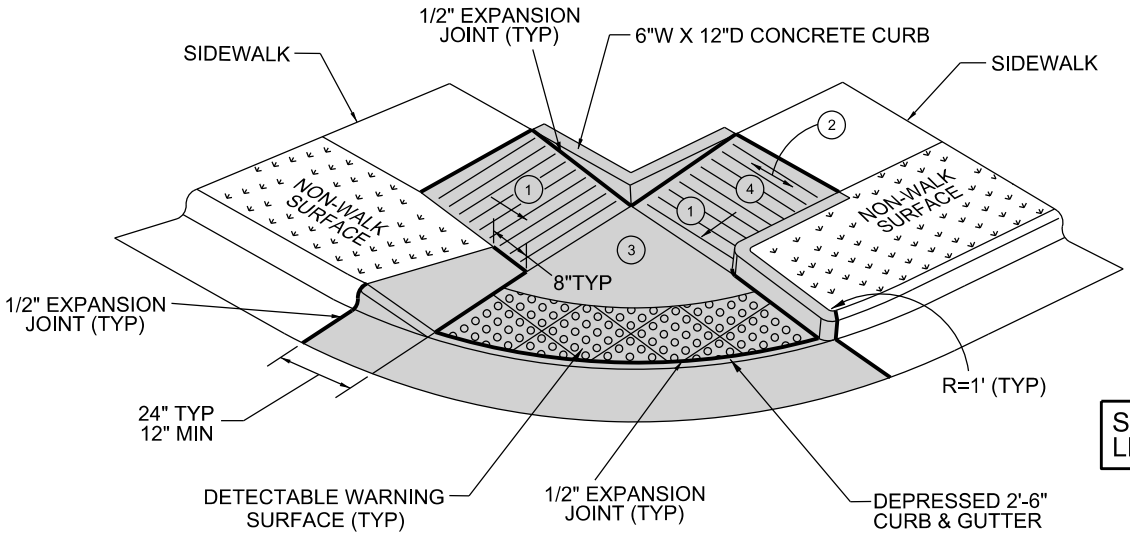

SMALL RADIUS LESS THAN 15'

CONCRETE DEPTH	
SIDE RAMPS	4"
LANDING & CURB RAMPS	6"

1. 7.5%; 8.33% (1:12) MAX RAMP SLOPE
2. 1.5%; 2.08% (1:48) MAX CROSS SLOPE
3. CURB RAMPS REQUIRE A (4'-0") MINIMUM LANDING WITH A MAXIMUM CROSS SLOPE AND LONGITUDINAL SLOPE OF 1.5% (2.08% MAX) WHERE PEDESTRIANS PERFORM TURNING MANEUVERS. SLOPE TO DRAIN TO CURB.
4. RAMPS AND DOMES SHALL BE INSTALLED THE SAME WIDTH AS THE SIDEWALK.

CROSS SLOPE NOT TO EXCEED 1.5% (2.08% MAX) ON ANY PORTION OF RAMP OR TRANSITION TO STREET.

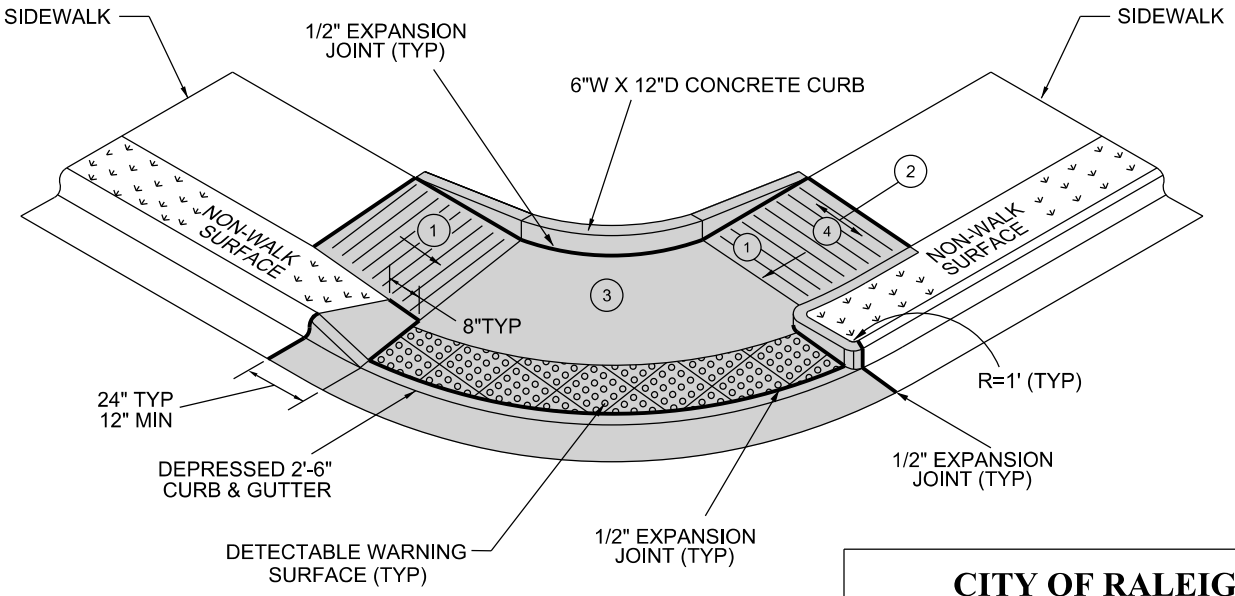

LARGER RADIUS 15' OR GREATER

ONLY TO BE USED WITH CITY OF RALEIGH APPROVAL.

SHEET 7 OF 9

CITY OF RALEIGH

STANDARD DETAIL

REVISIONS	DATE: 8/2020	NOT TO SCALE
DATE: 12/2022	SHARED CURB RAMP/FLARE (RETROFIT)	
	T-20.01.7	

CITY OF RALEIGH
CURB RAMPS
GENERAL NOTES

1. CITY OF RALEIGH STANDARD CURB RAMPS HAVE BEEN DEVELOPED IN ACCORDANCE WITH THE AMERICANS WITH DISABILITIES ACT (ADA) AND PUBLIC RIGHT OF WAY ACCESS GUIDELINES (PROWAG).

2. CURB RAMPS SHALL BE PROVIDED AT LOCATIONS AS SHOWN ON THE PLANS OR AS DIRECTED BY THE ENGINEER. SIDEWALK ACCESS RAMPS SHALL BE LOCATED AS INDICATED IN THE DETAIL, HOWEVER, THE LOCATION MAY BE ADJUSTED IN COORDINATION WITH THE CITY OF RALEIGH WHERE EXISTING LIGHT POLES, FIRE HYDRANTS, DROP INLETS, ETC. AFFECT PLACEMENT.

3. DOUBLE WHEELCHAIR RAMPS ARE TO BE INSTALLED AT ALL PUBLIC STREET INTERSECTIONS WHERE SIDEWALK IS REQUIRED.

4. THE WALKING SURFACE SHALL BE SLIP RESISTANT. THE COLOR FOR THE DETECTABLE WARNING AREA SHALL BE YELLOW FOR CONTRAST.

5. NO SLOPE ON THE SIDEWALK ACCESS RAMP SHALL EXCEED 1"/FT (12:1) IN RELATIONSHIP TO THE GRADE OF THE STREET.

6. IN NO CASE SHALL THE WIDTH OF THE SIDEWALK ACCESS RAMP BE LESS THAN 48" ALL RAMPS SHALL BE INSTALLED THE SAME WIDTH AS THE SIDEWALK.

7. USE CLASS A (3000 PSI) CONCRETE WITH A SIDEWALK FINISH IN ORDER TO OBTAIN A ROUGH NONSKID SURFACE.

8. A 1/2" EXPANSION JOINT INSTALLED FULL DEPTH WILL BE REQUIRED WHERE THE CONCRETE SIDEWALK ACCESS RAMP JOINS THE CURB AND ALSO WHERE NEW CONCRETE ABUTS EXISTING CONCRETE.

9. CURB RAMPS SHOULD BE PLACED PARALLEL TO THE DIRECTION OF TRAVEL.

CITY OF RALEIGH **STANDARD DETAIL**	
REVISIONS	*DATE: 8/2020* *NOT TO SCALE*
	CURB RAMP NOTES
	T-20.01.8

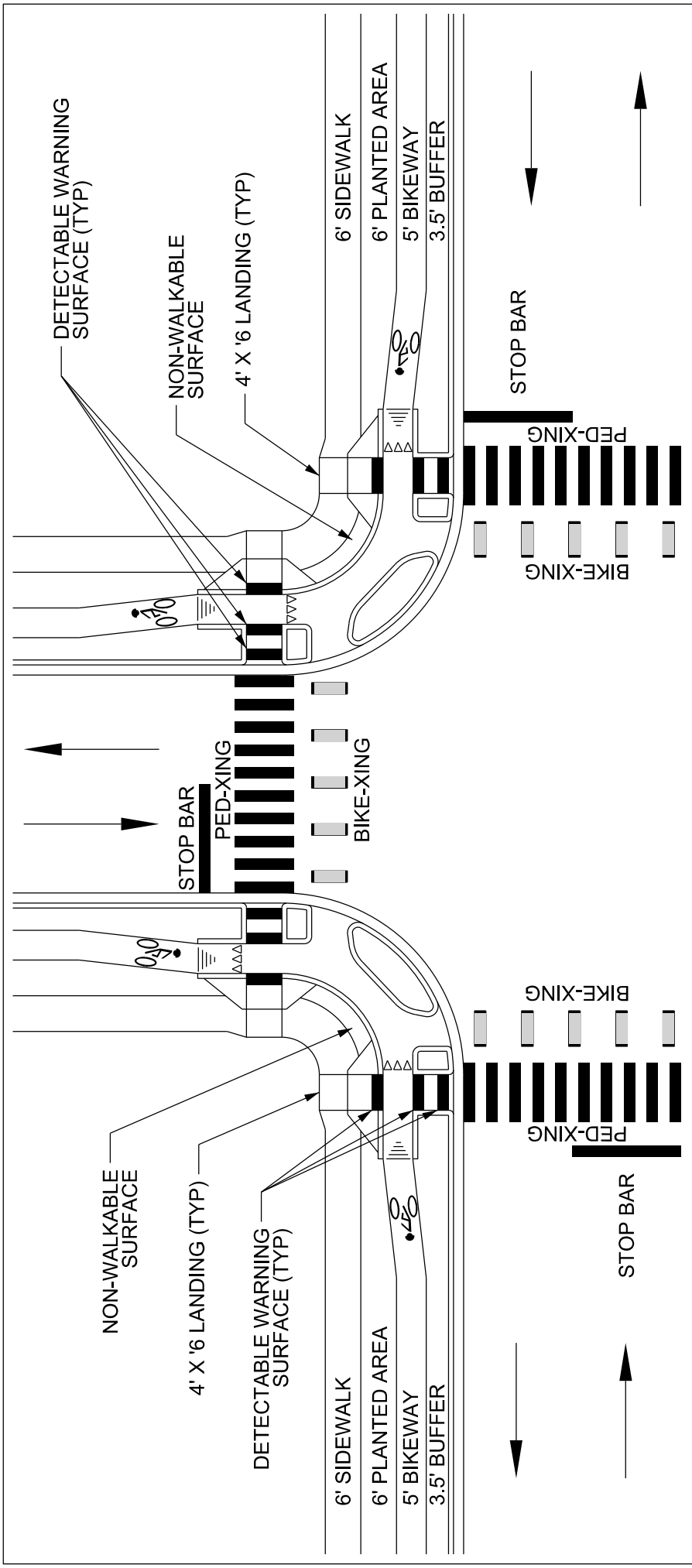

SHEET 9 OF 9

CITY OF RALEIGH

STANDARD DETAIL

REVISIONS	DATE: 12/2022	NOT TO SCALE
	CURB RAMPS AT CURB-LEVEL BIKEWAY CROSSINGS	
	T-20.01.9	

PAY LIMITS FOR CURB RAMP

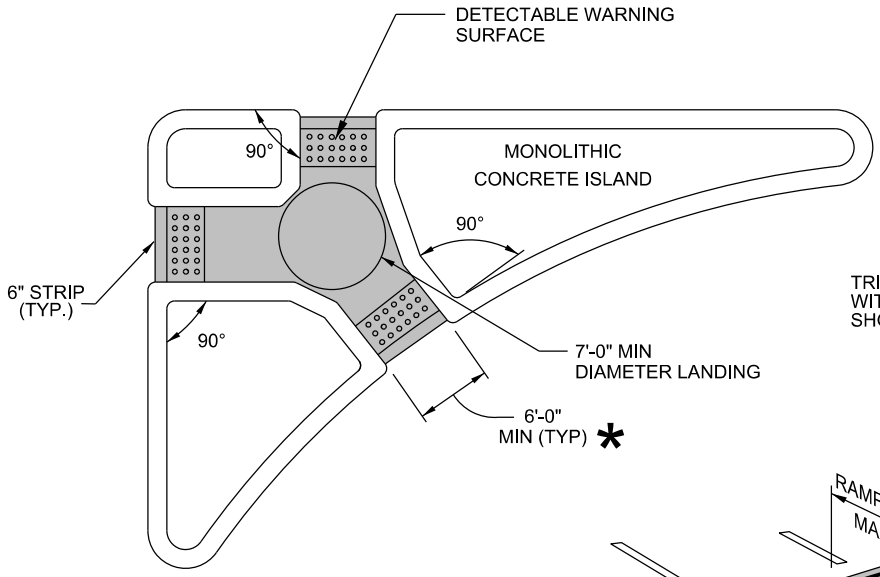

TRIANGULAR ISLANDS MAY BE CONSTRUCTED WITH ONLY 2 POINTS OF ENTRY AND EXIT AS SHOWN IN THE ROADWAY PLANS.

TRIANGULAR ISLAND WITH CUT THROUGH

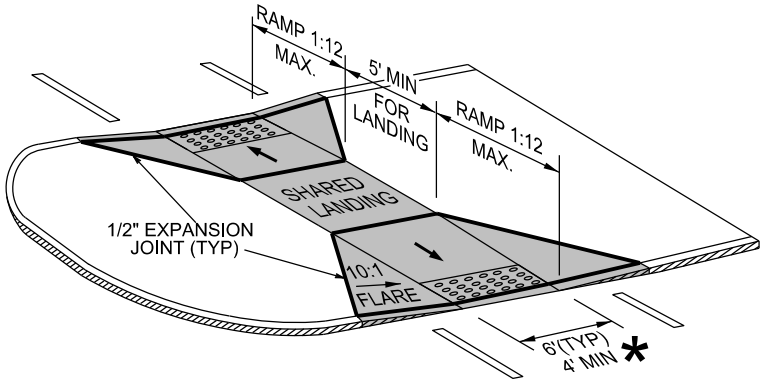

* 10'-0" MIN AT SHARED PEDESTRIAN AND BICYCLE CROSSINGS (TYP)

MEDIAN ISLAND CURB RAMPS

(MEDIANS WIDER THAN 20')

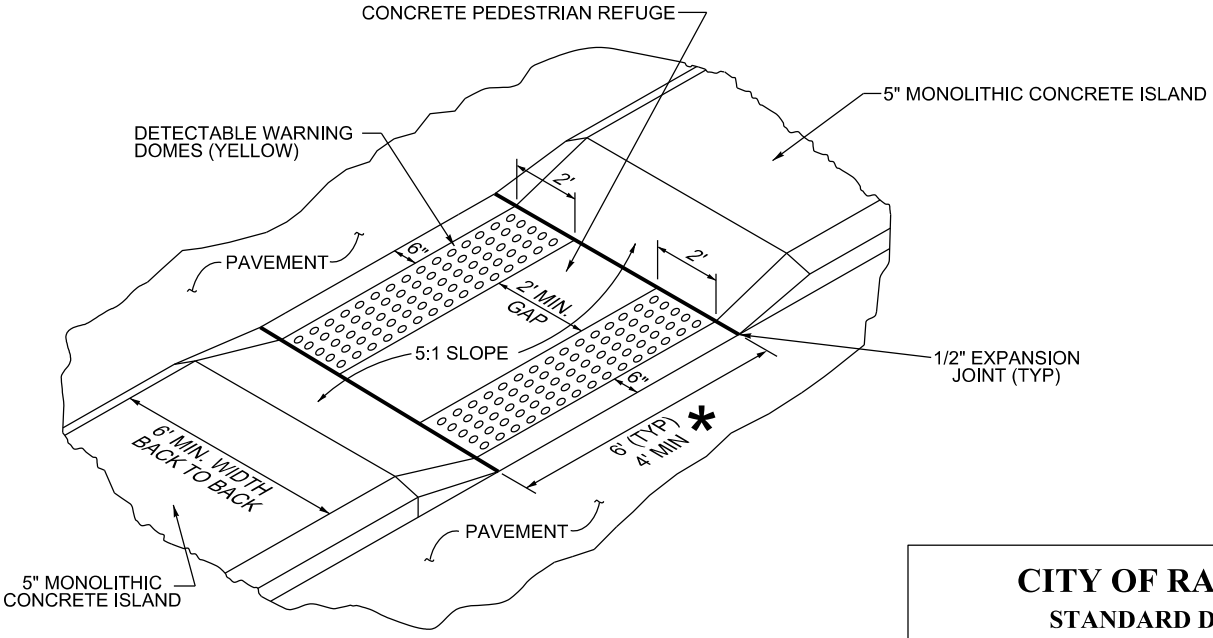

MEDIAN ISLAND WITH CUT THROUGH

(MEDIANS ≤ 20')

CITY OF RALEIGH
STANDARD DETAIL

REVISIONS	DATE: 8/2020	NOT TO SCALE
DATE: 12/2022	MEDIAN ISLAND CURB RAMPS/CUT THROUGHS	
	T-20.02	

ISOMETRIC VIEW

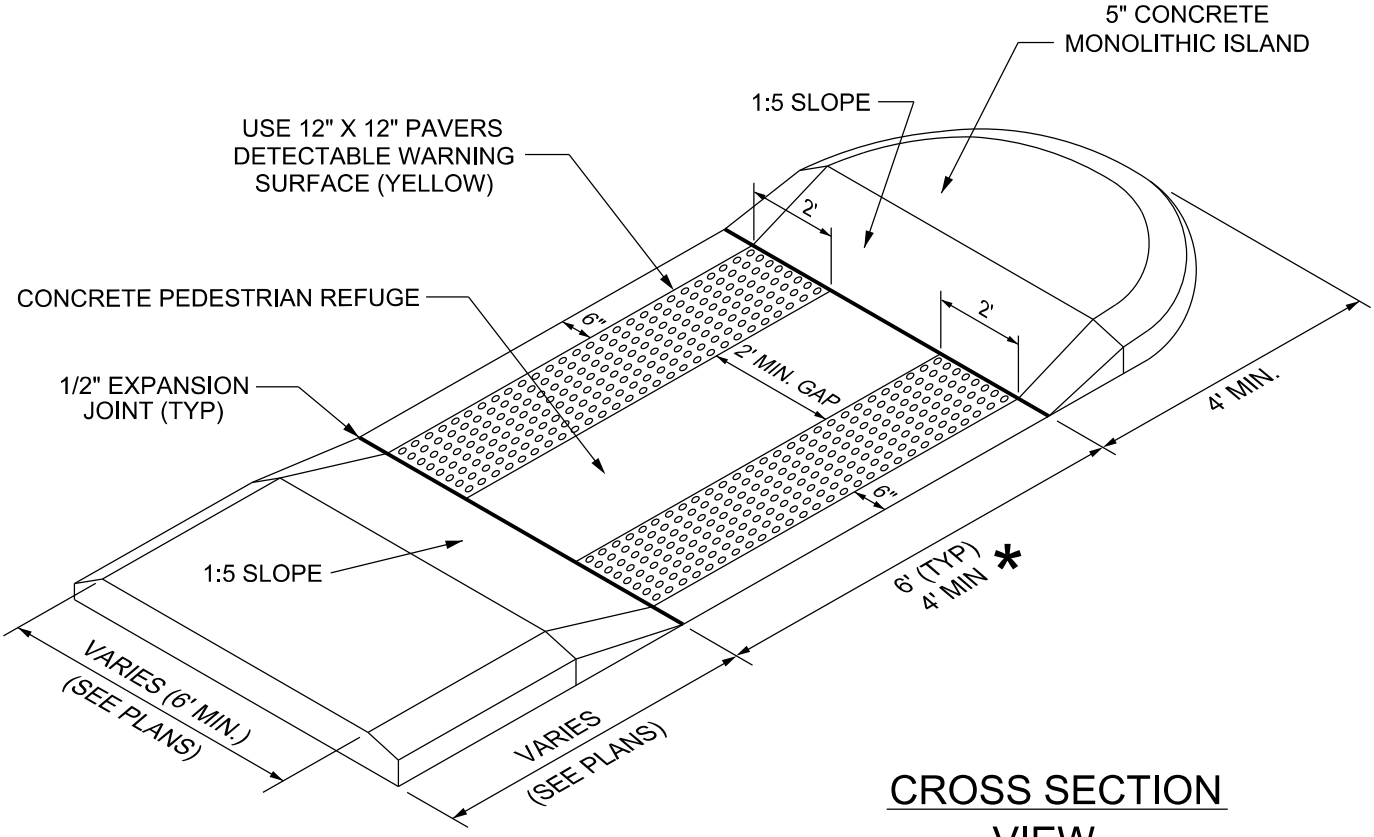

CROSS SECTION VIEW

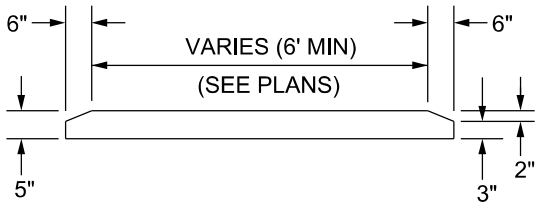

* 10'-0" MIN AT SHARED PEDESTRIAN AND BICYCLE CROSSINGS (TYP)

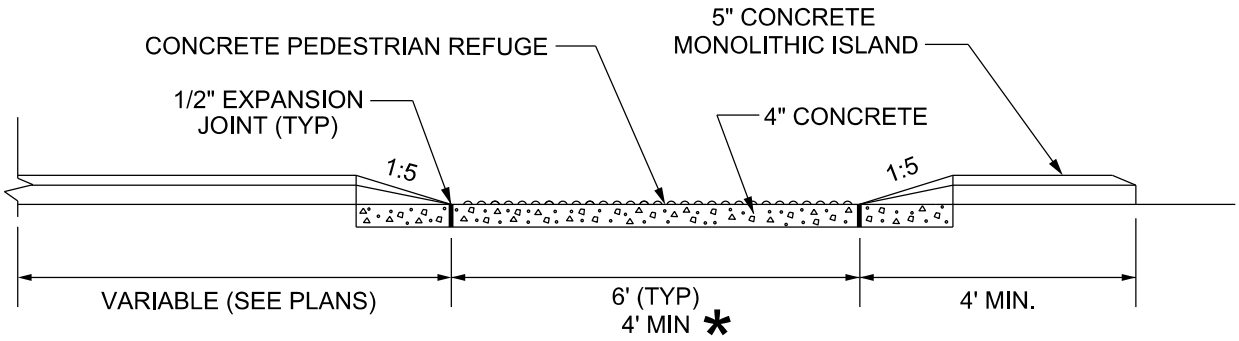

PROFILE VIEW

CITY OF RALEIGH STANDARD DETAIL		
REVISIONS	DATE: 8/2020	NOT TO SCALE
DATE: 12/2022	PEDESTRIAN REFUGE	
	T-20.03	

TYPE N-1, N-1A & R-1

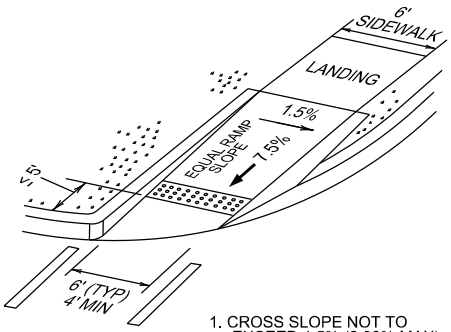

1. CROSS SLOPE NOT TO EXCEED 1.5% (2.08% MAX) ON ANY PORTION OF RAMP OF TRANSITION TO STREET.
2. RUNNING SLOPE NOT TO EXCEED 7.5% (8.33% MAX)

TYPE N-2 & N-3

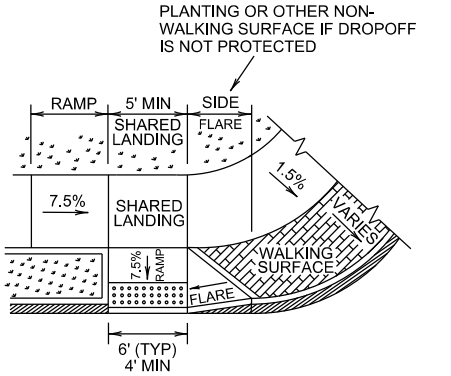

1. CROSS SLOPE NOT TO EXCEED 1.5% (2.08% MAX) ON ANY PORTION OF RAMP OF TRANSITION TO STREET.
2. RUNNING SLOPE NOT TO EXCEED 7.5% (8.33% MAX)

TYPE N-3A

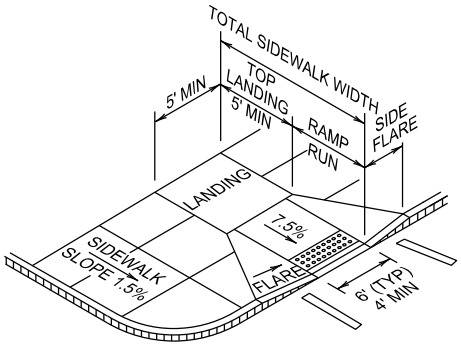

1. CROSS SLOPE NOT TO EXCEED 1.5% (2.08% MAX) ON ANY PORTION OF RAMP OF TRANSITION TO STREET.
2. RUNNING SLOPE NOT TO EXCEED 7.5% (8.33% MAX)

TYPE R-1A

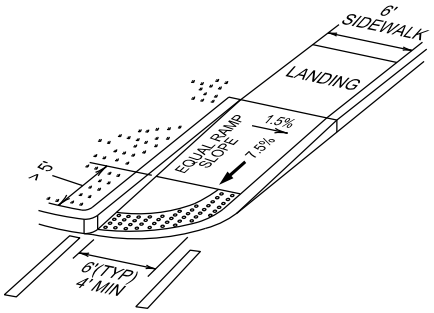

1. CROSS SLOPE NOT TO EXCEED 1.5% (2.08% MAX) ON ANY PORTION OF RAMP OF TRANSITION TO STREET.
2. RUNNING SLOPE NOT TO EXCEED 7.5% (8.33% MAX)

TYPE R-2

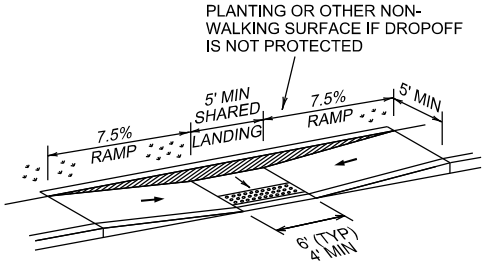

PARALLEL CURB RAMP

TYPE R-3

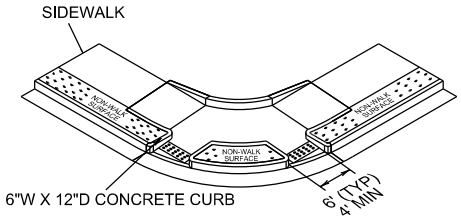

TYPE R-4

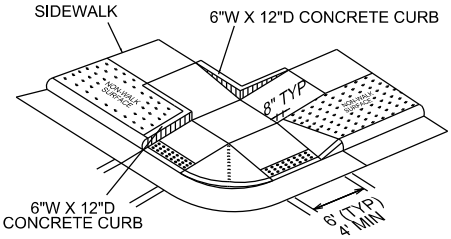

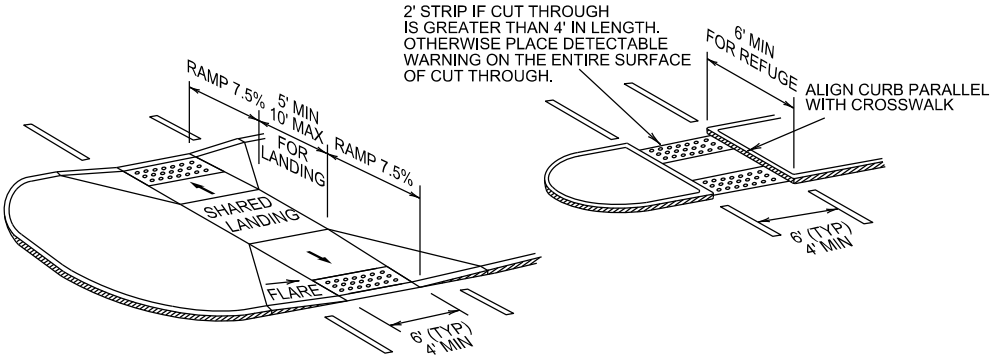

CURB RAMPS AT MEDIAN ISLANDS

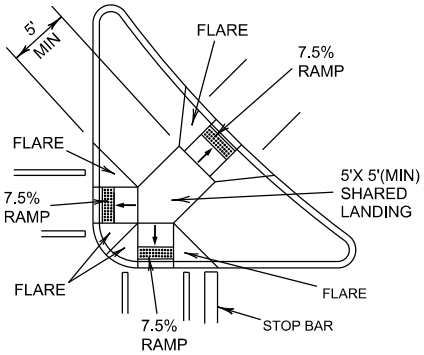

DETECTABLE WARNING SURFACE SHALL EXTEND FULL WIDTH OF SIDEWALK OR RAMP

SHEET 1 OF 4

CITY OF RALEIGH
STANDARD DETAIL

REVISIONS	DATE: 8/2020	NOT TO SCALE
DATE: 12/2022	DETECTABLE WARNING SURFACE PLACEMENT	
	T-20.04.1	

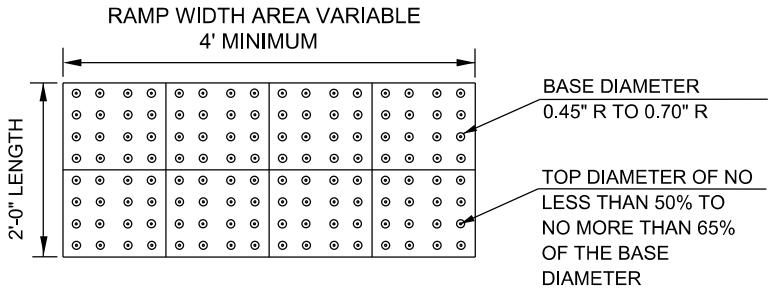

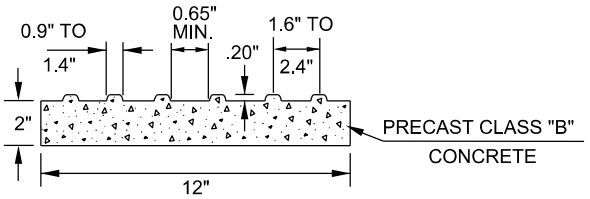

DETECTABLE WARNING
DOMES CONCRETE PAVER

* 8.33% (1:12) max

** 2.08% (1:48) max

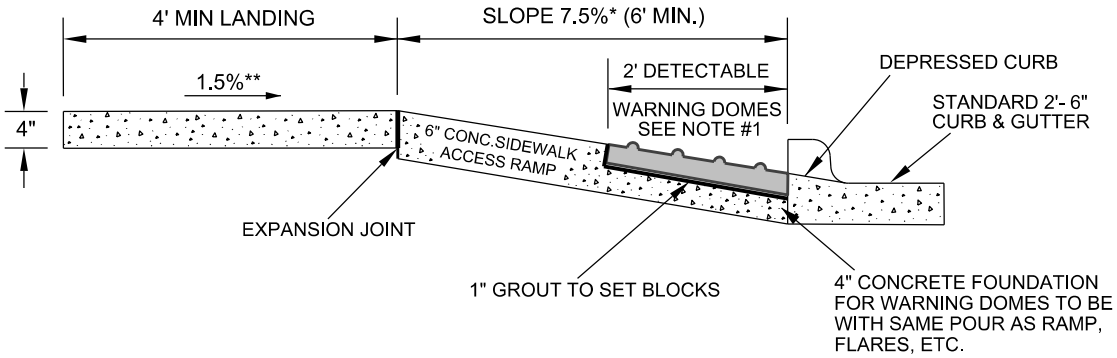

RAMP SECTION

WITH DETECTABLE WARNING PAVERS

NOTES:

1. DETECTABLE WARNING DOMES SHALL COVER 2'-0" LENGTH AND FULL WIDTH OF THE RAMP FLOOR AS SHOWN ON DETAIL. SIZE OF PAVER SHALL BE 1' X 1'.

2. THE COLOR FOR THE DETECTABLE WARNING AREA SHALL BE YELLOW FOR CONTRAST.

CITY OF RALEIGH

STANDARD DETAIL

REVISIONS	DATE: 8/2020	NOT TO SCALE
DATE: 12/2022	DETECTABLE WARNING SURFACE PAVERS	
	T-20.04.2	

* 8.33% (1:12) max

** 2.08% (1:48) max

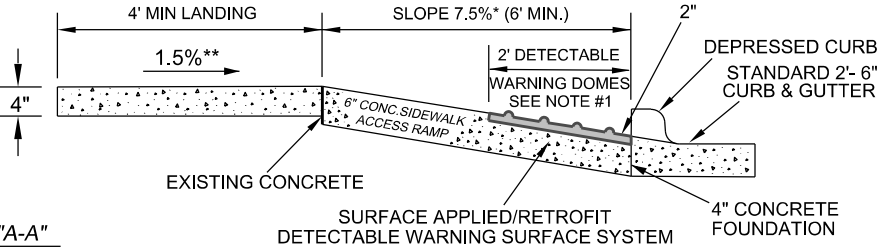

SECTION "A-A"

WITH DETECTABLE WARNING PAVERS

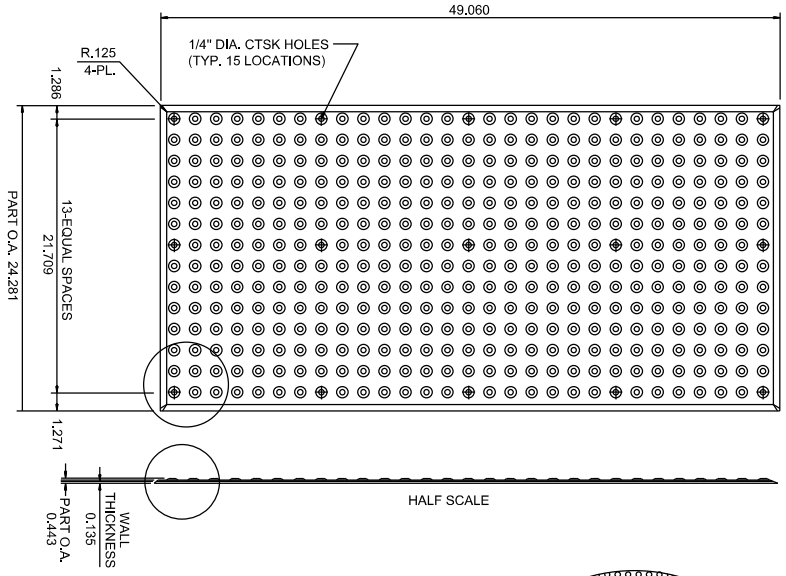

1/4" X 1 1/2" LG.
EXPANSION ANCHOR

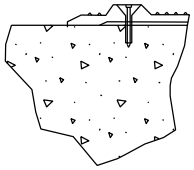

TILE INSTALLATION
VIEW B 4X SCALE

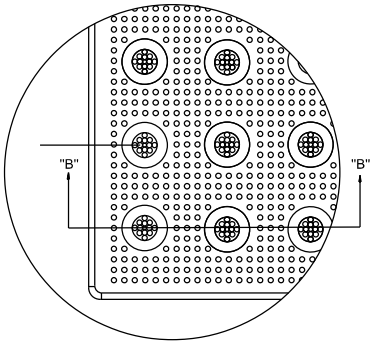

NOTE:

THIS APPLICATION ONLY TO BE USED WHEN RETRO FITTING EXISTING BARRIER FREE RAMPS

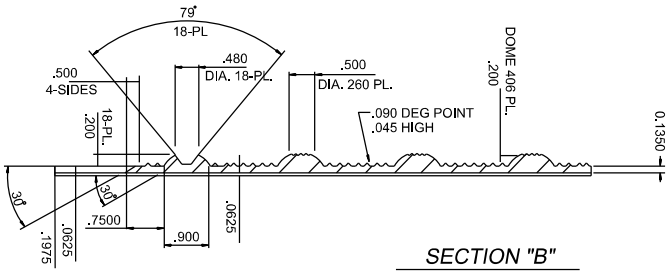

SECTION "B"

TYPICAL SECTION

NOTES:

1. DETECTABLE WARNING DOMES SHALL COVER 2'-0" LENGTH AND FULL WIDTH OF THE RAMP FLOOR AS SHOWN ON DETAIL.
2. THE COLOR FOR THE DETECTABLE WARNING AREA SHALL BE YELLOW FOR CONTRAST.

SHEET 3 OF 4

CITY OF RALEIGH

STANDARD DETAIL

REVISIONS	DATE: 8/2020	NOT TO SCALE
DATE: 12/2022	DETECTABLE WARNING SURFACE, SURFACE APPLIED (RETROFIT ONLY)	
	T-20.04.3	

RAMP SECTION

WITH DETECTABLE WARNING SURFACE
CAST-IN-PLACE SYSTEM

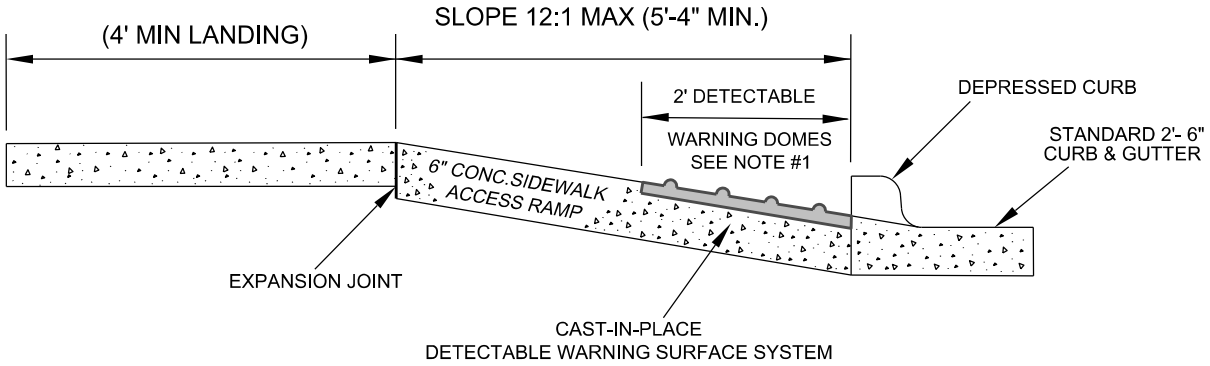

NOTES:

1. DETECTABLE WARNING DOMES SHALL COVER 2'-0" LENGTH AND FULL WIDTH OF THE RAMP FLOOR AS SHOWN ON DETAIL.

2. THE COLOR FOR THE DETECTABLE WARNING AREA SHALL BE YELLOW FOR CONTRAST.

CITY OF RALEIGH
STANDARD DETAIL

REVISIONS	DATE: 8/2020	NOT TO SCALE
DATE: 12/2022	DETECTABLE WARNING CAST-IN-PLACE	
	T-20.04.4	

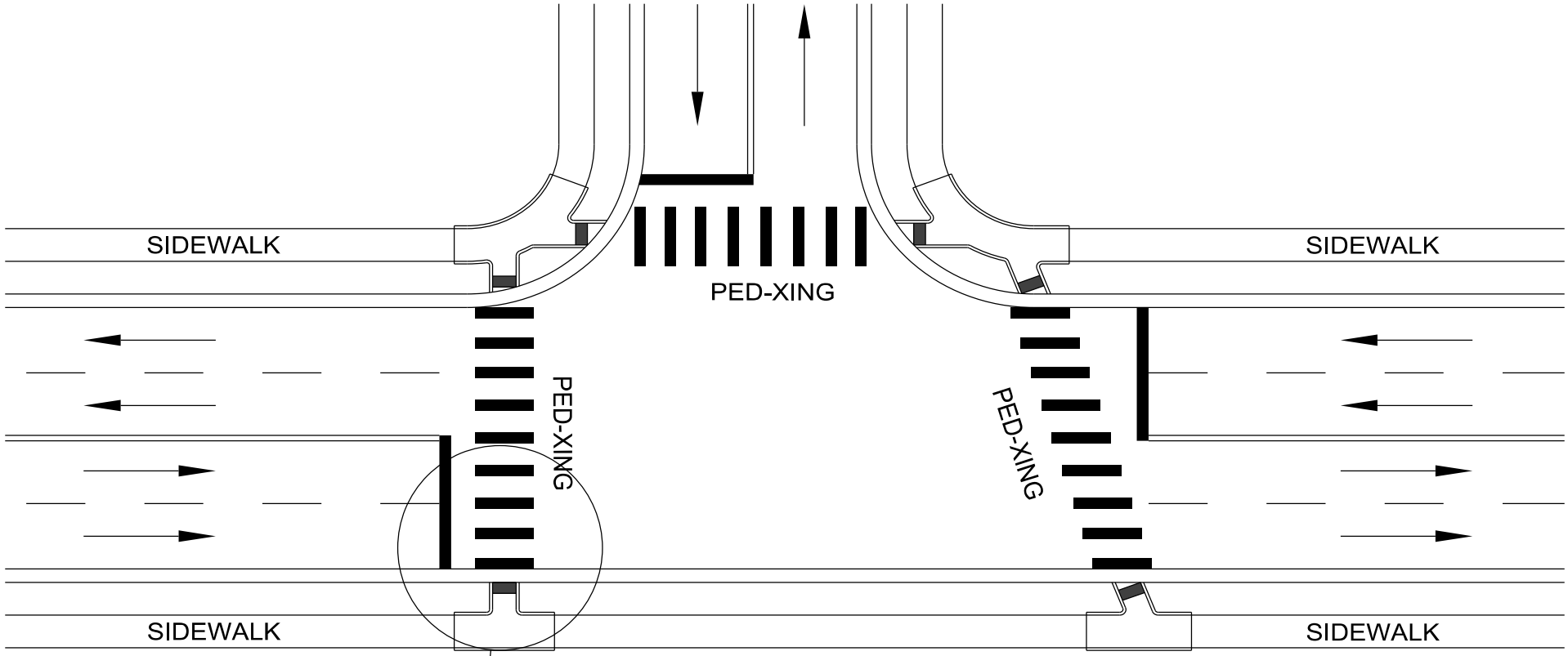

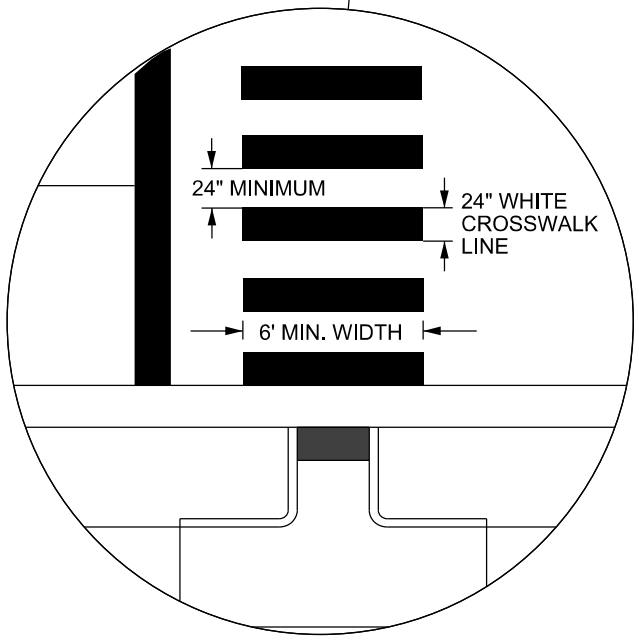

NOTES:

1. HI-VISIBILITY CROSSWALKS SHOULD ONLY BE USED AT CROSSINGS WHERE THE INTERSECTION IS SIGNALIZED OR UN-CONTROLLED BY ANY TRAFFIC CONTROL DEVICE (e.g. STOP SIGN).
2. THE CROSSWALK LINE SHOULD BE PLACED AT THE ANGLE OF THE TRAVEL LANES AND TRAVERSE THE PEDESTRIAN CROSSING.
3. A CROSSWALK LINE SHOULD BE PLACED TO AVOID WHEEL PATHS. THIS IS IDEALLY DONE BY CENTERING THE LINES AT THE EDGE OF EACH TRAVEL LANE AND IN THE CENTER OF EACH TRAVEL LANE. DUE TO VARYING LANE WIDTHS THIS IS SOMETIMES NOT POSSIBLE.
4. PLACE STOP BARS A MINIMUM OF 4 FEET FROM NEAREST CROSSWALK LINE. STOP BARS AT SIGNALIZED INTERSECTIONS SHOULD BE COORDINATED WITH THE CITY OF RALEIGH TRANSPORTATION OPERATIONS DIVISION OR AS DIRECTED BY THE ENGINEER.
5. CURB RAMPS SHALL BE CONSTRUCTED IN ACCORDANCE TO THE LATEST CITY OF RALEIGH STANDARD DRAWINGS.

CITY OF RALEIGH
STANDARD DETAIL

REVISIONS

DATE: 8/2020

NOT TO SCALE

PAVEMENT MARKINGS
HI-VISIBILITY
PEDESTRIAN CROSSWALK

T-20.05

CITY OF RALEIGH

STANDARD DETAIL

REVISIONS	DATE: 12/2022	NOT TO SCALE
	GREEN THERMOPLASTIC BIKE LANE MARKING	
	T-20.06	

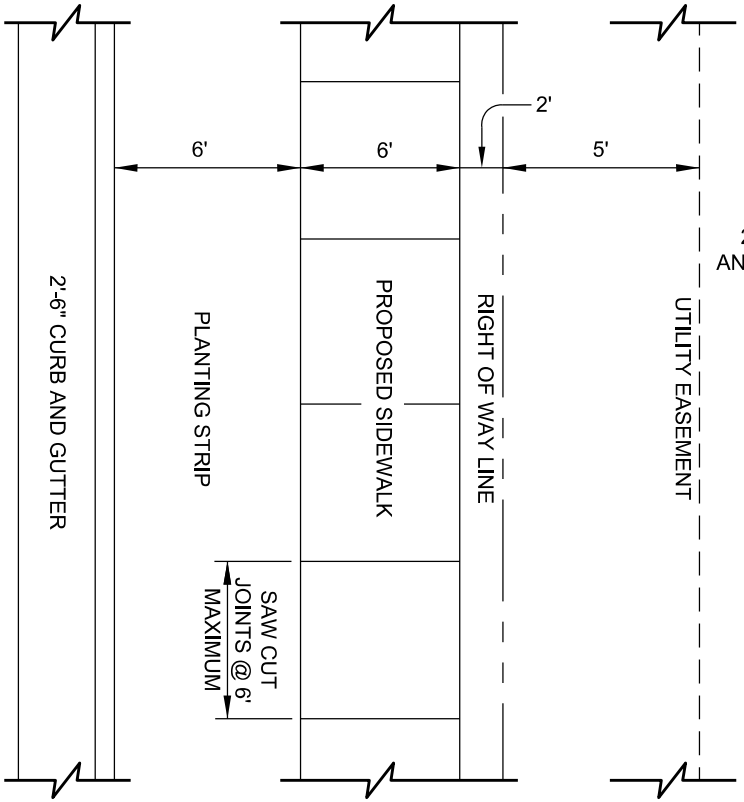

PLAN VIEW

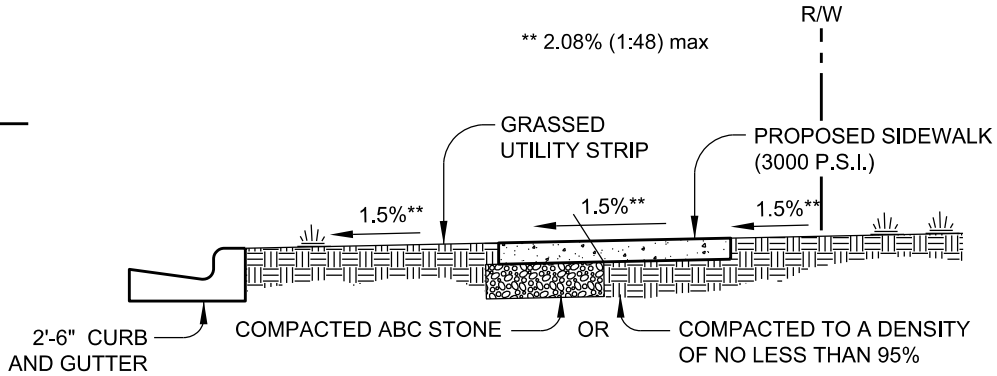

TYPICAL SECTION

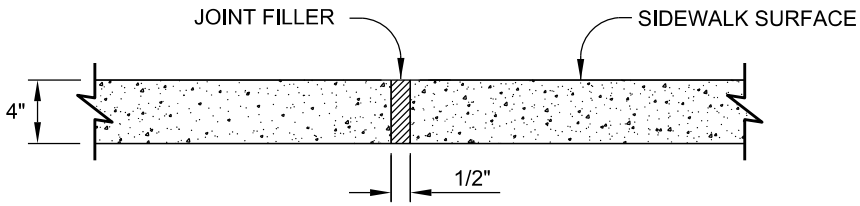

TRANSVERSE EXPANSION JOINT

NOTES:

1. TRANSVERSE EXPANSION JOINTS TO BE A MAXIMUM OF 50 FEET.
2. ALL CONCRETE TO BE 3000 PSI AND FINISHED WITH CURING COMPOUND.
3. A 6 INCH DEPTH IS REQUIRED AT LOCATIONS OF DRIVEWAY CROSSINGS, AT STREET INJTERSECTIONS (ALONG THE LENGTH OF RADIUS CURB RETURNS), AND IN THE HANDICAP RAMPS.
4. COMPACTED ABC STONE MAY BE REQUIRED AS SUBGRADE AT THE DISCRESTION OF THE INSPECTOR
5. SURFACE SHALL BE FINISHED TO GRADE AND CROSS SECTION WITH A FLOAT, TROWEL SMOOTH AND FINISH WITH A BROOM
6. WHERE UTILITY BOXES/VAULTS MUST BE LOCATED IN THE SIDEWALK, THEY SHALL HAVE A MINIMUM 3" WIDE FRAME OF CONCRETE AROUND THEM

CITY OF RALEIGH
STANDARD DETAIL

REVISIONS
DATE: 12/2022
DATE: 08/2023

DATE: 8/2020

NOT TO SCALE

CONCRETE SIDEWALK

T-30.01.1

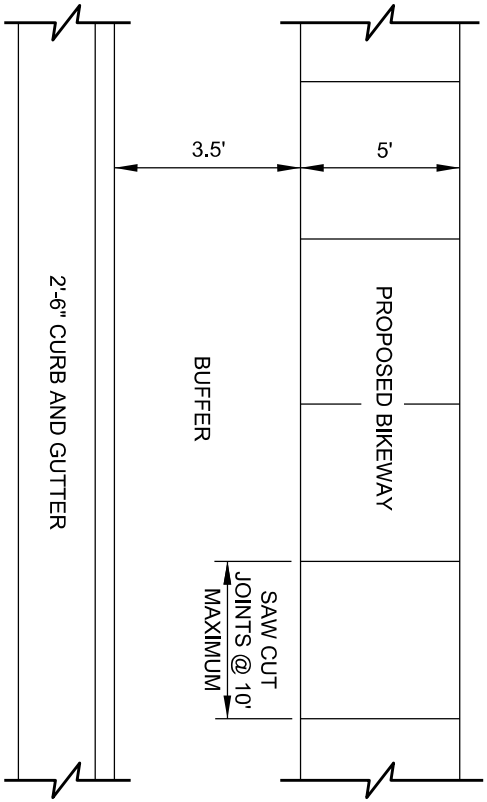

PLAN VIEW

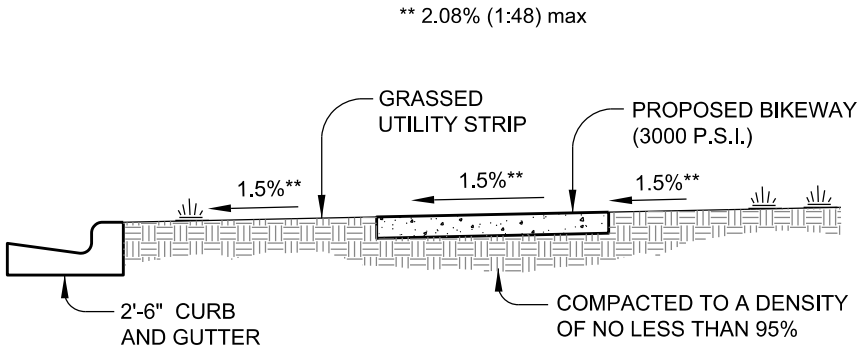

TYPICAL SECTION

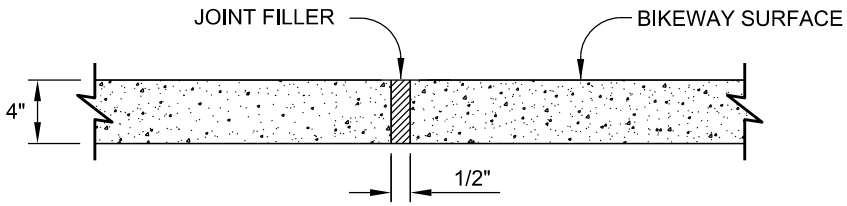

TRANSVERSE EXPANSION JOINT

NOTES:

1. TRANSVERSE EXPANSION JOINTS TO BE A MAXIMUM OF 50 FEET.
2. ALL CONCRETE TO BE 3000 PSI AND FINISHED WITH CURING COMPOUND.
3. A 6 INCH DEPTH IS REQUIRED AT LOCATIONS OF DRIVEWAY CORSSINGS, AT STREET INTERSECTIONS (ALONG THE LENGTH OF RADIUS CURB RETURNS) AND IN THE HANDICAP RAMPS.
4. BIKEWAY MATERIAL SHALL BE INTEGRALLY COLORED CONCRETE, COLORED BLACK, USING NON-FADING PIGMENTS.
5. CONTRACTOR SHALL SEAL ALL JOINTS. SEAL SHALL BE NON-SHRINKING AND FLUSH WITH FINISHED GRADE OF THE CONCRETE BIKEWAY.
6. JOINTS SHALL BE SAWCUT A MINIMUM OF 1/4 DEPTH, BUT NO MORE THAN 1/2 DEPTH.

CITY OF RALEIGH
STANDARD DETAIL

REVISIONS

DATE: 12/2022

NOT TO SCALE

CONCRETE BIKEWAY

T-30.01.2

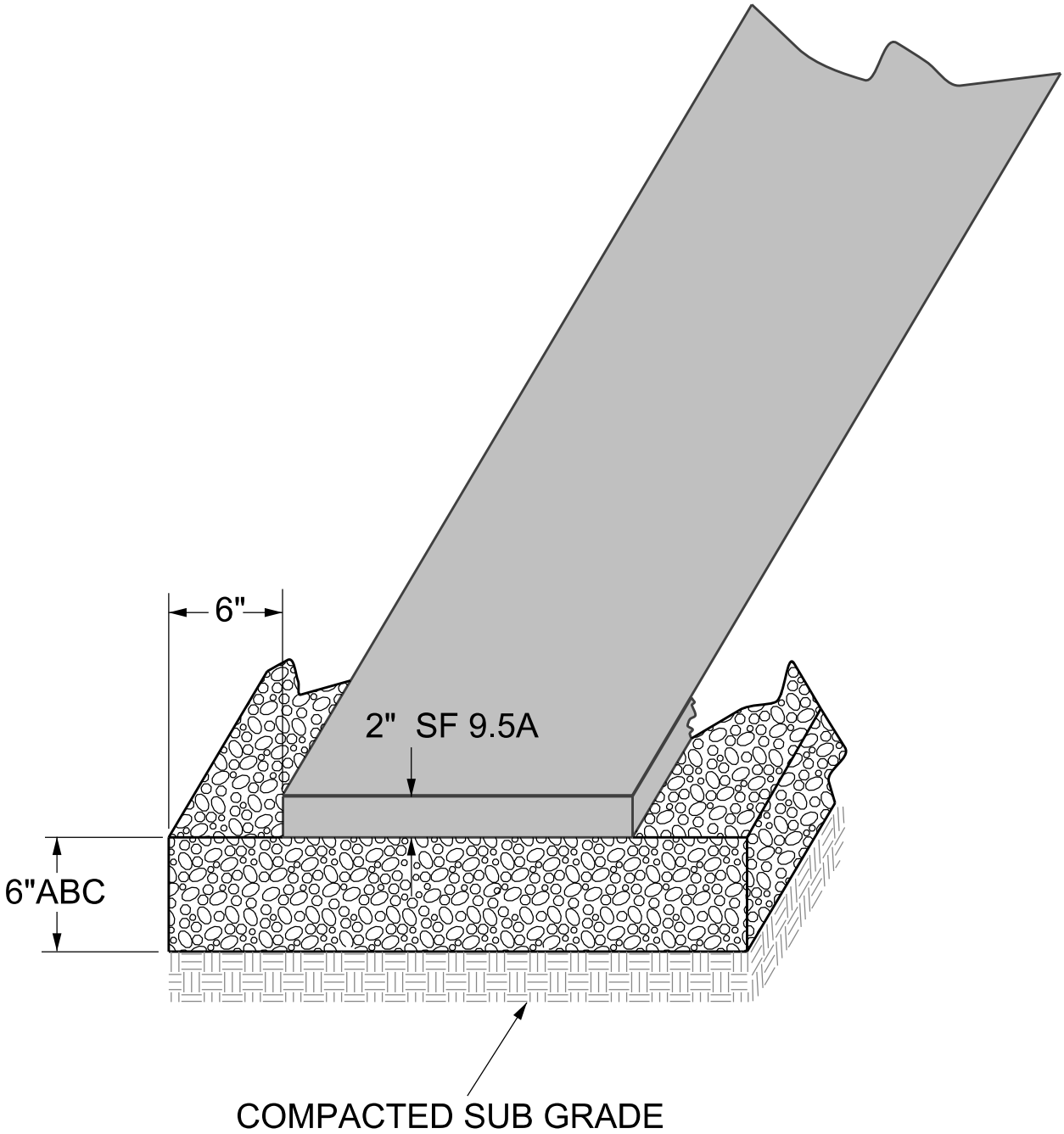

CITY OF RALEIGH
STANDARD DETAIL

REVISIONS	DATE: 8/2020 NOT TO SCALE
	ASPHALT MULTI-PURPOSE PATH
	T-30.02.1

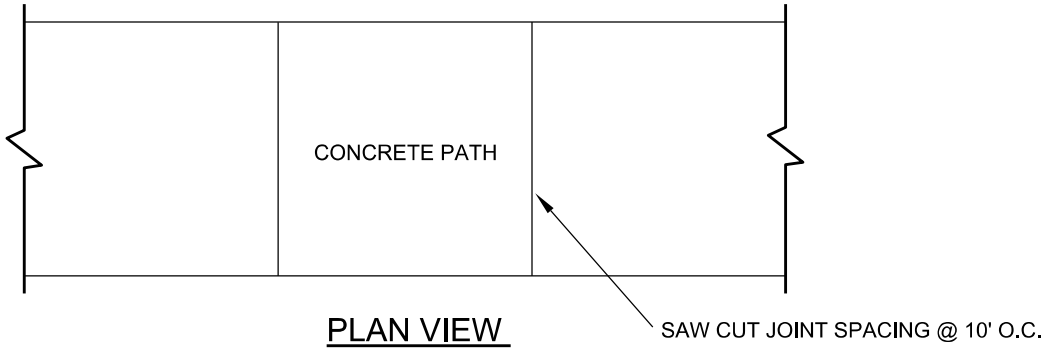

PLAN VIEW

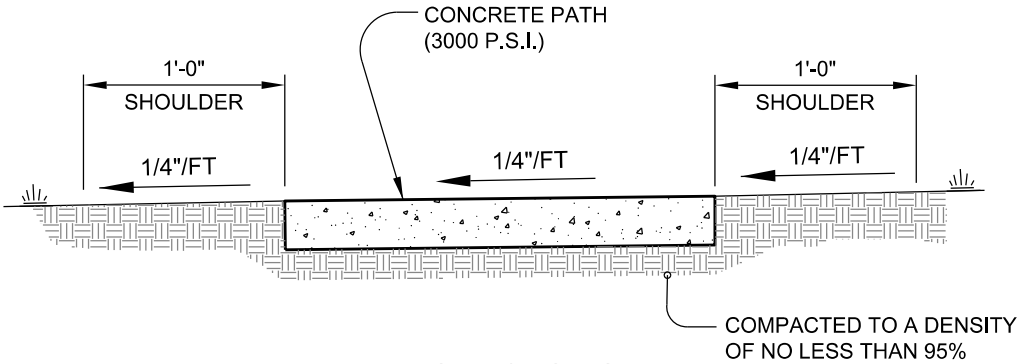

TYPICAL SECTION

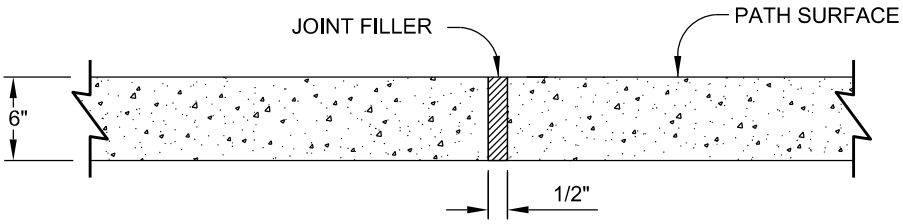

TRANSVERSE EXPANSION JOINT

NOTES:

1. TRANSVERSE EXPANSION JOINTS TO BE A MAXIMUM OF 50 FEET APART.
2. ALL CONCRETE TO BE FINISHED WITH CURING COMPOUND.
3. A 6 INCH DEPTH IS REQUIRED.
4. SAW CUT JOINTS EVERY 10 FEET OR SAME AS WIDTH. WHICHEVER IS LESS.
5. NO UTILITY SURFACE COVERS/PLATES/MANHOLES (i.e. WATERLINE VALVE COVERS, ETC.) SHALL BE LOCATED WITHIN PATH AND SHALL BE MINIMUM 1 FOOT FROM THE EDGE OF PATH.
6. ALL PATHS SHALL BE LOCATED MINIMUM 6 FEET FROM THE BACK OF CURB.
7. MULTI-USE PATH WIDTH TO BE DETERMINED BY CITY OF RALEIGH BASED ON ROADWAY TYPE, LOCATION AND PEDESTRIAN VOLUMES.

CITY OF RALEIGH
STANDARD DETAIL

REVISIONS	*DATE: 8/2020*	*NOT TO SCALE*
DATE: 12/2022	CONCRETE MULTI-PURPOSE PATH	
	T-30.02.2	

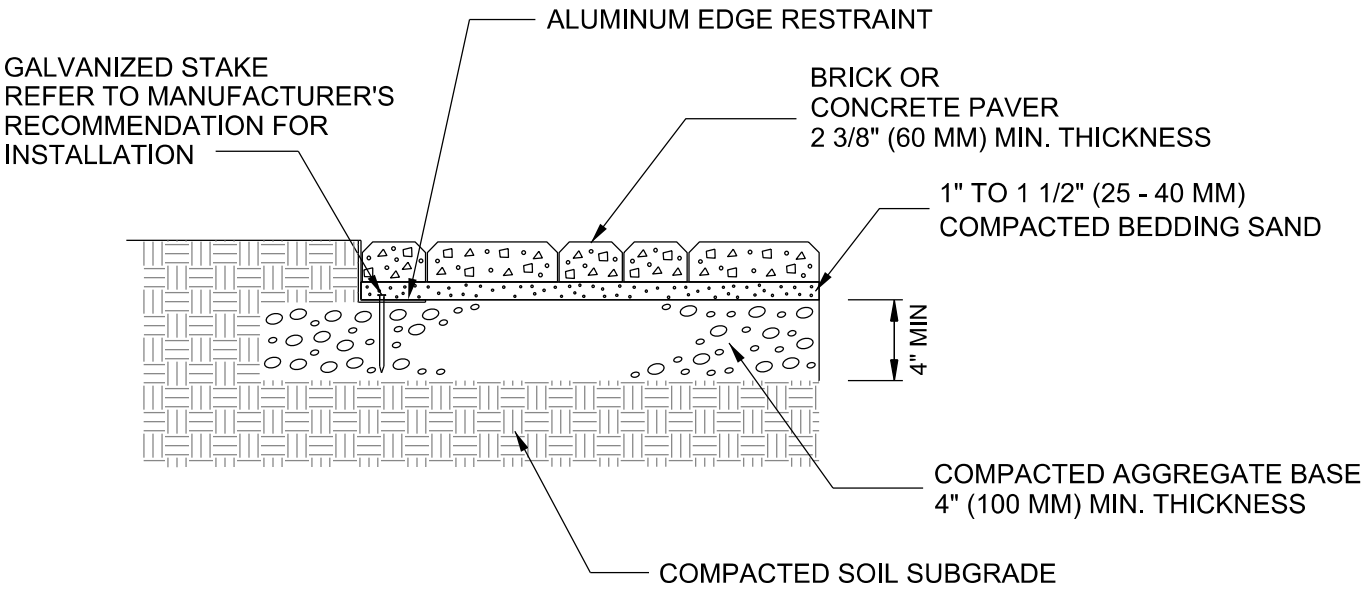

SECTION 1

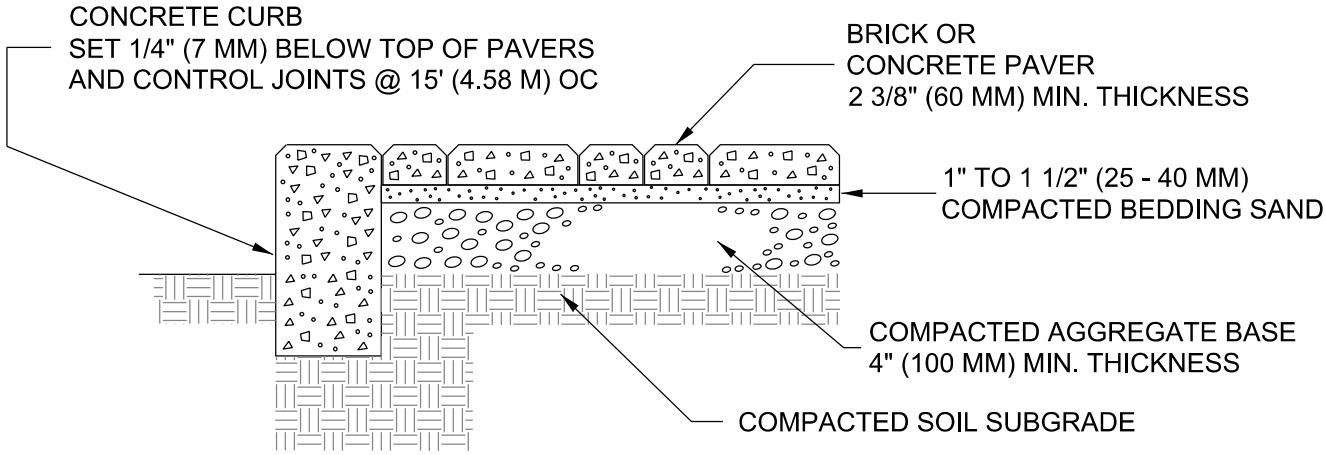

SECTION 2

NOTES:

1. BRICK OR CONCRETE PAVERS ALLOWED ONLY UNDER SPECIAL CONDITIONS.
2. THICKNESS OF BASE MAY VARY WITH SUBGRADE/TRAFFIC CONDITIONS.
3. SCATTER SAND OR SCREENINGS OVER COMPLETE WORK AND SWEEP INTO CRACKS.
4. CONCRETE PAVERS SHOULD CONFORM TO REQUIREMENTS OF ASTM C-1319.
   BRICK PAVERS SHOULD CONFORM TO REQUIREMENTS OF ASTM C902-95
5. SEE CITY OF RALEIGH CODE SECTION 10-7001 (D) FOR CONDITIONS UNDER
   WHICH CONCRETE / BRICK PAVERS ARE ALLOWED.

CITY OF RALEIGH
STANDARD DETAIL

REVISIONS	DATE: 8/2020	NOT TO SCALE
	CONCRETE/BRICK PAVER SIDEWALK DETAIL	
	T-30.03	

TYPE 1 INSTALLATION DETAIL

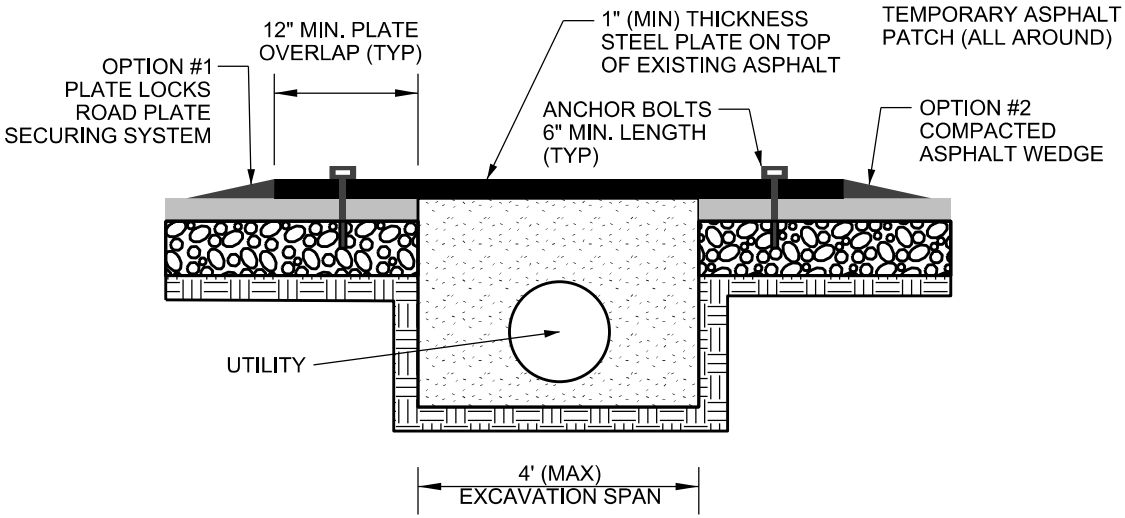

TYPE 2 INSTALLATION DETAIL

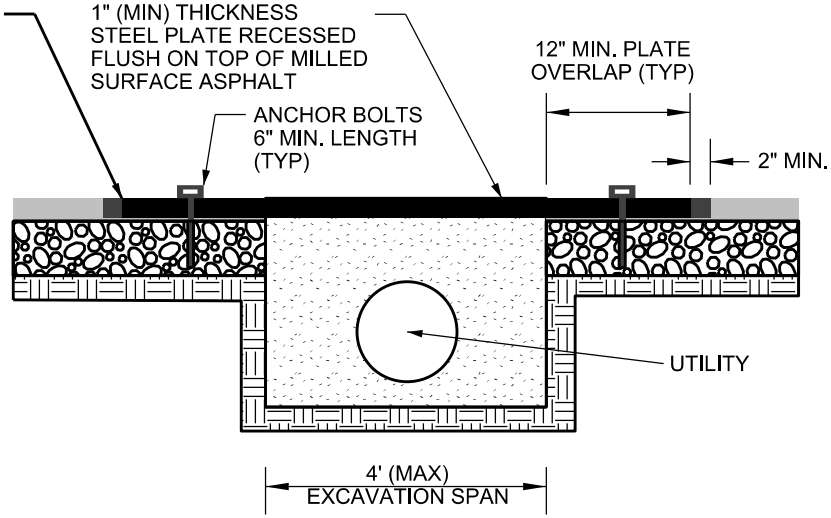

NOTES:

1. ALL ROAD PLATES MUST BE ACCOMPANIED BY A VALID RIGHT-OF-WAY PERMIT.
2. TYPE 1 INSTALLATIONS ARE FOR USE ON ROADWAYS WITH A POSTED SPEED LIMIT UNDER 35 MPH.
3. TYPE 2 INSTALLATIONS ARE FOR USE ON ROADWAYS WITH A POSTED SPEED LIMIT ABOVE 35 MPH.
4. ALL ROAD PLATE INSTALLATIONS SHALL BE APPROVED BY THE INSPECTOR PRIOR TO ALLOWING PUBLIC TRAFFIC.
5. ALL ROAD PLATE INSTALLATIONS, LIABILITY AND MAINTENANCE ARE THE RESPONSIBILITY OF THE CONTRACTOR
6. METAL PLATES SHALL BE IDENTIFIED WITH A 24" HIGH STENCILED TEXT OF THE CONTRACTOR NAME OR DESIGNATED ABBREVIATION AND A 6" HIGH STENCILED TEXT OF THE CONTRACTORS AFTER -HOURS 24/7 CONTACT PHONE NUMBER. ANY MARKING DEEMED UNREADABLE MUST BE REPAINTED. SEE DETAIL T-40.01.2
7. METAL PLATES WILL HAVE WHITE REFLECTIVE MARKING TAPE ON ALL FOUR CORNERS OF EACH END OF A TRENCH. THESE PLATES DESIGNATE THE BEGINNING AND END OF THE EXCAVATION. THE REFLECTIVE TAPE WILL BE DURABLE ENOUGH TO WITHSTAND TRAFFIC. ANY PEELING TAPE DEEMED UNREADABLE MUST BE REPLACED IMMEDIATELY. SEE DETAIL T-40.01.2.
8. WARNING SIGNS ADVISING MOTORISTS THAT THEY SHOULD EXPECT TO ENCOUNTER METAL PLATES SHALL BE PLACED AT PPROXIMATELY 100 FEET, IN ADVANCE OF THE METAL PLATE LOCATION THE "BUMP" OR "STEEL PLATE AHEAD" SHALL BE USED. SEE DETAIL T-40.01.2
9. PLATES THAT ARE LEFT OVERNIGHT WILL REQUIRE THAT THE WARNING SIGN BE SUPPLEMENTED WITH A LOW-INTENSITY-FLASHING WARNING LIGHT MOUNTED ON OR ADJACENT TO THE ADVANCE WARNING SIGNAGE.
10. FAILURE TO FOLLOW THE STEPS OUTLINED ABOVE WILL RESULT IN STOP WORK ORDERS, CITATIONS AND FINES TO THE PERMITTEE OR CONTRACTOR WORKING WITHOUT A VALID PERMIT. ROAD PLATES REMOVED OR REPAIRED BY THE CITY WILL RESULT IN STOP WORK ORDERS, CITATIONS AND FINES.
11. PAVEMENT MUST BE RESTORED TO THE PREVIOUS OR BETTER CONDITION ONCE THE PLATE HAS BEEN REMOVED.

CITY OF RALEIGH
STANDARD DETAIL

REVISIONS
DATE: 08/2023

DATE: 8/2023
NOT TO SCALE

STEEL ROAD PLATE

T-40.01.1

ADVANCED WARNING SIGNAGE

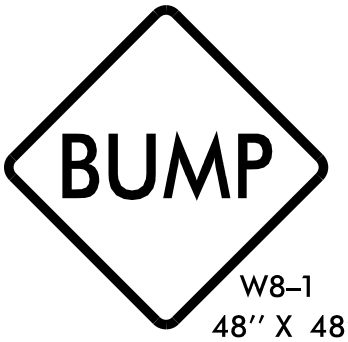

OR

METAL PLATE MARKING EXAMPLES

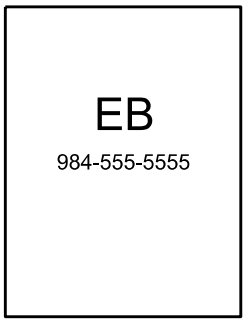

METAL PLATE REFLECTIVE TAPE DETAILS

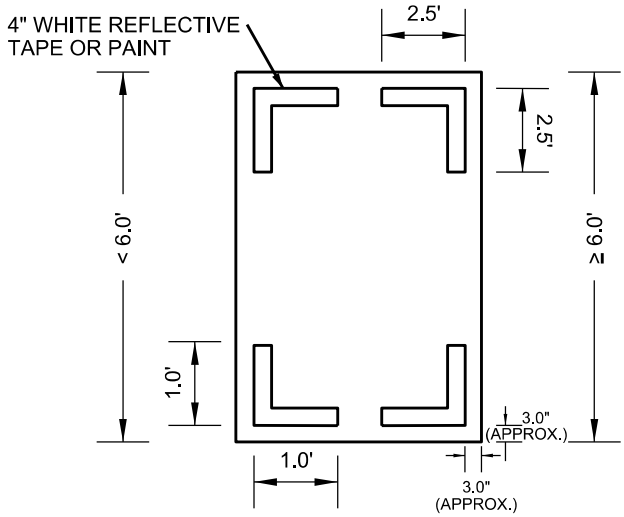

SHEET 2 OF 2

CITY OF RALEIGH
STANDARD DETAIL

REVISIONS	DATE: 8/2023	NOT TO SCALE
	STEEL ROAD PLATE	
	T-40.01.2	