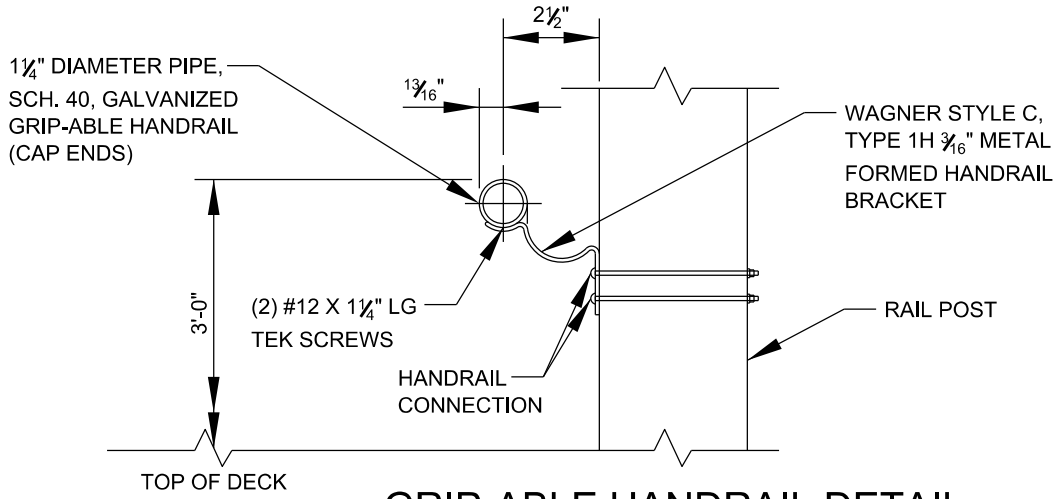

GRIP-ABLE HANDRAIL DETAIL

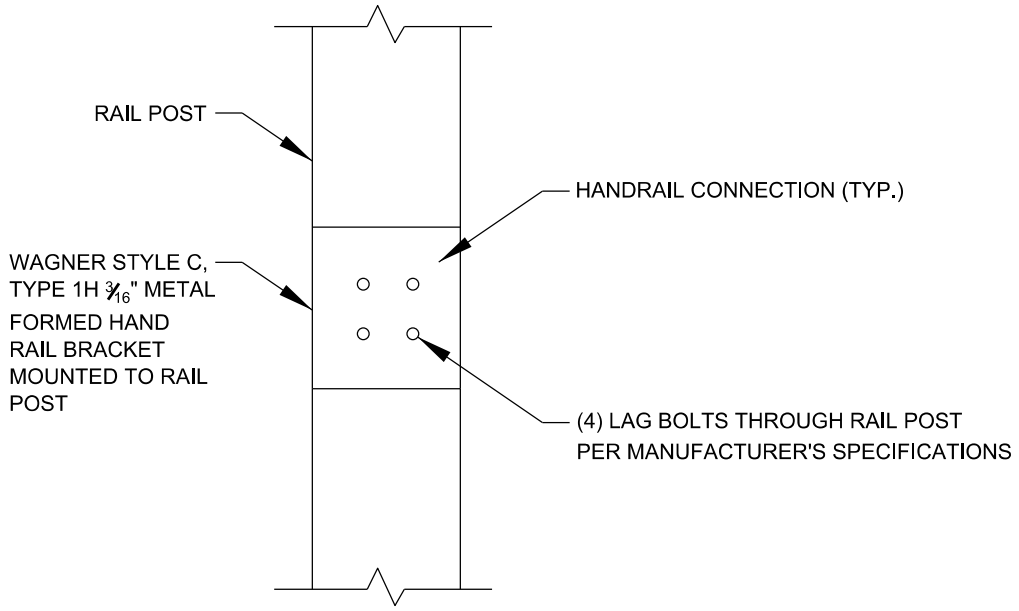

GRIP-ABLE HANDRAIL ATTACHMENT DETAIL

BRIDGE OR BOARDWALK RUB RAIL / HANDRAIL ATTACHMENT

NOTE:

1. A GRIP-ABLE, ROUND RAIL THAT WILL ACT AS BOTH A RUB RAIL AND HANDRAIL SHALL ONLY BE REQUIRED WHEN GRADES ARE GREATER THAN 5%.

CITY OF RALEIGH STANDARD DETAIL		
REVISIONS	DATE: 12/2022	NOT TO SCALE
	BRIDGE OR BOARDWALK RUB RAIL / HANDRAIL ATTACHMENT	
	GW-30.04	