TYPE 1 INSTALLATION DETAIL

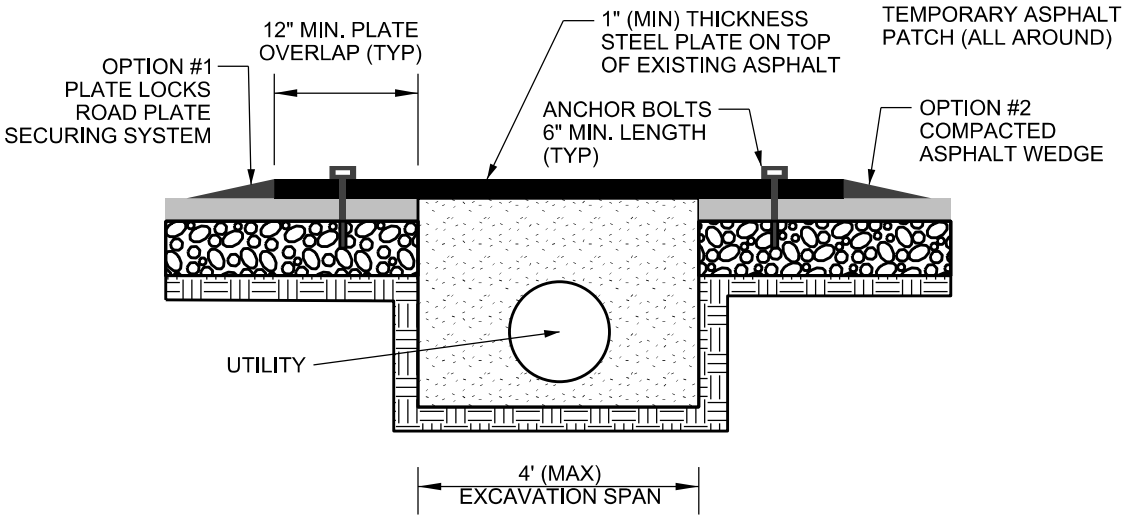

TYPE 2 INSTALLATION DETAIL

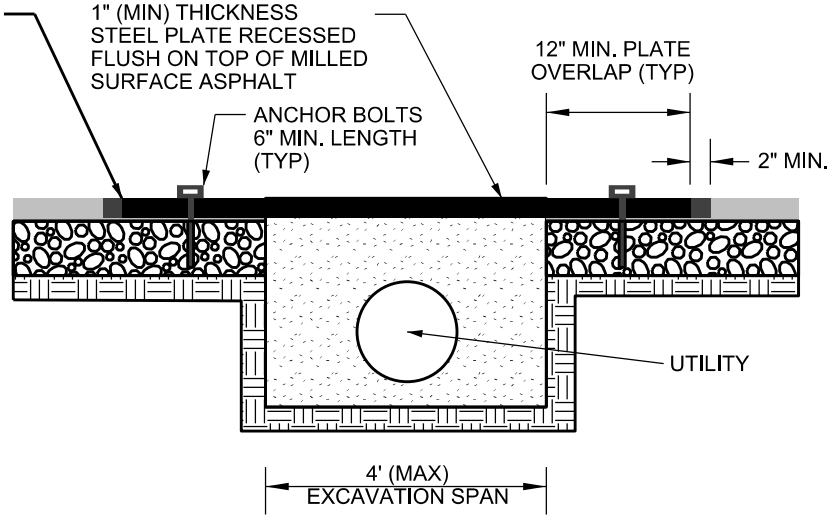

NOTES:

1. ALL ROAD PLATES MUST BE ACCOMPANIED BY A VALID RIGHT-OF-WAY PERMIT.
2. TYPE 1 INSTALLATIONS ARE FOR USE ON ROADWAYS WITH A POSTED SPEED LIMIT UNDER 35 MPH.
3. TYPE 2 INSTALLATIONS ARE FOR USE ON ROADWAYS WITH A POSTED SPEED LIMIT ABOVE 35 MPH.
4. ALL ROAD PLATE INSTALLATIONS SHALL BE APPROVED BY THE INSPECTOR PRIOR TO ALLOWING PUBLIC TRAFFIC.
5. ALL ROAD PLATE INSTALLATIONS, LIABILITY AND MAINTENANCE ARE THE RESPONSIBILITY OF THE CONTRACTOR
6. METAL PLATES SHALL BE IDENTIFIED WITH A 24" HIGH STENCILED TEXT OF THE CONTRACTOR NAME OR DESIGNATED ABBREVIATION AND A 6" HIGH STENCILED TEXT OF THE CONTRACTORS AFTER -HOURS 24/7 CONTACT PHONE NUMBER. ANY MARKING DEEMED UNREADABLE MUST BE REPAINTED. SEE DETAIL T-40.01.2
7. METAL PLATES WILL HAVE WHITE REFLECTIVE MARKING TAPE ON ALL FOUR CORNERS OF EACH END OF A TRENCH. THESE PLATES DESIGNATE THE BEGINNING AND END OF THE EXCAVATION. THE REFLECTIVE TAPE WILL BE DURABLE ENOUGH TO WITHSTAND TRAFFIC. ANY PEELING TAPE DEEMED UNREADABLE MUST BE REPLACED IMMEDIATELY. SEE DETAIL T-40.01.2.
8. WARNING SIGNS ADVISING MOTORISTS THAT THEY SHOULD EXPECT TO ENCOUNTER METAL PLATES SHALL BE PLACED AT PPROXIMATELY 100 FEET, IN ADVANCE OF THE METAL PLATE LOCATION THE "BUMP" OR "STEEL PLATE AHEAD" SHALL BE USED. SEE DETAIL T-40.01.2
9. PLATES THAT ARE LEFT OVERNIGHT WILL REQUIRE THAT THE WARNING SIGN BE SUPPLEMENTED WITH A LOW-INTENSITY-FLASHING WARNING LIGHT MOUNTED ON OR ADJACENT TO THE ADVANCE WARNING SIGNAGE.
10. FAILURE TO FOLLOW THE STEPS OUTLINED ABOVE WILL RESULT IN STOP WORK ORDERS, CITATIONS AND FINES TO THE PERMITTEE OR CONTRACTOR WORKING WITHOUT A VALID PERMIT. ROAD PLATES REMOVED OR REPAIRED BY THE CITY WILL RESULT IN STOP WORK ORDERS, CITATIONS AND FINES.
11. PAVEMENT MUST BE RESTORED TO THE PREVIOUS OR BETTER CONDITION ONCE THE PLATE HAS BEEN REMOVED.

CITY OF RALEIGH
STANDARD DETAIL

REVISIONS
DATE: 08/2023

DATE: 8/2023
NOT TO SCALE

STEEL ROAD PLATE

T-40.01.1