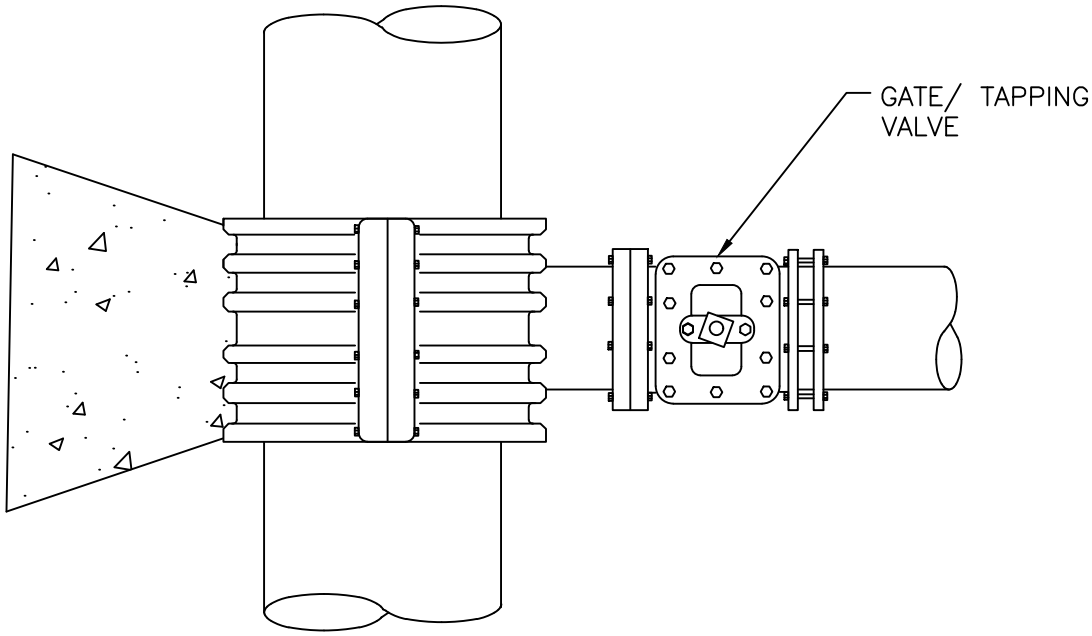

TOP VIEW

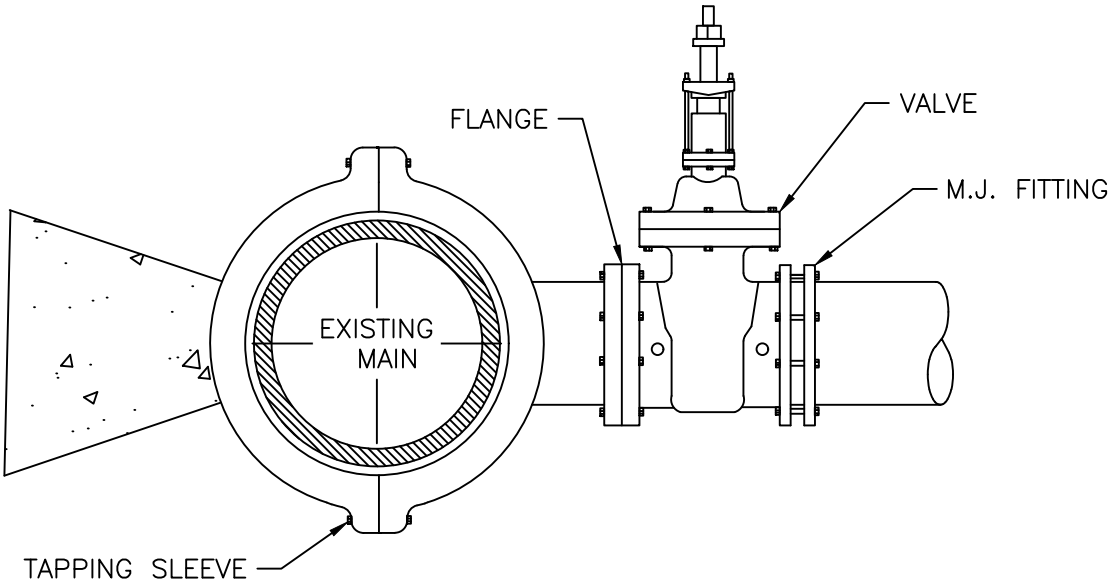

SIDE VIEW

NOTES:

1. CONCRETE SHALL NOT CONTACT BOLTS OR ENDS OF MECHANICAL JOINT FITTINGS.
2. SEE DETAIL R–7 & R–8 (REACTION BLOCK TABLES) FOR AREA OF CONCRETE REQUIRED.
3. 3,000 PSI SOLID CONCRETE SHALL BE USED AS FOOTING FOR DUCTILE IRON PIPE.

CITY OF RALEIGH STANDARD DETAIL	
REVISIONS	DATE: 01/18/2025 NOT TO SCALE
	4"–24" TAPPING SLEEVE AND VALVE ASSEMBLY
	R-11