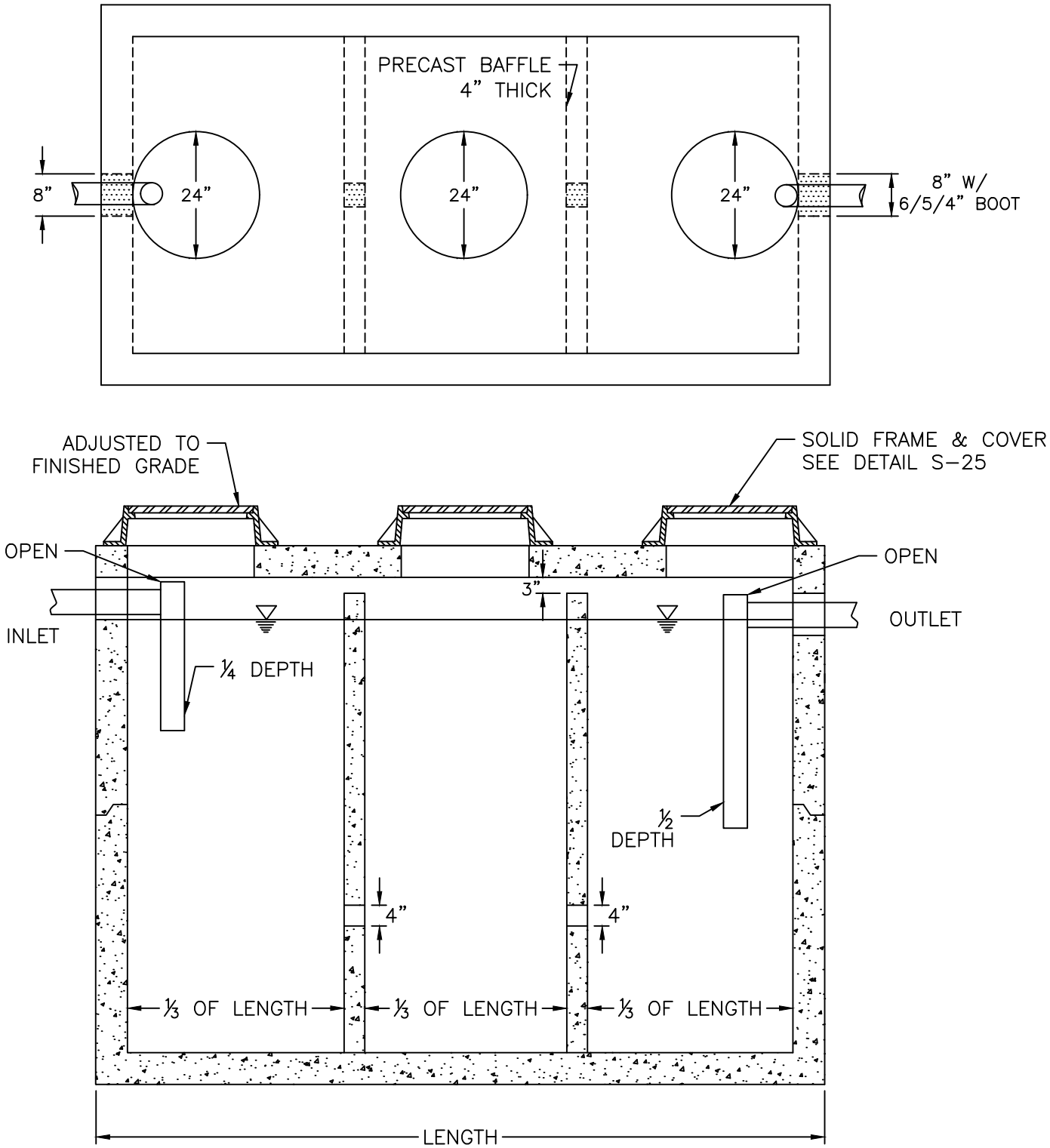

NOTES:

1. REINFORCEMENT: H-20 BRIDGE LOADING (TRAFFIC RATED).
2. CONCRETE: 4,000 PSI @ 28 DAYS.
3. EARTHCOVER: 0' TO 5' MAX.
4. HDPE ALLOWED IN LIEU OF CONCRETE. MEET SAME LOADING REQUIREMENTS.

CITY OF RALEIGH STANDARD DETAIL	
REVISIONS	DATE: 01/18/2025 NOT TO SCALE
	1,000 GALLON OIL-WATER-SAND SEPARATOR
	S-40A