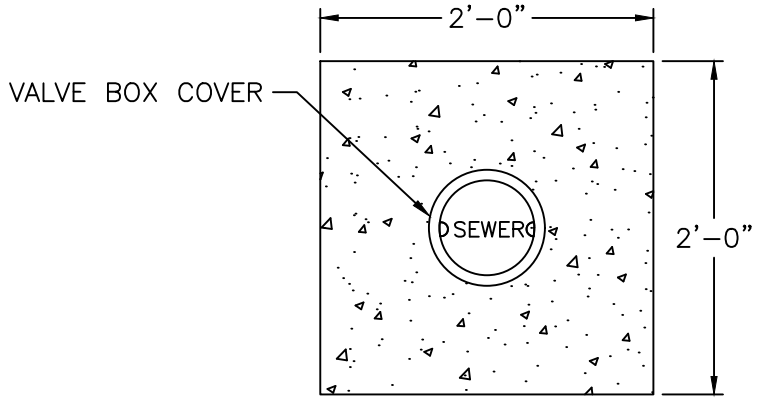

PLAN VIEW

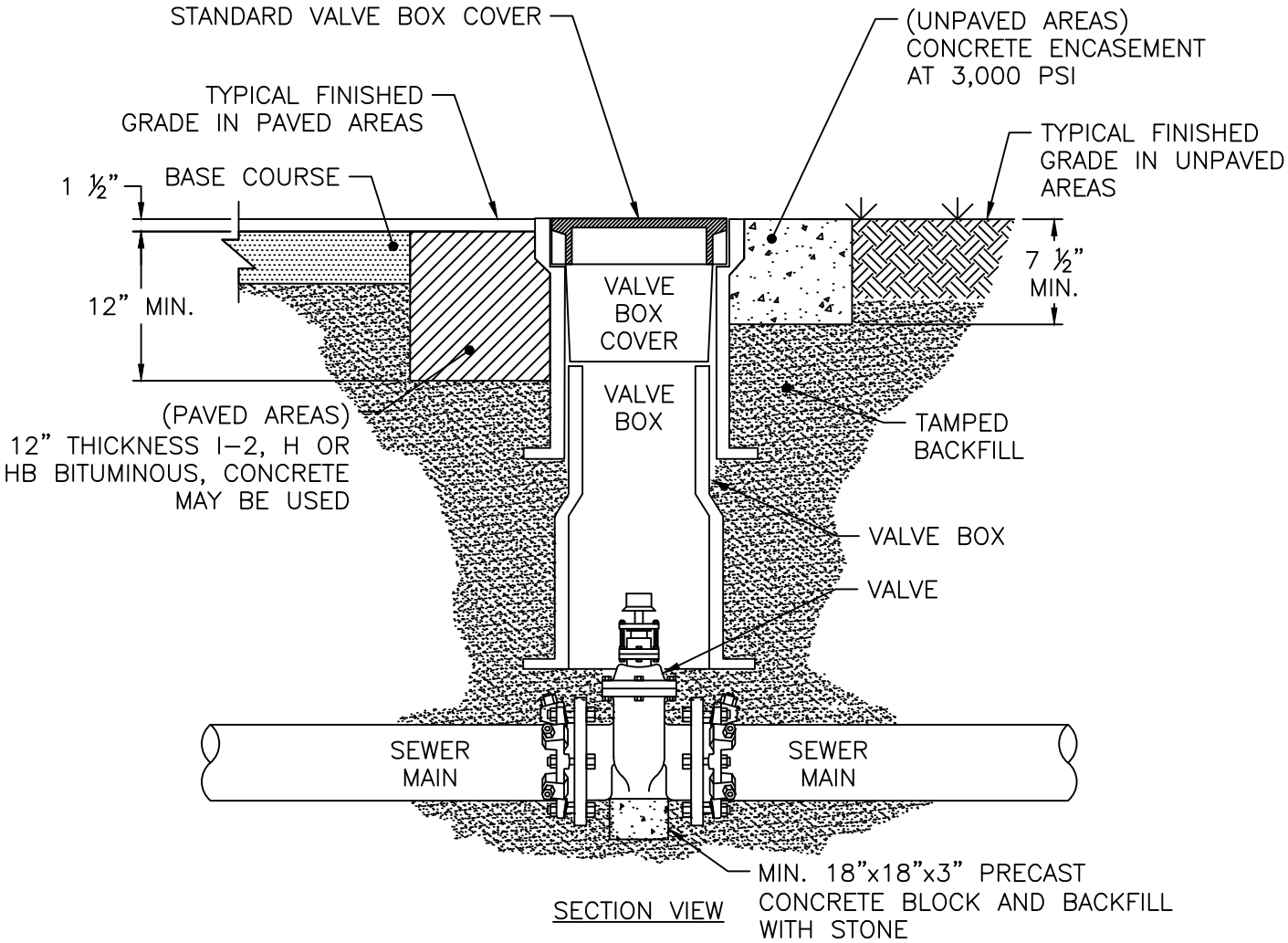

SECTION VIEW

NOTES:

1. ONLY MANUFACTURED VALVE BOX EXTENSIONS SHALL BE ALLOWED.
2. VALVE OPERATING NUT MUST BE EXTENDED SO THAT THE DEPTH IS NO GREATER THAN 5' FROM THE SURFACE USING A MANUFACTURER APPROVED EXTENSION KIT.
3. PRECAST CONCRETE ENCASEMENT IS ALLOWED OUTSIDE OF PAVED AREAS.
4. VALVE BOX SHOULD NOT CONTACT MAIN OR VALVE.

CITY OF RALEIGH STANDARD DETAIL	
REVISIONS	DATE: 01/18/2025 NOT TO SCALE
	SEWER VALVE AND BOX INSTALLATION
	S-57