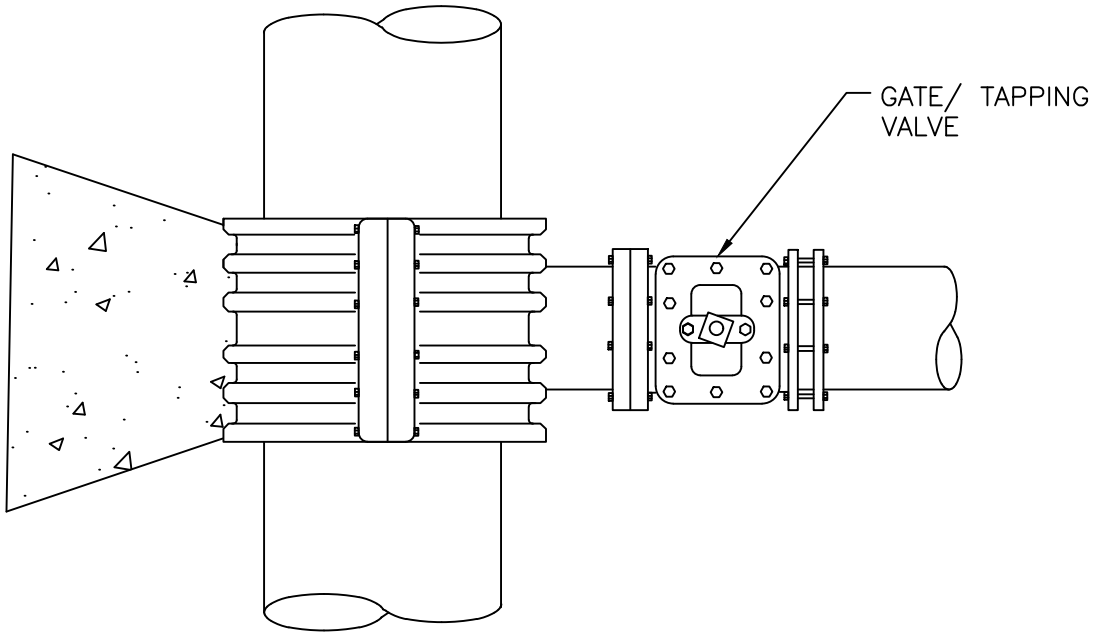

TOP VIEW

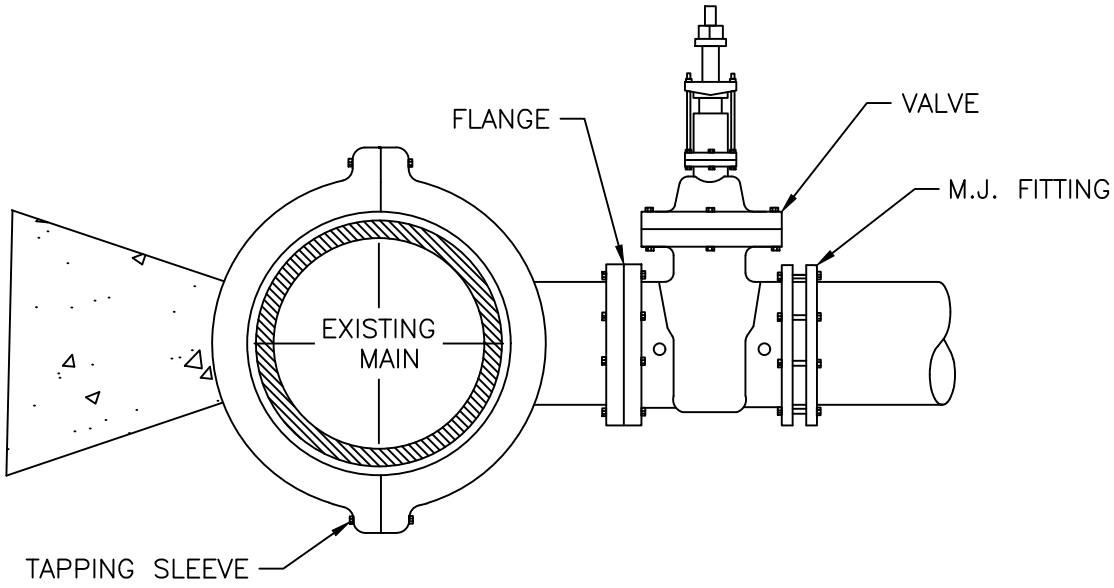

SIDE VIEW

NOTES:

1. CONCRETE SHALL NOT CONTACT BOLTS OR ENDS OF MECHANICAL JOINT FITTINGS.
2. SEE DETAIL W–10 & W–11 (REACTION BLOCK TABLES) FOR AREA OF CONCRETE REQUIRED.
3. 3,000 PSI SOLID CONCRETE SHALL BE USED AS FOOTING FOR DUCTILE IRON PIPE.
4. FULL CIRCUMFERENCE SLEEVE, STAINLESS STEEL MATERIAL REQUIRED.

CITY OF RALEIGH

STANDARD DETAIL

REVISIONS	DATE: 01/18/2025 NOT TO SCALE
	4"–24" STANDARD TAPPING SLEEVE AND VALVE ASSEMBLY
	W-14