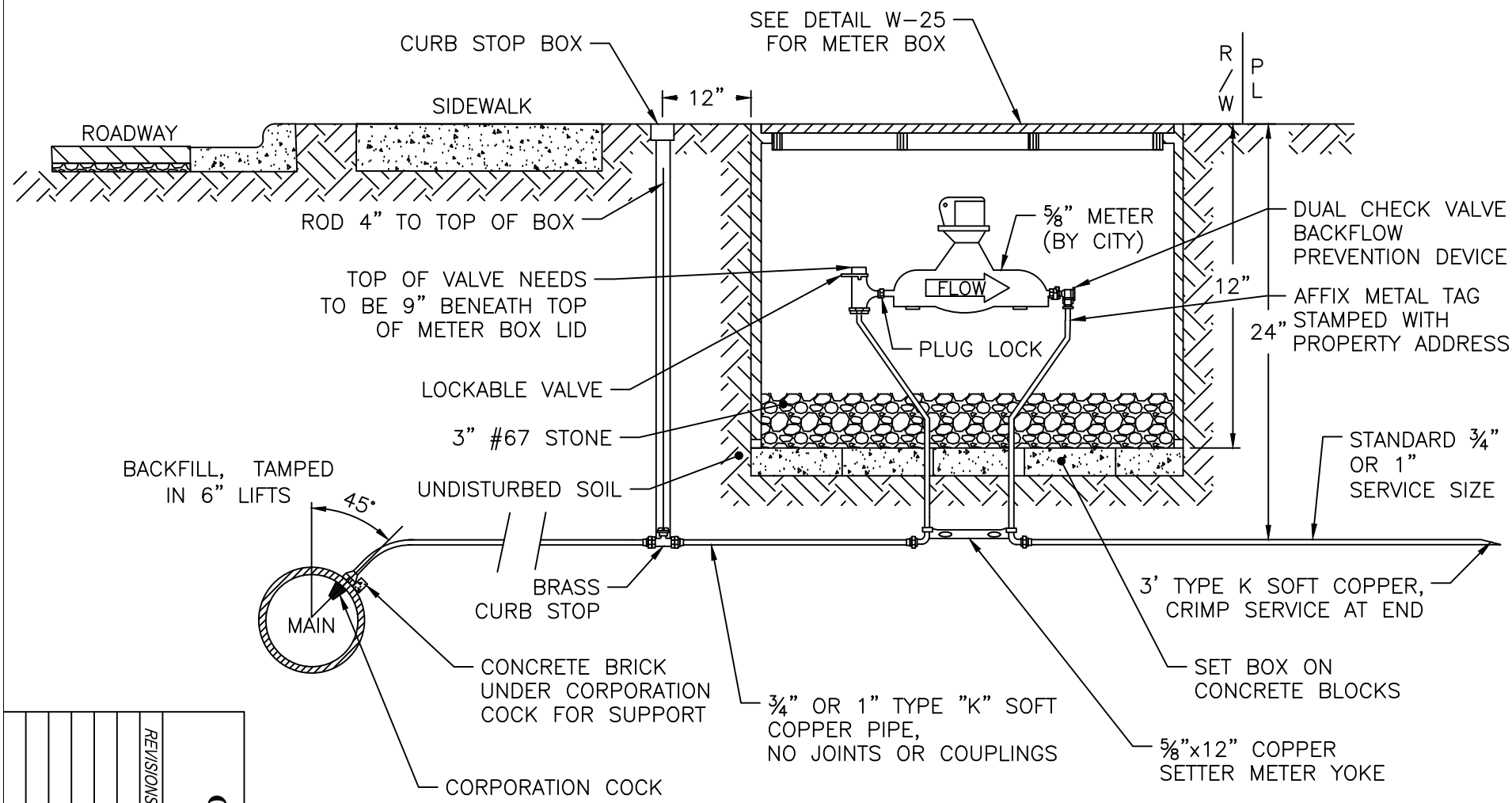

NOTES:

1. METER TO BE PROVIDED BY RALEIGH WATER.
2. DIRECT TAP ALLOWED ON MAINS NO LARGER THAN 16" LINE,
3. METER BOX TO BE LOCATED IN R/W ADJACENT TO PROPERTY OR IN APPROVED EASEMENT ADJACENT TO R/W.
4. WHEN THE GRADE CHANGES ON EXISTING SERVICES, A COPPER RESETTER CAN BE USED TO ADJUST TO GRADE. COPPER RESETTERS ARE PROHIBITED ON NEW SERVICES.
5. CURB STOP BOX SHALL HAVE PLUG STYLE LID WITH PENTAGON BOLT, 1-1/4" STEEL UPPER SECTION, AND ARCH STYLE BASE. STEEL STATIONARY ROD TO BE PROVIDED FOR CURB STOP OPERATION.

CITY OF RALEIGH
STANDARD DETAIL

REVISIONS

DATE: 01/18/2025

NOT TO SCALE

STANDARD 3/4" & 1" WATER SERVICE INSTALLATION

W-23