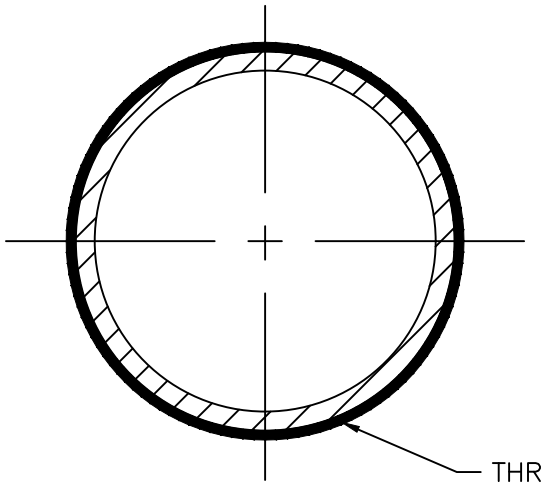

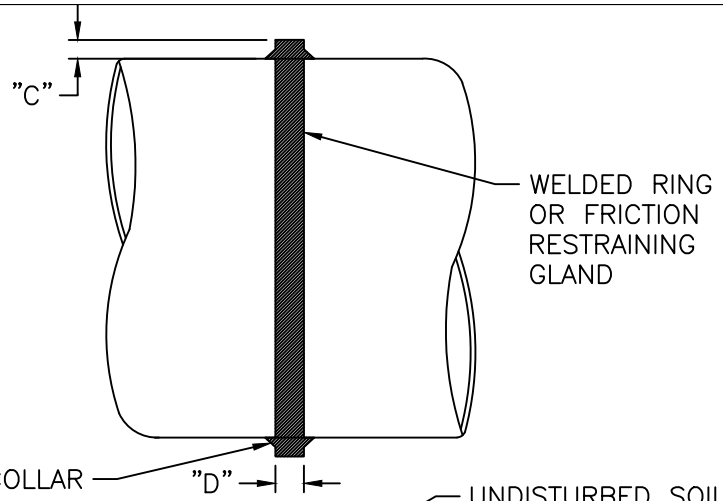

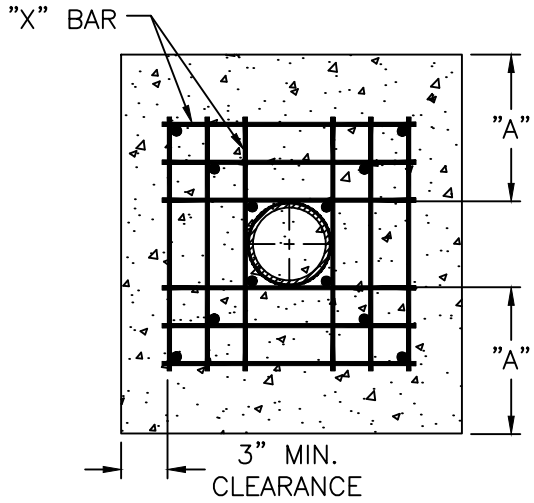

SECTION

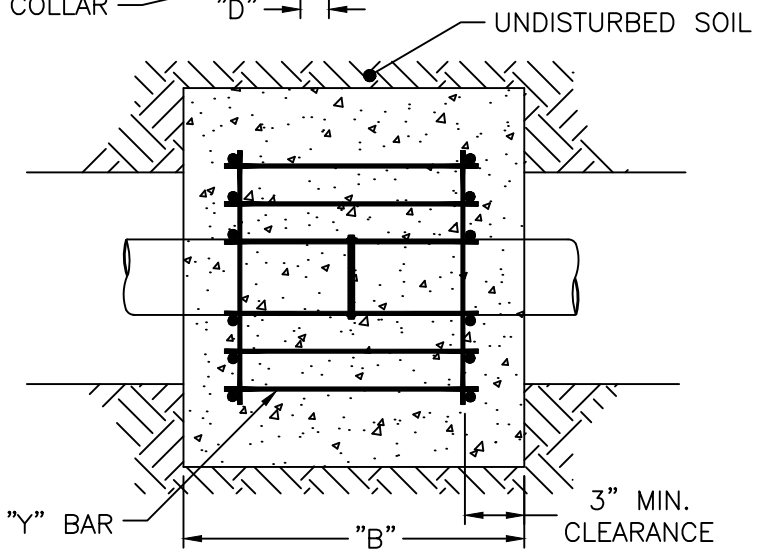

PLAN VIEW

REINFORCING REQUIREMENTS

I.D. PIPE	REBAR SIZE	"X" BAR LENGTH	"X" BAR WEIGHT	"Y" BAR LENGTH	"Y" BAR WEIGHT	NO. REQUIRED
6"–36"	#5	2'–2"+ O.D. PIPE	1.043 LBS/FT	1'–1"	1.1 LBS. EACH	X–24 Y–12
≥48"	#6	3'–0"+ O.D. PIPE	1.502 LBS/FT	1'–3"	1.9 LBS. EACH	X–24 Y–12

THRUST COLLAR AND THRUST SCHEDULE

I.D. PIPE	"A"	"B"	"C"	"D"
6"–16"	1'–4"	1'–7"	2"	⅜"
20"–24"	1'–4"	1'–7"	3"	½"
30"–36"	1'–4"	1'–7"	4"	⅝"
≥48"	1'–8"	1'–9"	6"	⅞"

NOTES:
1. SEE DETAIL W–9 FOR THRUST BLOCK LOCATIONS.
2. CONCRETE SHALL BE 3,000 PSI AND TRANSIT MIXED.
3. REINFORCING BARS SHALL BE DEFORMED AND TIED TOGETHER.
4. TRENCH BOTTOM WIDTH IN VICINITY OF THRUST BLOCK INSTALLATION SHALL BE THE MINIMUM WIDTH AS SHOWN ON DETAIL W–3.
5. BACKFILL TAMPED IN 6" LIFTS, SEE DETAIL W–3.
6. THRUST COLLAR MUST BE FACTORY WELDED ON BOTH SIDES ALONG BOTH EDGES OF COLLAR AROUND CIRCUMFERENCE.

CITY OF RALEIGH
STANDARD DETAIL

REVISIONS	DATE: 01/18/2025 NOT TO SCALE
	THRUST BLOCKING DESIGN DATA FOR WATER MAINS
	W-7