PAVEMENT MARKING LINES

T8	-	THERMOPLASTIC	(4", 90 MIL)	2FT-6FT/SP WHITE MINISKIP
TA	-	THERMOPLASTIC	(4", 90 MIL)	WHITE EDGELINE
TI	-	THERMOPLASTIC	(4", 90 MIL)	YELLOW DOUBLE CENTER
TO	-	THERMOPLASTIC	(8", 90 MIL)	WHITE DIAGONAL

PAVEMENT MARKING LINES

UJ	-	THERMOPLASTIC	(90 MIL)	BICYCLE SYMBOL
UK	-	THERMOPLASTIC	(90 MIL)	BICYCLE STRAIGHT ARROW

* Measurements are from face of curb.
Place arrows per NCDOT Std Drawings 1205

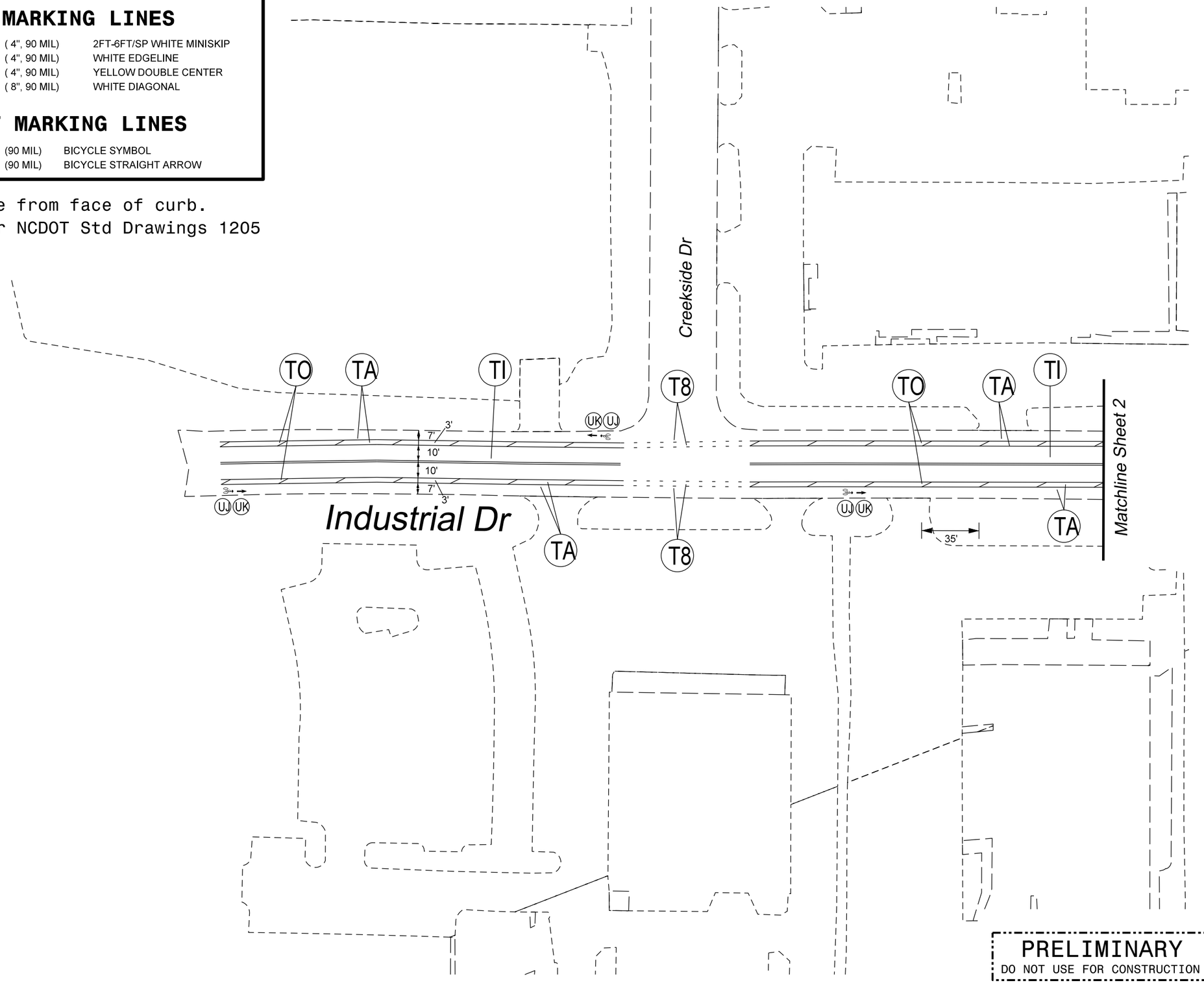

PRELIMINARY
DO NOT USE FOR CONSTRUCTION

CITY OF RALEIGH
DEPARTMENT OF TRANSPORTATION

Industrial Dr
Beg Pvmt #2700
to Front St

2020 Street Resurfacing
Pavement Marking Plans

DATE:	3/2020
CADD TECH:	BEC
CHECKED BY:	RMD

REVISIONS

NO.	DATE

SCALES
HSCALE 1"=60'
VSCALE

SHEET NO.
1

PAVEMENT MARKING LINES

T2	-	THERMOPLASTIC	(24", 90 MIL)	WHITE STOPBAR
T3	-	THERMOPLASTIC	(24", 90 MIL)	WHITE CROSSWALK LINE
T8	-	THERMOPLASTIC	(4", 90 MIL)	2FT-6FT/SP WHITE MINISKIP
TA	-	THERMOPLASTIC	(4", 90 MIL)	WHITE EDGELINE
TD	-	THERMOPLASTIC	(4", 90 MIL)	3FT-9FT/SP WHITE MINISKIP
TE	-	THERMOPLASTIC	(4", 90 MIL)	WHITE SOLID LANE LINE
TI	-	THERMOPLASTIC	(4", 90 MIL)	YELLOW DOUBLE CENTER
TO	-	THERMOPLASTIC	(8", 90 MIL)	WHITE DIAGONAL

PAVEMENT MARKING LINES

UA	-	THERMOPLASTIC	(90 MIL)	LEFT TURN ARROW
UE	-	THERMOPLASTIC	(90 MIL)	COMBO RIGHT/STRAIGHT ARROW
UJ	-	THERMOPLASTIC	(90 MIL)	BICYCLE SYMBOL
UK	-	THERMOPLASTIC	(90 MIL)	BICYCLE STRAIGHT ARROW

* Measurements are from face of curb.
Place arrows per NCDOT Std Drawings 1205

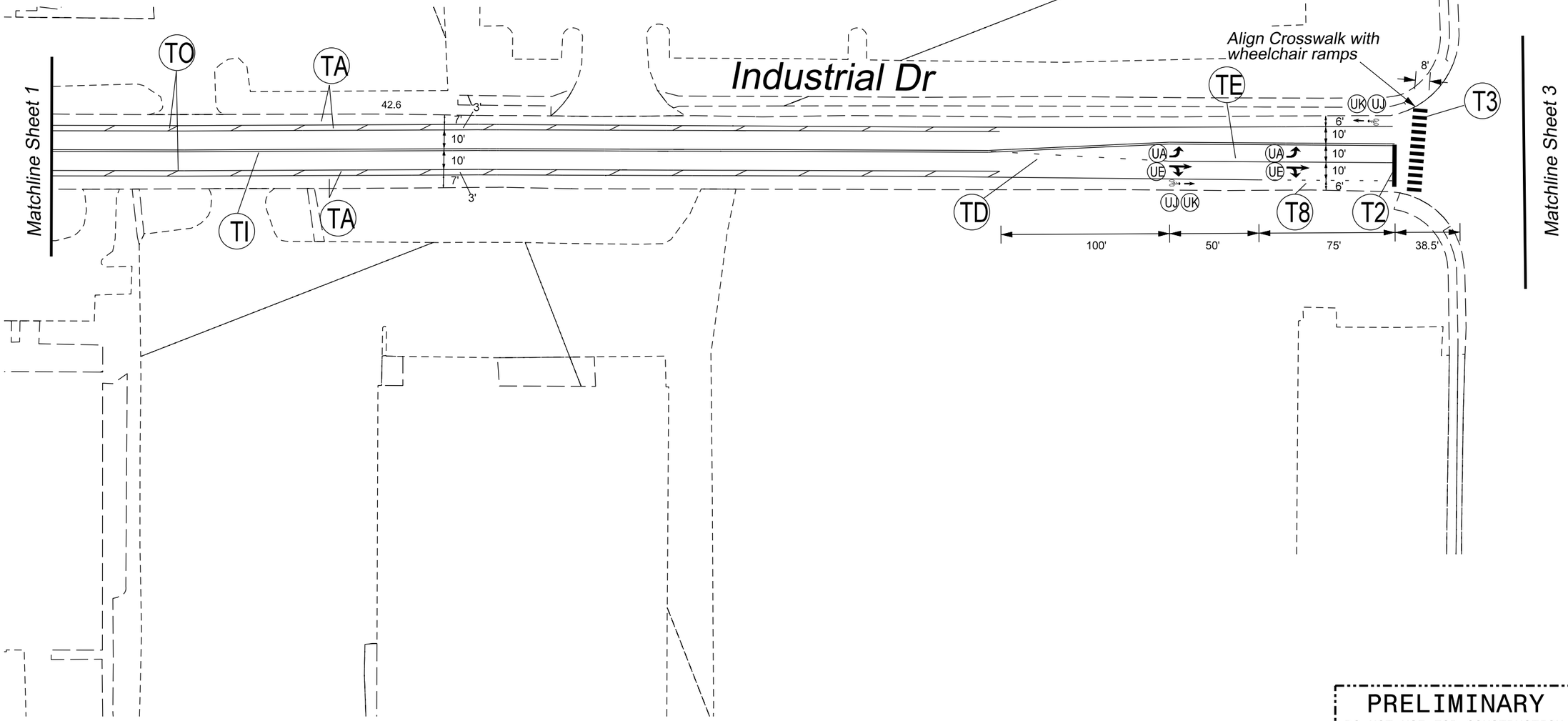

PRELIMINARY
DO NOT USE FOR CONSTRUCTION

CITY OF RALEIGH
DEPARTMENT OF TRANSPORTATION

Industrial Dr
Beg Pvmt #2700 to Front St

2020 Street Resurfacing
Pavement Marking Plans

DATE:	3/2020
CADD TECH:	BEC
CHECKED BY:	RMD

REVISIONS

NO.	DATE

SCALES
HSCALE 1"=60'
VSCALE

SHEET NO.
2

PAVEMENT MARKING LINES

T2	-	THERMOPLASTIC	(24", 90 MIL)	WHITE STOPBAR
T8	-	THERMOPLASTIC	(4", 90 MIL)	2FT-6FT/SP WHITE MINISKIP
TA	-	THERMOPLASTIC	(4", 90 MIL)	WHITE EDGELINE
TD	-	THERMOPLASTIC	(4", 90 MIL)	3FT-9FT/SP WHITE MINISKIP
TE	-	THERMOPLASTIC	(4", 90 MIL)	WHITE SOLID LANE LINE
TI	-	THERMOPLASTIC	(4", 90 MIL)	YELLOW DOUBLE CENTER
TO	-	THERMOPLASTIC	(8", 90 MIL)	WHITE DIAGONAL

PAVEMENT MARKING LINES

UA	-	THERMOPLASTIC	(90 MIL)	LEFT TURN ARROW
UE	-	THERMOPLASTIC	(90 MIL)	COMBO RIGHT/STRAIGHT ARROW
UJ	-	THERMOPLASTIC	(90 MIL)	BICYCLE SYMBOL
UK	-	THERMOPLASTIC	(90 MIL)	BICYCLE STRAIGHT ARROW

* Measurements are from face of curb.
Place arrows per NCDOT Std Drawings 1205

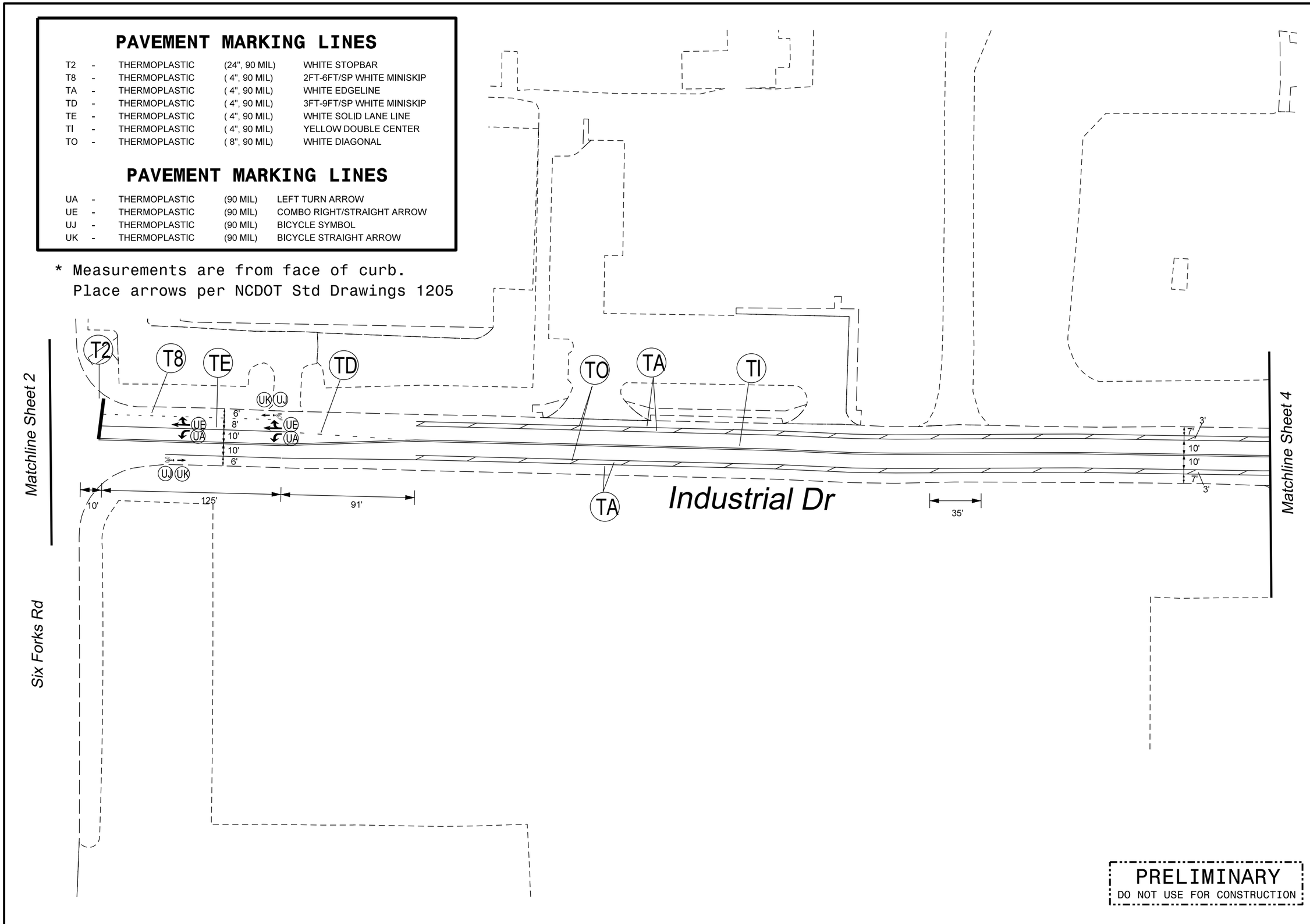

PRELIMINARY
DO NOT USE FOR CONSTRUCTION

CITY OF RALEIGH
DEPARTMENT OF TRANSPORTATION

Industrial Dr
Beg Pvmt #2700 to Front St

2020 Street Resurfacing
Pavement Marking Plans

DATE:	3/2020
CADD TECH:	BEC
CHECKED BY:	RMD

REVISIONS

NO.	DATE

SCALES
HSCALE 1"=60'
VSCALE

SHEET NO.
3

PAVEMENT MARKING LINES

T8	-	THERMOPLASTIC	(4", 90 MIL)	2FT-6FT/SP WHITE MINISKIP
TA	-	THERMOPLASTIC	(4", 90 MIL)	WHITE EDGELINE
TI	-	THERMOPLASTIC	(4", 90 MIL)	YELLOW DOUBLE CENTER
TO	-	THERMOPLASTIC	(8", 90 MIL)	WHITE DIAGONAL

PAVEMENT MARKING LINES

UJ	-	THERMOPLASTIC	(90 MIL)	BICYCLE SYMBOL
UK	-	THERMOPLASTIC	(90 MIL)	BICYCLE STRAIGHT ARROW

* Measurements are from face of curb.
Place arrows per NCDOT Std Drawings 1205

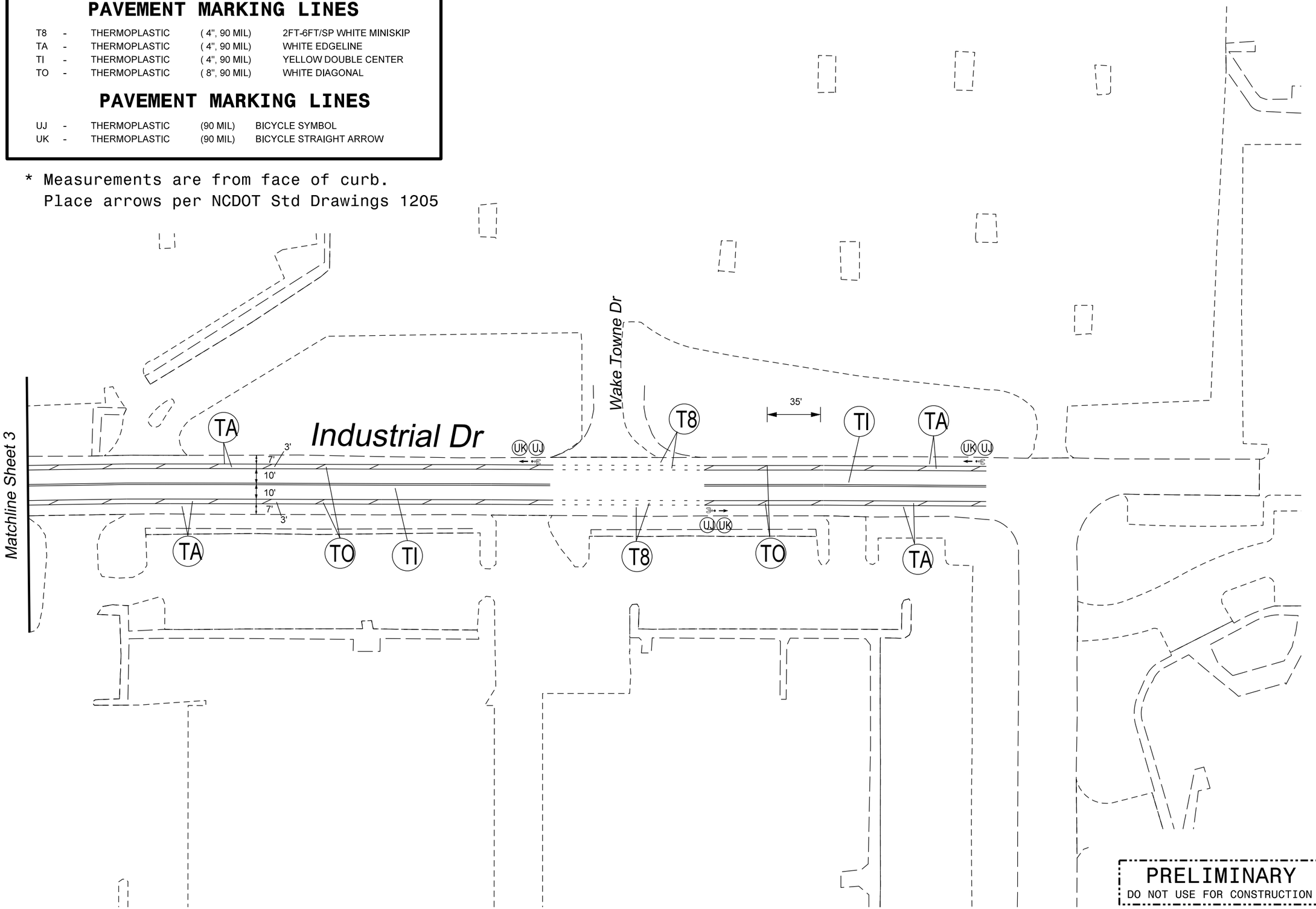

PRELIMINARY
DO NOT USE FOR CONSTRUCTION

CITY OF RALEIGH
DEPARTMENT OF TRANSPORTATION

Industrial Dr
Beg Pvmt #2700
to Front St

2020 Street Resurfacing
Pavement Marking Plans

DATE:	3/2020
CADD TECH:	BEC
CHECKED BY:	RMD

REVISIONS

NO.	DATE

SCALES
HSCALE 1"=60'
VSCALE

SHEET NO.
4