STATIONS SHEET INDEX

ARCHITECTURAL
SA-000 STATIONS MATRIX
SA-001 CODE SUMMARY - STATION TYPE A - URBAN CORE
SA-002 CODE SUMMARY - STATION TYPE B - SUB-URBAN
SA-003 CODE SUMMARY - STATION TYPE C - INTERMODAL
SA-004 CODE SUMMARY - STATION TYPE D - SPLIT ISLAND
SA-005 CODE SUMMARY - STATION TYPE E - PERIPHERAL

SA-100 GO RALEIGH STATION
SA-110 EDENTON AT BLOUNT
SA-111 MORGAN AT BLOUNT
SA-120 EDENTON AT SWAIN
SA-121 NEW BERN AT SWAIN
SA-130 EDENTON AT TARBORO
SA-131 NEW BERN AT TARBORO
SA-140 RALEIGH BLVD INBOUND
SA-141 RALEIGH BLVD OUTBOUND
SA-150 KING CHARLES INBOUND
SA-151 KING CHARLES OUTBOUND
SA-160 MEDICAL DISTRICT INBOUND
SA-161 MEDICAL DISTRICT OUTBOUND
SA-170 TRAWICK INBOUND
SA-171 TRAWICK OUTBOUND
SA-180 CORPORATION PARKWAY INBOUND
SA-181 CORPORATION PARKWAY OUTBOUND
SA-190 EAST RALEIGH
SA-191 NEW HOPE ROAD

SA-200 STATION TYPE A - URBAN CORE
SA-201 STATION TYPE A - URBAN CORE
SA-202 TYPICAL CANOPY SECTIONS
SA-210 STATION TYPE B - SUB-URBAN
SA-211 STATION TYPE B - SUB-URBAN
SA-220 STATION TYPE C - INTERMODAL
SA-221 STATION TYPE C - INTERMODAL
SA-230 STATION TYPE D - SPLIT ISLAND
SA-231 STATION TYPE D - SPLIT ISLAND
SA-232 SPLIT ISLAND CANOPY SECTIONS
SA-240 STATION TYPE E - PERIPHERAL 1
SA-241 STATION TYPE E - PERIPHERAL 1
SA-242 PERIPHERAL 1 CANOPY WALL SECTIONS
SA-243 STATION TYPE E - PERIPHERAL 2
SA-244 STATION TYPE E - PERIPHERAL 2

SA-300 TYPICAL CANOPY DETAILS
SA-301 TYPICAL FREESTANDING PARTITION DETAILS
SA-302 TYPICAL RAILING DETAILS
SA-303 TYPICAL WINDSCREEN ELEVATIONS
SA-304 TYPICAL WINDSCREEN DETAILS
SA-305 TYPICAL PLATFORM LAYOUTS - FOR REFERENCE ONLY
SA-306 STATION AMENITY DETAILS
SA-307 TYPICAL PLATFORM DETAILS
SA-400 PYLON ELEMENT
SA-500 SIGNAGE

STRUCTURAL
SS-000 STRUCTURAL GENERAL NOTES
SS-001 STRUCTURAL GENERAL NOTES, SYMBOLS, AND ABBREVIATIONS
SS-200 STATION TYPE A - URBAN CORE - STRUCTURAL
SS-202 TYPICAL CANOPY SECTIONS - STRUCTURAL
SS-210 STATION TYPE B - SUB URBAN - STRUCTURAL
SS-220 STATION TYPE C - INTERMODAL - STRUCTURAL
SS-230 STATION TYPE D - SPLIT ISLAND - STRUCTURAL
SS-232 STATION TYPE D - SPLIT ISLAND - STRUCTURAL SECTIONS
SS-240 STATION TYPE E - PERIPHERAL 1 - STRUCTURAL
SS-242 STATION TYPE E - PERIPHERAL 1 - STRUCTURAL SECTIONS
SS-243 STATION TYPE E - PERIPHERAL 2 - STRUCTURAL
SS-300 TYPICAL STATION DETAILS - STRUCTURAL
SS-301 TYPICAL STATION DETAILS - STRUCTURAL
SS-302 TYPICAL STATION DETAILS - STRUCTURAL
SS-303 TYPICAL STATION DETAILS - STRUCTURAL
SS-310 STRUCTURAL STEEL COLUMN SCHEDULE
SS-311 TYPICAL CANOPY DETAILS - STRUCTURAL

ELECTRICAL
SE-001 ELECTRICAL - GENERAL NOTES AND LEGENDS
SE-100 GO RALEIGH STATION - SITE PLAN - ELECTRICAL
SE-110 EDENTON AT BLOUNT - SITE PLAN - ELECTRICAL
SE-111 MORGAN AT BLOUNT - SITE PLAN - ELECTRICAL
SE-120 EDENTON AT SWAIN - SITE PLAN - ELECTRICAL
SE-121 NEW BERN AT SWAIN - SITE PLAN - ELECTRICAL
SE-130 EDENTON AT TARBORO - SITE PLAN - ELECTRICAL
SE-131 NEW BERN AT TARBORO - SITE PLAN - ELECTRICAL
SE-140 RALEIGH BLVD - INBOUND - SITE PLAN - ELECTRICAL
SE-141 RALEIGH BLVD - OUTBOUND - SITE PLAN - ELECTRICAL
SE-150 KING CHARLES- INBOUND - SITE PLAN - ELECTRICAL
SE-151 KING CHARLES - OUTBOUND - SITE PLAN - ELECTRICAL
SE-160 MEDICAL DISTRICT - INBOUND - SITE PLAN - ELECTRICAL
SE-161 MEDICAL DISTRICT - OUTBOUND - SITE PLAN - ELECTRICAL
SE-170 TRAWICK - INBOUND - SITE PLAN - ELECTRICAL
SE-171 TRAWICK - OUTBOUND - SITE PLAN - ELECTRICAL
SE-180 CORPORATION PARKWAY - INBOUND - SITE PLAN - ELECTRICAL
SE-181 CORPORATION PARKWAY - OUTBOUND - SITE PLAN - ELECTRICAL
SE-190 EAST RALEIGH - SITE PLAN - ELECTRICAL
SE-191 NEW HOPE ROAD - SITE PLAN - ELECTRICAL
SE-200 STATION TYPE A - URBAN CORE - ELECTRICAL
SE-210 STATION TYPE B - SUB-URBAN - ELECTRICAL
SE-220 STATION TYPE C - INTERMODAL - ELECTRICAL
SE-230 STATION TYPE D - SPLIT ISLAND - ELECTRICAL
SE-240 STATION TYPE E - PERIPHERAL - ELECTRICAL
SE-301 ELECTRICAL - ELEVATIONS
SE-501 ELECTRICAL - DETAILS
SE-601 ELECTRICAL - SCHEDULES
SE-602 ELECTRICAL - SCHEDULES
SE-603 RISER DIAGRAMS

STATION MATRIX

STATION INFO					PLATFORM ELEMENTS							STATION AREA ELEMENTS				
STATION ID	ABR	STATION NAME	SIGNAGE NAME	STATION TYPOLOGY	PLATFORM CONFIGURATION	ACCESS	PLATFORM WIDTH	PLATFORM LENGTH	PLATFORM HEIGHT	REAR EDGE CONDITION		MULTI-USE TRAIL ACCESS	SIGNAGE TOTEM		BICYCLE PARKING	
										TYPE	ACCESS		LOCATION	NUMBER	TYPE	NUMBER
001	RAL	GO RALEIGH STATION	GORALEIGH	URBAN CORE	CURBSIDE	SIDEWALK (2 RAMPS)	10'-0"	75'-0"	14"	OPEN	ACCESSIBLE	NO	SITE	1	.	.
002	BSN	EDENTON AT BLOUNT	EDENTON AT BLOUNT	URBAN CORE	CURBSIDE	SIDEWALK (2 RAMPS)	10'-0"	75'-0"	14"	OPEN	ACCESSIBLE	NO	SITE	1	.	.
003	BSS	MORGAN AT BLOUNT	MORGAN AT BLOUNT	URBAN CORE	CURBSIDE	SIDEWALK (2 RAMPS)	9'-0"	75'-0"	14"	OPEN	ACCESSIBLE	NO	SITE	1	.	.
004	SSN	EDENTON AT SWAIN	EDENTON AT SWAIN	SUBURBAN	CURBSIDE	SIDEWALK (2 RAMPS)	10'-0"	75'-0"	14"	SCREENED	NO	NO	SITE	1	.	.
005	SSS	NEW BERN AT SWAIN	NEW BERN AT SWAIN	INTERMODAL	CURBSIDE	SIDEWALK (2 RAMPS)	10'-0"	75'-0"	14"	OPEN	ACCESSIBLE	YES	SITE	1	RING	2
006	TSN	EDENTON AT TARBORO	EDENTON AT TARBORO	SUBURBAN	CURBSIDE	SIDEWALK (2 RAMPS)	10'-0"	75'-0"	14"	SCREENED	NO	NO	SITE	1	.	.
007	TSS	NEW BERN AT TARBORO	NEW BERN AT TARBORO	INTERMODAL	CURBSIDE	SIDEWALK (2 RAMPS)	10'-0"	75'-0"	14"	OPEN	ACCESSIBLE	YES	SITE	1	RING	2
008	RBN	RALEIGH BLVD INBOUND	RALEIGH BLVD	SPLIT ISLAND	MEDIAN ISLAND (IN LANE)	CROSSWALK (1 RAMP)	10'-0"	75'-0"	14"	OPEN	ACCESSIBLE	NO	SITE	1	.	.
009	RBS	RALEIGH BLVD OUTBOUND	RALEIGH BLVD	SPLIT ISLAND	MEDIAN ISLAND (IN LANE)	CROSSWALK (1 RAMP)	10'-0"	75'-0"	14"	OPEN	ACCESSIBLE	NO	SITE	1	RING	5
010	KCN	KING CHARLES INBOUND	KING CHARLES	SPLIT ISLAND	MEDIAN ISLAND (IN LANE)	CROSSWALK (1 RAMP)	10'-0"	75'-0"	14"	OPEN	ACCESSIBLE	NO	SITE	1	.	.
011	KCS	KING CHARLES OUTBOUND	KING CHARLES	SPLIT ISLAND	MEDIAN ISLAND (IN LANE)	CROSSWALK (1 RAMP)	10'-0"	75'-0"	14"	OPEN	ACCESSIBLE	NO	SITE	1	RING	5
012	MDN	MEDICAL DISTRICT INBOUND	MEDICAL DISTRICT	SPLIT ISLAND	MEDIAN ISLAND (IN LANE)	CROSSWALK (1 RAMP)	10'-0"	75'-0"	14"	OPEN	ACCESSIBLE	NO	SITE	1	.	.
013	MDS	MEDICAL DISTRICT OUTBOUND	MEDICAL DISTRICT	SPLIT ISLAND	MEDIAN ISLAND (IN LANE)	CROSSWALK (1 RAMP)	10'-0"	75'-0"	14"	OPEN	ACCESSIBLE	NO	SITE	1	RING	5
014	TRN	TRAWICK INBOUND	TRAWICK	PERIPHERAL 1	CURBSIDE	SIDEWALK	.	.	6"	SCREENED	NO	NO	SITE	1	.	.
015	TRS	TRAWICK OUTBOUND	TRAWICK	PERIPHERAL 1	CURBSIDE	SIDEWALK	.	.	6"	SCREENED	NO	NO	SITE	1	.	.
016	CPN	CORPORATION PARKWAY INBOUND	CORPORATION PARKWAY	PERIPHERAL 1	CURBSIDE	SIDEWALK	.	.	6"	SCREENED	NO	NO	SITE	1	.	.
017	CPS	CORPORATION PARKWAY OUTBOUND	CORPORATION PARKWAY	PERIPHERAL 1	CURBSIDE	SIDEWALK	.	.	6"	SCREENED	NO	NO	SITE	1	.	.
018	NHN	EAST RALEIGH	EAST RALEIGH	PERIPHERAL 2	CURBSIDE	SIDEWALK (2 RAMPS)	10'-0"	75'-0"	14"	SCREENED	NO	NO	SITE	1	.	.
019	NHS	NEW HOPE ROAD	NEW HOPE ROAD	PERIPHERAL 2	CURBSIDE	SIDEWALK (2 RAMPS)	10'-0"	75'-0"	14"	SCREENED	NO	NO	SITE	1	.	.

NOTE: SEE SA-200 SERIES FOR FULL STATION AMENITIES AND PLACEMENT

1 SA-000 **STATIONS MATRIX**
NOT TO SCALE

neighboring concepts
NEIGHBORING CONCEPTS, PLLC
1635 West Trade Street, Suite 1A
Charlotte, North Carolina 28216
NC Cert. No: 51098

INCOMPLETE PLANS
DO NOT USE FOR R/W ACQUISITION

CITY OF RALEIGH
ENGINEERING SERVICES
DEPARTMENT

DOCUMENT NOT CONSIDERED FINAL UNLESS ALL SIGNATURES COMPLETED

STATIONS MATRIX

PROJECT:
WAKE BRT
NEW BERN AVE

DATE: 1/28/2022
SHEET BY: AMK
CHECKED BY: LAV

REVISIONS

NO.	DATE

SCALES

SA-000

1/27/2022 5:50:31 PM
BIM 360://SA01_Wake BRT/SA001_Wake BRT/SA001_Wake BRT_ROD_Arch_Central.rvt

2018 APPENDIX B

BUILDING CODE SUMMARY FOR ALL COMMERCIAL PROJECTS

(EXCEPT 1 AND 2-FAMILY DWELLINGS AND TOWNHOUSES)

PROJECT SUMMARY / ALTERNATIVE MEANS OF COMPLIANCE

BUILDING DESCRIPTION: **Bus Rapid Transit Passenger Station Type A - Urban Core Station**
Station is positioned along a sidewalk in an urban setting, and includes access from each end of the platform.
.

SCOPE OF WORK DETAILS: (If phased construction, please see plan submittal guidelines.) **Foundations, Structural Slabs, Canopies, Benches, Hand Rails, Signage, Electrical Lighting and Communications Systems**
.

☐ YES ■ NO **Does this project have air rights, easements, an assumed or deeded property line, no build easements or other circumstances similar to the aforementioned?** If yes, please provide a copy of the official documents.
OFFICIAL DOCUMENTS: **Refer to SHEET # XXXX**

ALTERNATIVE MEANS OF CODE COMPLIANCE:

☐ **Renovation using Chapter 34 (3412-Existing Buildings) in the NCSBC or NFPA 101 as an alternative for Code compliance**
Renovation projects only: If you are using Chapter 34 (3412-Existing Buildings) in the NCSBC or NFPA 101 as an alternative for Code compliance please schedule a preliminary review before submitting your project for review.
Notes for Plans Examiner and Inspectors: Please reporduce the evaluation form on the plans.
DATE OF PRELIMINARY REVIEW: **Review Date** COMPLIANCE LETTER: **Refer to SHEET # XXXX**

☐ **Engineering Judgement** (Approval needed from the Code Administrator is required before submitting)
DATE OF APPROVAL: **Approval Date** COMPLIANCE DOCUMENT: **Refer to SHEET # XXXX**

☐ **Industrial equipment with declaration documents attached** COMPLIANCE DOCUMENT: **Refer to SHEET # XXXX**
☐ **RTAP (Revision to approved plans.)**

A: PROJECT INFORMATION

NAME OF PROJECT: **WAKE BRT NEW BERN AVE**
ADDRESS: **New Bern Ave Corridor** ZIP CODE:
OWNER / AUTHORIZED AGENT: PHONE: **919-996-4123** E-MAIL: **mila.vega@raleighnc.gov**
OWNED BY: ☐ CITY / COUNTY ☐ PRIVATE ☐ STATE
CODE ENFORCEMENT JURISDICTION: ■ CITY **Raleigh** ☐ COUNTY **Wake** ☐ STATE **North Carolina**

B: CONTACT INFORMATION

DESIGNER	FIRM	NAME	LICENSE #	PHONE # with EXT.	E-MAIL
Architectural	Neighboring Concepts	Lucas Volkmar	11955	704-796-7204	luke@neighboringconcepts.com
Landscape Architect	Susan Hatchell LA	Susan Hatchell	528	919-838-9600	susan@susanhatchell.com
Civil	HNTB	John Hornbeck	047963	919-616-5570	ghornbeck@hntb.com
Electrical	Quality Consulting	Donald Jones	028708	803-207-5450	djones@qualityconsultingengineers.com
Communications	Quality Consulting	Donald Jones	028708	803-207-5450	djones@qualityconsultingengineers.com
Plumbing	N/A				
Mechanical	N/A				
Sprinkler-Standpipe	N/A				
Structural	Stewart	Lance Williams	26465	704-909-3520	lwilliams@stewartinc.com
Retaining Walls >5'	.	.	.	.	.
Other	.	.	.	.	.

C: CODE INFORMATION

2018 NC BUILDING CODE:

■ **New Building**
☐ **Addition**
☐ **Renovation**
☐ **1st Time Interior Completion**
☐ **Shell/Core -** Contact the local inspection jurisdiction for possible additional procedures and requirements
☐ **Phased Construction -** Contact the local inspection jurisdiction for possible additional procedures and requirements

2018 NC EXISTING BUILDING CODE:

Existing: ☐ Prescriptive ☐ Repair ☐ Renovation
Alteration: ☐ Level I ☐ Level II ☐ Level III
☐ Historic Property ☐ Change of Use

CONSTRUCTED: (date) **CURRENT OCCUPANCY(S)** (Ch. 3): .
RENOVATED: (date) **PROPOSED OCCUPANCY(S)** (Ch. 3): .

RISK CATEGORY (Table 1604.5):
Current: ☐ I ☐ II ☐ III ☐ IV
Proposed: ☐ I ☐ II ☐ III ☐ IV

D: BASIC BUILDING DATA

Construction Type: (Table 601) (Check all that apply) ☐ I-A ☐ II-A ☐ III-A ☐ IV ☐ V-A ☐ I-B ☐ II-B ☐ III-B ■ V-B
Sprinklers: (Chapter 9) ■ No ☐ Partial ☐ Yes ☐ NFPA 13 ☐ NFPA 13R ☐ NFPA 13D
Standpipes: (Section 905) ■ No ☐ Yes Class: ☐ I ☐ II ☐ III ☐ Wet ☐ Dry
Fire District: ■ No ☐ Yes **Flood Hazard Area**: (Appendix G) ■ No ☐ Yes
Special Inspections Required: ☐ No ■ Yes (Contact the local inspection jurisdiction for additional procedures and requirements)

E: GROSS BUILDING AREA TABLE

FLOOR	EXISTING (SF)	NEW (SF)	SUB-TOTAL
1st Floor	.	750	.
	.	.	.
TOTAL	.	750	.

F: ALLOWABLE AREA

Primary Occupancy Classification(s): (Chapter 3) - Select One
Assembly (303) ☐ A-1 ☐ A-2 ■ A-3 ☐ A-4 ☐ A-5
Business (304) ☐ B
Educational (305) ☐ E
Factory (306) ☐ F-1 Moderate ☐ F-2 Low
Hazardous (307) ☐ H-1 Detonate ☐ H-2 Deflagrate ☐ H-3 Combust ☐ H-4 Health ☐ H-5 HPM
Institutional (308) ☐ I-1 Condition ☐ 1 ☐ 2
☐ I-2 Condition ☐ 1 ☐ 2
☐ I-3 Condition ☐ 1 ☐ 2 ☐ 3 ☐ 4 ☐ 5
☐ I-4
Mercantile (309) ☐ M
Residential (310) ☐ R-1 ☐ R-2 ☐ R-3 ☐ R-4
Storage (311) ☐ S-1 Moderate ☐ S-2 Low
☐ High-piled
☐ Parking Garage
☐ Open
☐ Enclosed
☐ Repair Garage
Utility and Miscellaneous (312) ☐ U

Accessory Occupancies: (if applicable - 508) .
.
Incidental Uses: (if applicable - Table 509) .
.
Special Uses: (if applicable, Chapter 4 - List Code Sections) .
.
Special Provisions: (if applicable, Chapter 5 - List Code Sections) .
.

Misxed Occupancy: If Applicable
■ No ☐ Yes Seperation: (HR.) . Exception: .
☐ **Incidental Use Separation: (508.2.5)** This seperation is not exempt as a Non-Separated Use (see exceptions).
☐ **Non-Separated Use: (508.3)**
The required type of construction for the building shall be determined by applying the height and area limitations for each of the applicable occupancies to the entire building. The most restrictive type of construction, so determined, shall apply to the entire building.
☐ **Separated Use: (508.4)**
See below for area calculations for each story, the area of the occupancy shall be such that the sum of the ratios of the actual floor area of each use divided by the allowable floor area for each use shall not exceed 1.

NOT APPLICABLE

$$\frac{\text{Actual Area of Occupancy A}}{\text{Allowable Area of Occupancy A}} + \frac{\text{Actual Area of Occupancy B}}{\text{Allowable Area of Occupancy B}} + \frac{...}{...} \leq 1.00$$

$$\frac{\text{Actual Area of Occupancy A}}{\text{Allowable Area of Occupancy A}} + \frac{\text{Actual Area of Occupancy B}}{\text{Allowable Area of Occupancy B}} + \frac{...}{...} \leq 1.00$$

STORY NO.	DESCRIPTION AND USE	(A) BLDG AREA PER STORY (ACTUAL)	(B) TABLE 506.2[4] AREA	(C) AREA FOR FRONTAGE INCREASE[1,5]	(D) ALLOWABLE AREA PER STORY OR UNLIMITED[2,3]
1st Floor	.	.	.	.	.
Basement	.	.	.	.	.

[1] Frontage area increses from Section 506.2 are computed thus:
a. Perimeter which fronts a public way or open space having 20 feet minimum width = ______ (F)
b. Total Building Perimeter
c. Ratio (F/P) = __________ (F/P)
d. W = Minimum width of public way = __________ (W)
e. Percent of frontage increase I_f = 100 [F/P - 0.25] x W/30 = ________ (%)

[2] Unlimited area applicable under conditions of Section 507
[3] Maximum Building Area = total number of stories in the building x D (506.2)
[4] The maximum area of open parking garages must comply with Table 406.5.4. The maximum area of air traffic control towers must comply with Table 412.3.1.
[5] Frontage increase is based on the unsprinklered area value in table 506.2

G: ALLOWABLE HEIGHT (CHAPTER 5)

	ALLOWABLE	SHOWN ON PLANS	CODE REFERENCE
Building Height in Feet	40'	16'	.
Building Height in Stories	1	1	.

[1] Provide code reference if the "Shown on Plans" quantity is not based on Table 504.3 or 504.4.

H: FIRE PROTECTION REQUIREMENTS (CHAPTER 7)

BUILDING ELEMENT			FIRE SEPARATION DISTANCE (FEET)	RATING** REQUIRED	RATING** PROVIDED (W/ ______* REDUCTION)	DETAIL # AND SHEET #	DESIGN # FOR RATED ASSEMBLY	SHEET # FOR RATED PENETRATION	SHEET # FOR RATED JOINTS
Structural Frame, including columns, girders, trusses			.	0	0	.	.	.	.
Bearing Walls	Exterior	North	.	0	.	.	.	.	.
		East	.	n/a	.	.	.	.	.
		West	.	n/a	.	.	.	.	.
		South	.	n/a	.	.	.	.	.
	Interior		.	n/a	.	.	.	.	.
Non-Bearing Walls & Partitions	Exterior	North	< 5 ft	n/a	.	.	.	.	.
			≥ 5-ft to < 10-ft	n/a	.	.	.	.	.
			≥ 10-ft to < 30-ft	n/a	.	.	.	.	.
		East	< 5 ft	n/a	.	.	.	.	.
			≥ 5-ft to < 10-ft	n/a	.	.	.	.	.
			≥ 10-ft to < 30-ft	n/a	.	.	.	.	.
		West	< 5 ft	n/a	.	.	.	.	.
			≥ 5-ft to < 10-ft	n/a	.	.	.	.	.
			≥ 10-ft to < 30-ft	n/a	.	.	.	.	.
		South	< 5 ft	n/a	.	.	.	.	.
			≥ 5-ft to < 10-ft	n/a	.	.	.	.	.
			≥ 10-ft to < 30-ft	n/a	.	.	.	.	.
	Interior walls & partitions		.	n/a	.	.	.	.	.
Floor Construction including supporting beams and joists			.	n/a	.	.	.	.	.
Floor Ceiling Assembly			.	n/a	.	.	.	.	.
Columns Supporting Floors			.	n/a	.	.	.	.	.
Roof Construction including supporting beams and joists			.	n/a	.	.	.	.	.
Roof Ceiling Assembly			.	n/a	.	.	.	.	.
Columns Supporting Roof			.	n/a	.	.	.	.	.
Shaft Enclosures - Exit			.	n/a	.	.	.	.	.
Shaft Enclosures - Other			.	n/a	.	.	.	.	.
Corridor Separation			.	n/a	.	.	.	.	.
Occupancy Separation			.	n/a	.	.	.	.	.
Party / Fire Wall Separation			.	n/a	.	.	.	.	.
Smoke Barrier Separation			.	n/a	.	.	.	.	.
Tenant Separation			.	n/a	.	.	.	.	.
Incidental Use Separation	Furnace Rm > 400,000 btu's		.	n/a	.	.	.	.	.
	Boiler Rooms with > 15psi and 10 hp		.	n/a	.	.	.	.	.
	Refrig. Machine Rm		.	n/a	.	.	.	.	.
	Storage > 100 sf		.	n/a	.	.	.	.	.

* Indicate section number permitting reduction.

I. PERCENTAGE OF WALL OPENING CALCULATIONS

NOT APPLICABLE

FIRE SEPARATION DISTANCE (FEET) FROM PROPERTY LINES			ACTUAL SHOWN ON PLANS (%)
.	.	.	.
.	.	.	.
.	.	.	.

J. LIFE SAFETY SYSTEM REQUIREMENTS

Emergency Lighting: ■ NO ☐ YES
Exit Signs: ■ NO ☐ YES
Fire Alarm: ■ NO ☐ YES
Smoke Detection Systems: ■ NO ☐ YES ☐ PARTIAL .
Carbon Monoxide Detection: ■ NO ☐ YES

K. LIFE SAFETY PLAN REQUIREMENTS

Life Safety Plan Sheet #: .

☐ N/A Fire and/or smoke rated wall locations (Chapter 7)
☐ N/A Exterior wall opening area with respect to distance to assumed property lines (705.8)
☐ N/A Occupancy Use for each area as it relates to occupant load calculation (Table 1004.1.2)
☐ N/A Exit access travel distances (1017)
☐ N/A Common path of travel distances (1006.2.1 & 1006.3.2(1))
☐ N/A Maximum calculated occupant load capacity each exit door can accommodated based on egress width (1005.3)
☐ N/A A separate schematic plan indicating where fire rated floor/ceiling and/or roof structure is provided for purposes of occupancy separation
☐ N/A Location of doors with panic hardware (1010.1.10)
☐ N/A Location of doors with delayed egress locks and the amount of delay (1010.1.9.7)
☐ N/A Location of doors with electromagnetic egress locks (1010.1.9.9)
☐ N/A The square footage of each smoke compartment for Occupancy Classification I-2 (407.4)
☐ N/A Note any code exceptions or table notes that may have been utilized regarding the items above
☐ N/A Assumed and real property line locations
☐ N/A Occupant loads for each area
☐ N/A Dead end lengths (1020.4)
☐ N/A Clear exit widths for each exit door
☐ N/A Actual occupant load for each exit door
☐ N/A Location of doors equipped with hold-open devices
☐ N/A Location of emergency escape windows (1030)
☐ N/A The square footage of each fire area (202)

L. ACCESSIBLE DWELLING UNITS AND SLEEPING UNITS

ACCESSIBLE DWELLING UNITS (1107)

NOT APPLICABLE

TOTAL UNITS	ACCESSIBLE UNITS REQUIRED	PROVIDED	REQUIRED	PROVIDED	TYPE B UNITS REQUIRED	TYPE B UNITS PROVIDED	TOTAL ACCESSIBLE UNITS PROVIDED
.	.	.	.	.	.	.	.

M. ACCESSIBLE PARKING

ACCESSIBLE PARKING (1106)

NOT APPLICABLE

LOT OR PARKING AREA	TOTAL # OF PARKING SPACES REQUIRED	PROVIDED	# OF ACCESSIBLE SPACES PROVIDED: 5' ACCESS AISLE	132" ACCESS AISLE	SPACES WITH 8' ACCESS AISLE	TOTAL # ACCESSIBLE PROVIDED
.	.	.	.	.	.	.
.	.	.	.	.	.	.
TOTAL	.	.	.	.	.	.

N. PLUMBING FIXTURE REQUIREMENTS

(TABLE 2902.1) **Total Required / Total Provided**

NOT APPLICABLE

OCCUPANCY USE GROUP AND/OR SPACE DESIGNATION	WATERCLOSETS MALE	FEMALE				SHOWER S/ TUBS	DRINKING FOUNTAINS REGULAR	ACCESSIBLE
1st Floor	.	.	.	.	.	.	.	.
Basement	.	.	.	.	.	.	.	.
TOTAL	.	.	.	.	.	.	.	.

O. SPECIAL APPROVALS

SPECIAL APPROVAL: (Local Jurisdiction, Department of Insurance, OSC, DPI, DHHS, ICC, etc. , describe below)
.
.
.

SCHEDULE OF SPECIAL INSPECTIONS ☐ **No special inspections required for this project** ☐ **Special inspections required**

The following sheets comprise the required schedule of Special Inspections for this project:
The construction divisions which require special inspections for this project are as follows:

☐ **IT-1 Verification of Soils**
☐ **IT-2 Excavation and Fill**
☐ **IT-3 Piling and Drilling Piers**
☐ **IT-4 Modular Retaining Walls**
☐ **IT-5 Reinforced Concrete**
☐ **IT-6 Post Tension Slab**
☐ **IT-7 Pre-cast Concrete Erection**
☐ **IT-8 Pre-stressed Concrete**
☐ **IT-9 Inspection of Pre-Cast Fabricators**
☐ **IT-10 Inspection of Structural Steel Fabricators**
☐ **IT-11 Structural Masonry**
☐ **IT-12 Welding**
☐ **IT-13 High Strength Bolts & Steel Framing Insp.**
☐ **IT-14 Sprayed Fire-Resistance Materials**
☐ **IT-15 Exterior Insulation and Finish system**
☐ **IT-16 Seismic Resistance**
☐ **IT-17 Smoke Control**
☐ **IT-18 Detention Basin**
☐ **IT-19 Special Cases**

CHAPTER 17 Specific Special Inspetions: .

P. ENERGY SUMMARY

NOT APPLICABLE

BUILDING ENVELOPE:
ENERGY REQUIREMENTS:
The following data shall be considered minimum and any special attribute required to meet the energy code shall also be provided. Each Designer shall furnish the required portions of the project information for the plan data sheet. If energy cost budget method, state the annual energy cost budget vs. al
EXISTING BUILDING ENVELOPE COMP
CLIMATE ZONE: (North Carolina Energy Conservation Code NCECC 301.1) ☐ **3A** ☐ **4A** ☐ **5A**
METHOD OF COMPLIANCE: ☐ **Prescriptive** (ASHRAE 90.1) ☐ **Prescriptive** ☐ **No change to Building Envelope**
☐ **Performance** (ASHRAE 90.1) ☐ **Performance**
THERMAL ENVELOPE: (NCECC Chapter 4 and or 5)

Q. STRUCTURAL DESIGN

LOCATED ON STRUCTURAL SHEET: ☐ **NO** ☐ **YES** REFER TO SHEET NUMBER: .

R. MECHANICAL SUMMARY (NCECC 503)

LOCATED ON MECHANICAL SHEET: ☐ **NO** ☐ **YES** REFER TO SHEET NUMBER: .

S. ELECTRICAL SUMMARY (NCECC 505)

LOCATED ON ELECTRICAL SHEET: ☐ **NO** ☐ **YES** REFER TO SHEET NUMBER: .

neighboring concepts
NEIGHBORING CONCEPTS, PLLC
1635 West Trade Street, Suite 1A
Charlotte, North Carolina 28216
NC Cert. No: 51098

INCOMPLETE PLANS
DO NOT USE FOR R/W ACQUISITION

CITY OF RALEIGH
ENGINEERING SERVICES DEPARTMENT

DOCUMENT NOT CONSIDERED FINAL UNLESS ALL SIGNATURES COMPLETED

CODE SUMMARY - STATION TYPE A - URBAN CORE

PROJECT: WAKE BRT NEW BERN AVE

DATE: 1/28/2022
SHEET BY: AMK
CHECKED BY: LAV

REVISIONS

NO.	DATE

SCALES

SA-001

1/24/2022 3:26:06 PM
BIM 360://20-007_Wake BRT/20-007 Wake BRT_R20_Arch_Central.rvt

neighboring concepts

NEIGHBORING CONCEPTS, PLLC
1635 West Trade Street, Suite 1A
Charlotte, North Carolina 28216
NC Cert. No: 51098

INCOMPLETE PLANS
DO NOT USE FOR R/W ACQUISITION

2018 APPENDIX B

BUILDING CODE SUMMARY FOR ALL COMMERCIAL PROJECTS

(EXCEPT 1 AND 2-FAMILY DWELLINGS AND TOWNHOUSES)

PROJECT SUMMARY / ALTERNATIVE MEANS OF COMPLIANCE

BUILDING DESCRIPTION: **Bus Rapid Transit Passenger Station Type B - Sub-Urban Station**
Station is positioned along a sidewalk in an setting just outside of an urban core, and includes access from each end of the platform.
.

SCOPE OF WORK DETAILS: (If phased construction, please see plan submittal guidelines.) **Foundations, Structural Slabs, Canopies, Benches, Hand Rails, Signage, Electrical Lighting and Communications Systems**
.

☐ YES ■ NO **Does this project have air rights, easements, an assumed or deeded property line, no build easements or other circumstances similar to the aforementioned?** If yes, please provide a copy of the official documents.
OFFICIAL DOCUMENTS: **Refer to SHEET # XXXX**

ALTERNATIVE MEANS OF CODE COMPLIANCE:

☐ **Renovation using Chapter 34 (3412-Existing Buildings) in the NCSBC or NFPA 101 as an alternative for Code compliance**
Renovation projects only: If you are using Chapter 34 (3412-Existing Buildings) in the NCSBC or NFPA 101 as an alternative for Code compliance please schedule a preliminary review before submitting your project for review.
Notes for Plans Examiner and Inspectors: Please reporduce the evaluation form on the plans.
DATE OF PRELIMINARY REVIEW: **Review Date** COMPLIANCE LETTER: **Refer to SHEET # XXXX**

☐ **Engineering Judgement** (Approval needed from the Code Administrator is required before submitting)
DATE OF APPROVAL: **Approval Date** COMPLIANCE DOCUMENT: **Refer to SHEET # XXXX**

☐ **Industrial equipment with declaration documents attached** COMPLIANCE DOCUMENT: **Refer to SHEET # XXXX**
☐ **RTAP (Revision to approved plans.)**

A: PROJECT INFORMATION

NAME OF PROJECT: **WAKE BRT NEW BERN AVE**
ADDRESS: **New Bern Ave Corridor** ZIP CODE:
OWNER / AUTHORIZED AGENT: PHONE: **919-996-4123** E-MAIL: **mila.vega@raleighnc.gov**
OWNED BY: ☐ CITY / COUNTY ☐ PRIVATE ☐ STATE
CODE ENFORCEMENT JURISDICTION: ■ CITY **Raleigh** ☐ COUNTY **Wake** ☐ STATE **North Carolina**

B: CONTACT INFORMATION

DESIGNER	FIRM	NAME	LICENSE #	PHONE # with EXT.	E-MAIL
Architectural	Neighboring Concepts	Lucas Volkmar	11955	704-796-7204	luke@neighboringconcepts.com
Landscape Architect	Susan Hatchell LA	Susan Hatchell	528	919-838-9600	susan@susanhatchell.com
Civil	HNTB	John Hornbeck	047963	919-616-5570	ghornbeck@hntb.com
Electrical	Quality Consulting	Donald Jones	028708	803-207-5450	djones@qualityconsultingengineers.com
Communications	Quality Consulting	Donald Jones	028708	803-207-5450	djones@qualityconsultingengineers.com
Plumbing	N/A				
Mechanical	N/A				
Sprinkler-Standpipe	N/A				
Structural	Stewart	Lance Williams	26465	704-909-3520	lwilliams@stewartinc.com
Retaining Walls >5'	.	.	.	.	.
Other	.	.	.	.	.

C: CODE INFORMATION

2018 NC BUILDING CODE:
■ **New Building**
☐ **Addition**
☐ **Renovation**
☐ **1st Time Interior Completion**
☐ **Shell/Core -** Contact the local inspection jurisdiction for possible additional procedures and requirements
☐ **Phased Construction -** Contact the local inspection jurisdiction for possible additional procedures and requirements

2018 NC EXISTING BUILDING CODE:
Existing: ☐ Prescriptive ☐ Repair ☐ Renovation
Alteration: ☐ Level I ☐ Level II ☐ Level III
☐ Historic Property ☐ Change of Use

CONSTRUCTED: (date) **CURRENT OCCUPANCY(S)** (Ch. 3): .
RENOVATED: (date) **PROPOSED OCCUPANCY(S)** (Ch. 3): .

RISK CATEGORY (Table 1604.5):
Current: ☐ I ☐ II ☐ III ☐ IV
Proposed: ☐ I ☐ II ☐ III ☐ IV

D: BASIC BUILDING DATA

Construction Type: (Table 601) (Check all that apply) ☐ I-A ☐ II-A ☐ III-A ☐ IV ☐ V-A ☐ I-B ☐ II-B ☐ III-B ■ V-B
Sprinklers: (Chapter 9) ■ No ☐ Partial ☐ Yes ☐ NFPA 13 ☐ NFPA 13R ☐ NFPA 13D
Standpipes: (Section 905) ■ No ☐ Yes Class: ☐ I ☐ II ☐ III ☐ Wet ☐ Dry
Fire District: ■ No ☐ Yes **Flood Hazard Area**: (Appendix G) ■ No ☐ Yes
Special Inspections Required: ☐ No ■ Yes (Contact the local inspection jurisdiction for additional procedures and requirements)

E: GROSS BUILDING AREA TABLE

FLOOR	EXISTING (SF)	NEW (SF)	SUB-TOTAL
1st Floor	.	750	.
	.	.	.
TOTAL	.	750	.

F: ALLOWABLE AREA

Primary Occupancy Classification(s): (Chapter 3) - Select One
Assembly (303) ☐ A-1 ☐ A-2 ■ A-3 ☐ A-4 ☐ A-5
Business (304) ☐ B
Educational (305) ☐ E
Factory (306) ☐ F-1 Moderate ☐ F-2 Low
Hazardous (307) ☐ H-1 Detonate ☐ H-2 Deflagrate ☐ H-3 Combust ☐ H-4 Health ☐ H-5 HPM
Institutional (308) ☐ I-1 Condition ☐ 1 ☐ 2
☐ I-2 Condition ☐ 1 ☐ 2
☐ I-3 Condition ☐ 1 ☐ 2 ☐ 3 ☐ 4 ☐ 5
☐ I-4
Mercantile (309) ☐ M
Residential (310) ☐ R-1 ☐ R-2 ☐ R-3 ☐ R-4
Storage (311) ☐ S-1 Moderate ☐ S-2 Low
☐ High-piled
☐ Parking Garage
☐ Open
☐ Enclosed
☐ Repair Garage
Utility and Miscellaneous (312) ☐ U

Accessory Occupancies: (if applicable - 508) .
.
Incidental Uses: (if applicable - Table 509) .
.
Special Uses: (if applicable, Chapter 4 - List Code Sections) .
.
Special Provisions: (if applicable, Chapter 5 - List Code Sections) .
.

Misxed Occupancy: If Applicable
■ No ☐ Yes Seperation: (HR.) . Exception: .
☐ **Incidental Use Separation: (508.2.5)** This seperation is not exempt as a Non-Separated Use (see exceptions).
☐ **Non-Separated Use: (508.3)**
The required type of construction for the building shall be determined by applying the height and area limitations for each of the applicable occupancies to the entire building. The most restrictive type of construction, so determined, shall apply to the entire building.
☐ **Separated Use: (508.4)**
See below for area calculations for each story, the area of the occupancy shall be such that the sum of the ratios of the actual floor area of each use divided by the allowable floor area for each use shall not exceed 1.

NOT APPLICABLE

Actual Area of Occupancy A / Allowable Area of Occupancy A + *Actual Area of Occupancy B / Allowable Area of Occupancy B* + ... ≤ 1.00

Actual Area of Occupancy A* / *Allowable Area of Occupancy A + ***Actual Area of Occupancy B* / *Allowable Area of Occupancy B*** + ... ≤ **1.00**

STORY NO.	DESCRIPTION AND USE	(A) BLDG AREA PER STORY (ACTUAL)	(B) TABLE 506.2[4] AREA	(C) AREA FOR FRONTAGE INCREASE[1,5]	(D) ALLOWABLE AREA PER STORY OR UNLIMITED[2,3]
1st Floor	.	.	.	.	.
Basement	.	.	.	.	.

1 Frontage area increses from Section 506.2 are computed thus:
a. Perimeter which fronts a public way or open space having 20 feet minimum width = ______ (F)
b. Total Building Perimeter
c. Ratio (F/P) = __________ (F/P)
d. W = Minimum width of public way = __________ (W)
e. Percent of frontage increase I_f = 100 [F/P - 0.25] x W/30 = ________ (%)

2 Unlimited area applicable under conditions of Section 507
3 Maximum Building Area = total number of stories in the building x D (506.2)
4 The maximum area of open parking garages must comply with Table 406.5.4. The maximum area of air traffic control towers must comply with Table 412.3.1.
5 Frontage increase is based on the unsprinklered area value in table 506.2

G: ALLOWABLE HEIGHT (CHAPTER 5)

	ALLOWABLE	SHOWN ON PLANS	CODE REFERENCE
Building Height in Feet	40'	16'	.
Building Height in Stories	1	1	.

1 Provide code reference if the "Shown on Plans" quantity is not based on Table 504.3 or 504.4.

H: FIRE PROTECTION REQUIREMENTS (CHAPTER 7)

BUILDING ELEMENT			FIRE SEPARATION DISTANCE (FEET)	RATING** REQUIRED	RATING** PROVIDED (W/ ______* REDUCTION)	DETAIL # AND SHEET #	DESIGN # FOR RATED ASSEMBLY	SHEET # FOR RATED PENETRATION	SHEET # FOR RATED JOINTS
Structural Frame, including columns, girders, trusses			.	0	0	.	.	.	.
Bearing Walls	Exterior	North	.	0	.	.	.	.	.
		East	.	n/a	.	.	.	.	.
		West	.	n/a	.	.	.	.	.
		South	.	n/a	.	.	.	.	.
	Interior		.	n/a	.	.	.	.	.
Non-Bearing Walls & Partitions	Exterior	North	< 5 ft	n/a	.	.	.	.	.
			≥ 5-ft to < 10-ft	n/a	.	.	.	.	.
			≥ 10-ft to < 30-ft	n/a	.	.	.	.	.
		East	< 5 ft	n/a	.	.	.	.	.
			≥ 5-ft to < 10-ft	n/a	.	.	.	.	.
			≥ 10-ft to < 30-ft	n/a	.	.	.	.	.
		West	< 5 ft	n/a	.	.	.	.	.
			≥ 5-ft to < 10-ft	n/a	.	.	.	.	.
			≥ 10-ft to < 30-ft	n/a	.	.	.	.	.
		South	< 5 ft	n/a	.	.	.	.	.
			≥ 5-ft to < 10-ft	n/a	.	.	.	.	.
			≥ 10-ft to < 30-ft	n/a	.	.	.	.	.
	Interior walls & partitions		.	n/a	.	.	.	.	.
Floor Construction including supporting beams and joists			.	n/a	.	.	.	.	.
Floor Ceiling Assembly			.	n/a	.	.	.	.	.
Columns Supporting Floors			.	n/a	.	.	.	.	.
Roof Construction including supporting beams and joists			.	n/a	.	.	.	.	.
Roof Ceiling Assembly			.	n/a	.	.	.	.	.
Columns Supporting Roof			.	n/a	.	.	.	.	.
Shaft Enclosures - Exit			.	n/a	.	.	.	.	.
Shaft Enclosures - Other			.	n/a	.	.	.	.	.
Corridor Separation			.	n/a	.	.	.	.	.
Occupancy Separation			.	n/a	.	.	.	.	.
Party / Fire Wall Separation			.	n/a	.	.	.	.	.
Smoke Barrier Separation			.	n/a	.	.	.	.	.
Tenant Separation			.	n/a	.	.	.	.	.
Incidental Use Separation	Furnace Rm > 400,000 btu's		.	n/a	.	.	.	.	.
	Boiler Rooms with > 15psi and 10 hp		.	n/a	.	.	.	.	.
	Refrig. Machine Rm		.	n/a	.	.	.	.	.
	Storage > 100 sf		.	n/a	.	.	.	.	.

* Indicate section number permitting reduction.

I. PERCENTAGE OF WALL OPENING CALCULATIONS

NOT APPLICABLE

FIRE SEPARATION DISTANCE (FEET) FROM PROPERTY LINES			ACTUAL SHOWN ON PLANS (%)
.	.	.	.
.	.	.	.
.	.	.	.

J. LIFE SAFETY SYSTEM REQUIREMENTS

Emergency Lighting: ■ NO ☐ YES
Exit Signs: ■ NO ☐ YES
Fire Alarm: ■ NO ☐ YES
Smoke Detection Systems: ■ NO ☐ YES ☐ PARTIAL .
Carbon Monoxide Detection: ■ NO ☐ YES

K. LIFE SAFETY PLAN REQUIREMENTS

Life Safety Plan Sheet #: .

☐ N/A Fire and/or smoke rated wall locations (Chapter 7)
☐ N/A Exterior wall opening area with respect to distance to assumed property lines (705.8)
☐ N/A Occupancy Use for each area as it relates to occupant load calculation (Table 1004.1.2)
☐ N/A Exit access travel distances (1017)
☐ N/A Common path of travel distances (1006.2.1 & 1006.3.2(1))
☐ N/A Maximum calculated occupant load capacity each exit door can accommodated based on egress width (1005.3)
☐ N/A A separate schematic plan indicating where fire rated floor/ceiling and/or roof structure is provided for purposes of occupancy separation
☐ N/A Location of doors with panic hardware (1010.1.10)
☐ N/A Location of doors with delayed egress locks and the amount of delay (1010.1.9.7)
☐ N/A Location of doors with electromagnetic egress locks (1010.1.9.9)
☐ N/A The square footage of each smoke compartment for Occupancy Classification I-2 (407.4)
☐ N/A Note any code exceptions or table notes that may have been utilized regarding the items above
☐ N/A Assumed and real property line locations
☐ N/A Occupant loads for each area
☐ N/A Dead end lengths (1020.4)
☐ N/A Clear exit widths for each exit door
☐ N/A Actual occupant load for each exit door
☐ N/A Location of doors equipped with hold-open devices
☐ N/A Location of emergency escape windows (1030)
☐ N/A The square footage of each fire area (202)

L. ACCESSIBLE DWELLING UNITS AND SLEEPING UNITS

ACCESSIBLE DWELLING UNITS (1107)

NOT APPLICABLE

TOTAL UNITS	ACCESSIBLE UNITS REQUIRED	PROVIDED	REQUIRED	PROVIDED	…E B …ITS REQUIRED	TYPE B UNITS PROVIDED	TOTAL ACCESSIBLE UNITS PROVIDED
.	.	.	.	.	.	.	.

M. ACCESSIBLE PARKING

ACCESSIBLE PARKING (1106)

NOT APPLICABLE

LOT OR PARKING AREA	TOTAL # OF PARKING S… REQUIRED	PROVIDED	# OF ACCESSIBLE SPACES PROVIDED …CES WITH …' ACCESS AISLE	…' ACCESS AISLE	8' ACCESS AISLE	TOTAL # ACCESSIBLE PROVIDED
.	.	.	.	.	.	.
.	.	.	.	.	.	.
TOTAL	.	.	.	.	.	.

N. PLUMBING FIXTURE REQUIREMENTS

(TABLE 2902.1) **Total Required / Total Provided**

NOT APPLICABLE

OCCUPANCY USE GROUP AND/OR SPACE DESIGNATION	WATERCLOS… MALE	F…				…SHOWER S/ TUBS	DRINKING FOUNTAINS REGULAR	DRINKING FOUNTAINS ACCESSIBLE
1st Floor	.	.	.	.	.	.	.	.
Basement	.	.	.	.	.	.	.	.
TOTAL	.	.	.	.	.	.	.	.

O. SPECIAL APPROVALS

SPECIAL APPROVAL: (Local Jurisdiction, Department of Insurance, OSC, DPI, DHHS, ICC, etc. , describe below)
.
.
.

SCHEDULE OF SPECIAL INSPECTIONS ☐ **No special inspections required for this project** ☐ **Special inspections required**

The following sheets comprise the required schedule of Special Inspections for this project:
The construction divisions which require special inspections for this project are as follows:

☐ **IT-1 Verification of Soils**
☐ **IT-2 Excavation and Fill**
☐ **IT-3 Piling and Drilling Piers**
☐ **IT-4 Modular Retaining Walls**
☐ **IT-5 Reinforced Concrete**
☐ **IT-6 Post Tension Slab**
☐ **IT-7 Pre-cast Concrete Erection**
☐ **IT-8 Pre-stressed Concrete**
☐ **IT-9 Inspection of Pre-Cast Fabricators**
☐ **IT-10 Inspection of Structural Steel Fabricators**
☐ **IT-11 Structural Masonry**
☐ **IT-12 Welding**
☐ **IT-13 High Strength Bolts & Steel Framing Insp.**
☐ **IT-14 Sprayed Fire-Resistance Materials**
☐ **IT-15 Exterior Insulation and Finish system**
☐ **IT-16 Seismic Resistance**
☐ **IT-17 Smoke Control**
☐ **IT-18 Detention Basin**
☐ **IT-19 Special Cases**

CHAPTER 17 Specific Special Inspetions: .

P. ENERGY SUMMARY

NOT APPLICABLE

BUILDING ENVELOPE:
ENERGY REQUIREMENTS:
The following data shall be considered minimum and any special attribute required to meet the energy code shall also be provided. Each Designer shall furnish the required portions of the project information for the plan data sheet. If energy cost budget method, state the annual energy cost budget vs. al…
EXISTING BUILDING ENVELOPE COMP…
CLIMATE ZONE: (North Carolina Energy Conservation Code NCECC 301.1) ☐ **3A** ☐ **4A** ☐ **5A**
METHOD OF COMPLIANCE: ☐ **Prescriptive** (ASHRAE 90.1) ☐ **Prescriptive** ☐ **No change to Building Envelope**
☐ **Performance** (ASHRAE 90.1) ☐ **Performance**

THERMAL ENVELOPE: (NCECC Chapter 4 and or 5)

Q. STRUCTURAL DESIGN

LOCATED ON STRUCTURAL SHEET: ☐ **NO** ☐ **YES** REFER TO SHEET NUMBER: .

R. MECHANICAL SUMMARY (NCECC 503)

LOCATED ON MECHANICAL SHEET: ☐ **NO** ☐ **YES** REFER TO SHEET NUMBER: .

S. ELECTRICAL SUMMARY (NCECC 505)

LOCATED ON ELECTRICAL SHEET: ☐ **NO** ☐ **YES** REFER TO SHEET NUMBER: .

CITY OF RALEIGH
ENGINEERING SERVICES DEPARTMENT

DOCUMENT NOT CONSIDERED FINAL UNLESS ALL SIGNATURES COMPLETED

CODE SUMMARY - STATION TYPE B - SUB-URBAN

PROJECT: WAKE BRT NEW BERN AVE

DATE:	1/28/2022
SHEET BY:	AMK
CHECKED BY:	LAV

REVISIONS

NO.	DATE

SCALES

SA-002

1/24/2022 3:26:08 PM
BIM 360://20-007 Wake BRT/20-007_Wake BRT_R20_Arch_Central.rvt

2018 APPENDIX B

BUILDING CODE SUMMARY FOR ALL COMMERCIAL PROJECTS

(EXCEPT 1 AND 2-FAMILY DWELLINGS AND TOWNHOUSES)

PROJECT SUMMARY / ALTERNATIVE MEANS OF COMPLIANCE

BUILDING DESCRIPTION: **Bus Rapid Transit Passenger Station Type C - Intermodal**
Station is positioned along a transitway and multi-use path, and includes access from each end of the platform.
.

SCOPE OF WORK DETAILS: (If phased construction, please see plan submittal guidelines.) **Foundations, Structural Slabs, Canopies, Benches, Hand Rails, Signage, Electrical Lighting and Communications Systems**
.

☐ YES ■ NO **Does this project have air rights, easements, an assumed or deeded property line, no build easements or other circumstances similar to the aforementioned?** If yes, please provide a copy of the official documents.
OFFICIAL DOCUMENTS: **Refer to SHEET # XXXX**

ALTERNATIVE MEANS OF CODE COMPLIANCE:
☐ **Renovation using Chapter 34 (3412-Existing Buildings) in the NCSBC or NFPA 101 as an alternative for Code compliance**
Renovation projects only: If you are using Chapter 34 (3412-Existing Buildings) in the NCSBC or NFPA 101 as an alternative for Code compliance please schedule a preliminary review before submitting your project for review.
Notes for Plans Examiner and Inspectors: Please reporduce the evaluation form on the plans.
DATE OF PRELIMINARY REVIEW: **Review Date** COMPLIANCE LETTER: **Refer to SHEET # XXXX**

☐ **Engineering Judgement** (Approval needed from the Code Administrator is required before submitting)
DATE OF APPROVAL: **Approval Date** COMPLIANCE DOCUMENT: **Refer to SHEET # XXXX**

☐ **Industrial equipment with declaration documents attached** COMPLIANCE DOCUMENT: **Refer to SHEET # XXXX**
☐ **RTAP (Revision to approved plans.)**

A: PROJECT INFORMATION

NAME OF PROJECT: **WAKE BRT NEW BERN AVE**
ADDRESS: **New Bern Ave Corridor** ZIP CODE:
OWNER / AUTHORIZED AGENT: PHONE: **919-996-4123** E-MAIL: **mila.vega@raleighnc.gov**
OWNED BY: ☐ CITY / COUNTY ☐ PRIVATE ☐ STATE
CODE ENFORCEMENT JURISDICTION: ■ CITY **Raleigh** ☐ COUNTY **Wake** ☐ STATE **North Carolina**

B: CONTACT INFORMATION

DESIGNER	FIRM	NAME	LICENSE #	PHONE # with EXT.	E-MAIL
Architectural	Neighboring Concepts	Lucas Volkmar	11955	704-796-7204	luke@neighboringconcepts.com
Landscape Architect	Susan Hatchell LA	Susan Hatchell	528	919-838-9600	susan@susanhatchell.com
Civil	HNTB	John Hornbeck	047963	919-616-5570	ghornbeck@hntb.com
Electrical	Quality Consulting	Donald Jones	028708	803-207-5450	djones@qualityconsultingengineers.com
Communications	Quality Consulting	Donald Jones	028708	803-207-5450	djones@qualityconsultingengineers.com
Plumbing	N/A				
Mechanical	N/A				
Sprinkler-Standpipe	N/A				
Structural	Stewart	Lance Williams	26465	704-909-3520	lwilliams@stewartinc.com
Retaining Walls >5'	.	.	.	.	.
Other	.	.	.	.	.

C: CODE INFORMATION

2018 NC BUILDING CODE:
■ **New Building**
☐ **Addition**
☐ **Renovation**
☐ **1st Time Interior Completion**
☐ **Shell/Core -** Contact the local inspection jurisdiction for possible additional procedures and requirements
☐ **Phased Construction -** Contact the local inspection jurisdiction for possible additional procedures and requirements

2018 NC EXISTING BUILDING CODE:
Existing: ☐ Prescriptive ☐ Repair ☐ Renovation
Alteration: ☐ Level I ☐ Level II ☐ Level III
☐ Historic Property ☐ Change of Use

CONSTRUCTED: (date) **CURRENT OCCUPANCY(S)** (Ch. 3): .
RENOVATED: (date) **PROPOSED OCCUPANCY(S)** (Ch. 3): .

RISK CATEGORY (Table 1604.5):
Current: ☐ I ☐ II ☐ III ☐ IV
Proposed: ☐ I ☐ II ☐ III ☐ IV

D: BASIC BUILDING DATA

Construction Type: (Table 601) (Check all that apply) ☐ I-A ☐ II-A ☐ III-A ☐ IV ☐ V-A ☐ I-B ☐ II-B ☐ III-B ■ V-B
Sprinklers: (Chapter 9) ■ No ☐ Partial ☐ Yes ☐ NFPA 13 ☐ NFPA 13R ☐ NFPA 13D
Standpipes: (Section 905) ■ No ☐ Yes Class: ☐ I ☐ II ☐ III ☐ Wet ☐ Dry
Fire District: ■ No ☐ Yes **Flood Hazard Area:** (Appendix G) ■ No ☐ Yes
Special Inspections Required: ☐ No ■ Yes (Contact the local inspection jurisdiction for additional procedures and requirements)

E: GROSS BUILDING AREA TABLE

FLOOR	EXISTING (SF)	NEW (SF)	SUB-TOTAL
1st Floor	.	750	.
	.	.	.
TOTAL	.	750	.

F: ALLOWABLE AREA

Primary Occupancy Classification(s): (Chapter 3) - Select One
Assembly (303) ☐ A-1 ☐ A-2 ■ A-3 ☐ A-4 ☐ A-5
Business (304) ☐ B
Educational (305) ☐ E
Factory (306) ☐ F-1 Moderate ☐ F-2 Low
Hazardous (307) ☐ H-1 Detonate ☐ H-2 Deflagrate ☐ H-3 Combust ☐ H-4 Health ☐ H-5 HPM
Institutional (308) ☐ I-1 Condition ☐ 1 ☐ 2
☐ I-2 Condition ☐ 1 ☐ 2
☐ I-3 Condition ☐ 1 ☐ 2 ☐ 3 ☐ 4 ☐ 5
☐ I-4
Mercantile (309) ☐ M
Residential (310) ☐ R-1 ☐ R-2 ☐ R-3 ☐ R-4
Storage (311) ☐ S-1 Moderate ☐ S-2 Low
☐ High-piled
☐ Parking Garage ☐ Open ☐ Enclosed
☐ Repair Garage
Utility and Miscellaneous (312) ☐ U

Accessory Occupancies: (if applicable - 508) .
.
Incidental Uses: (if applicable - Table 509) .
.
Special Uses: (if applicable, Chapter 4 - List Code Sections) .
.
Special Provisions: (if applicable, Chapter 5 - List Code Sections) .
.

Misxed Occupancy: If Applicable
■ No ☐ Yes Seperation: (HR.) . Exception: .
☐ **Incidental Use Separation: (508.2.5)** This seperation is not exempt as a Non-Separated Use (see exceptions).
☐ **Non-Separated Use: (508.3)**
The required type of construction for the building shall be determined by applying the height and area limitations for each of the applicable occupancies to the entire building. The most restrictive type of construction, so determined, shall apply to the entire building.
☐ **Separated Use: (508.4)**
See below for area calculations for each story, the area of the occupancy shall be such that the sum of the ratios of the actual floor area of each use divided by the allowable floor area for each use shall not exceed 1.

NOT APPLICABLE

Actual Area of Occupancy A / *Allowable Area of Occupancy A* + *Actual Area of Occupancy B* / *Allowable Area of Occupancy B* ... ≤ 1.00

Actual Area of Occupancy A / **Allowable Area of Occupancy A** + **Actual Area of Occupancy B** / **Allowable Area of Occupancy B** + ... ≤ 1.00

STORY NO.	DESCRIPTION AND USE	(A) BLDG AREA PER STORY (ACTUAL)	(B) TABLE 506.2[4] AREA	(C) AREA FOR FRONTAGE INCREASE[1,5]	(D) ALLOWABLE AREA PER STORY OR UNLIMITED[2,3]
1st Floor	.	.	.	.	.
Basement	.	.	.	.	.

1 Frontage area increases from Section 506.2 are computed thus:
a. Perimeter which fronts a public way or open space having 20 feet minimum width = ______ (F)
b. Total Building Perimeter
c. Ratio (F/P) = ______ (F/P)
d. W = Minimum width of public way = ______ (W)
e. Percent of frontage increase, I_f = 100 [F/P - 0.25] x W/30 = ______ (%)
2 Unlimited area applicable under conditions of Section 507
3 Maximum Building Area = total number of stories in the building x D (506.2)
4 The maximum area of open parking garages must comply with Table 406.5.4. The maximum area of air traffic control towers must comply with Table 412.3.1.
5 Frontage increase is based on the unsprinklered area value in table 506.2

G: ALLOWABLE HEIGHT (CHAPTER 5)

	ALLOWABLE	SHOWN ON PLANS	CODE REFERENCE
Building Height in Feet	40'	16'	.
Building Height in Stories	1	1	.

1 Provide code reference if the "Shown on Plans" quantity is not based on Table 504.3 or 504.4.

H: FIRE PROTECTION REQUIREMENTS (CHAPTER 7)

BUILDING ELEMENT			FIRE SEPARATION DISTANCE (FEET)	RATING** REQUIRED	RATING** PROVIDED (W/ ___* REDUCTION)	DETAIL # AND SHEET #	DESIGN # FOR RATED ASSEMBLY	SHEET # FOR RATED PENETRATION	SHEET # FOR RATED JOINTS
Structural Frame, including columns, girders, trusses			.	0	0	.	.	.	.
Bearing Walls	Exterior	North	.	0	.	.	.	.	.
		East	.	n/a	.	.	.	.	.
		West	.	n/a	.	.	.	.	.
		South	.	n/a	.	.	.	.	.
	Interior		.	n/a	.	.	.	.	.
Non-Bearing Walls & Partitions	Exterior	North	< 5 ft	n/a	.	.	.	.	.
			≥ 5-ft to < 10-ft	n/a	.	.	.	.	.
			≥ 10-ft to < 30-ft	n/a	.	.	.	.	.
		East	< 5 ft	n/a	.	.	.	.	.
			≥ 5-ft to < 10-ft	n/a	.	.	.	.	.
			≥ 10-ft to < 30-ft	n/a	.	.	.	.	.
		West	< 5 ft	n/a	.	.	.	.	.
			≥ 5-ft to < 10-ft	n/a	.	.	.	.	.
			≥ 10-ft to < 30-ft	n/a	.	.	.	.	.
		South	< 5 ft	n/a	.	.	.	.	.
			≥ 5-ft to < 10-ft	n/a	.	.	.	.	.
			≥ 10-ft to < 30-ft	n/a	.	.	.	.	.
	Interior walls & partitions		.	n/a	.	.	.	.	.
Floor Construction including supporting beams and joists			.	n/a	.	.	.	.	.
Floor Ceiling Assembly			.	n/a	.	.	.	.	.
Columns Supporting Floors			.	n/a	.	.	.	.	.
Roof Construction including supporting beams and joists			.	n/a	.	.	.	.	.
Roof Ceiling Assembly			.	n/a	.	.	.	.	.
Columns Supporting Roof			.	n/a	.	.	.	.	.
Shaft Enclosures - Exit			.	n/a	.	.	.	.	.
Shaft Enclosures - Other			.	n/a	.	.	.	.	.
Corridor Separation			.	n/a	.	.	.	.	.
Occupancy Separation			.	n/a	.	.	.	.	.
Party / Fire Wall Separation			.	n/a	.	.	.	.	.
Smoke Barrier Separation			.	n/a	.	.	.	.	.
Tenant Separation			.	n/a	.	.	.	.	.
Incidental Use Separation	Furnace Rm > 400,000 btu's		.	n/a	.	.	.	.	.
	Boiler Rooms with > 15psi and 10 hp		.	n/a	.	.	.	.	.
	Refrig. Machine Rm		.	n/a	.	.	.	.	.
	Storage > 100 sf		.	n/a	.	.	.	.	.

* Indicate section number permitting reduction.

I. PERCENTAGE OF WALL OPENING CALCULATIONS

NOT APPLICABLE

FIRE SEPARATION DISTANCE (FEET) FROM PROPERTY LINES			ACTUAL SHOWN ON PLANS (%)
.	.	.	.
.	.	.	.
.	.	.	.

J. LIFE SAFETY SYSTEM REQUIREMENTS

Emergency Lighting: ■ NO ☐ YES Smoke Detection Systems: ■ NO ☐ YES ☐ PARTIAL .
Exit Signs: ■ NO ☐ YES Carbon Monoxide Detection: ■ NO ☐ YES
Fire Alarm: ■ NO ☐ YES

K. LIFE SAFETY PLAN REQUIREMENTS

Life Safety Plan Sheet #: .
☐ N/A Fire and/or smoke rated wall locations (Chapter 7)
☐ N/A Exterior wall opening area with respect to distance to assumed property lines (705.8)
☐ N/A Occupancy Use for each area as it relates to occupant load calculation (Table 1004.1.2)
☐ N/A Exit access travel distances (1017)
☐ N/A Common path of travel distances (1006.2.1 & 1006.3.2(1))
☐ N/A Maximum calculated occupant load capacity each exit door can accommodated based on egress width (1005.3)
☐ N/A A separate schematic plan indicating where fire rated floor/ceiling and/or roof structure is provided for purposes of occupancy separation
☐ N/A Location of doors with panic hardware (1010.1.10)
☐ N/A Location of doors with delayed egress locks and the amount of delay (1010.1.9.7)
☐ N/A Location of doors with electromagnetic egress locks (1010.1.9.9)
☐ N/A The square footage of each smoke compartment for Occupancy Classification I-2 (407.4)
☐ N/A Note any code exceptions or table notes that may have been utilized regarding the items above
☐ N/A Assumed and real property line locations
☐ N/A Occupant loads for each area
☐ N/A Dead end lengths (1020.4)
☐ N/A Clear exit widths for each exit door
☐ N/A Actual occupant load for each exit door
☐ N/A Location of doors equipped with hold-open devices
☐ N/A Location of emergency escape windows (1030)
☐ N/A The square footage of each fire area (202)

L. ACCESSIBLE DWELLING UNITS AND SLEEPING UNITS

ACCESSIBLE DWELLING UNITS (1107)

NOT APPLICABLE

TOTAL UNITS	ACCESSIBLE UNITS REQUIRED	PROVIDED	REQUIRED	PROVIDED	TYPE B UNITS REQUIRED	TYPE B UNITS PROVIDED	TOTAL ACCESSIBLE UNITS PROVIDED
.	.	.	.	.	.	.	.

M. ACCESSIBLE PARKING

ACCESSIBLE PARKING (1106)

NOT APPLICABLE

LOT OR PARKING AREA	TOTAL # OF PARKING SPACES REQUIRED	PROVIDED	# OF ACCESSIBLE SPACES PROVIDED: 5' ACCESS AISLE	132" ACCESS AISLE	SPACES WITH 8' ACCESS AISLE	TOTAL # ACCESSIBLE PROVIDED
.	.	.	.	.	.	.
.	.	.	.	.	.	.
TOTAL	.	.	.	.	.	.

N. PLUMBING FIXTURE REQUIREMENTS

(TABLE 2902.1) **Total Required / Total Provided**

NOT APPLICABLE

OCCUPANCY USE GROUP AND/OR SPACE DESIGNATION	WATERCLOSETS MALE	FEMALE				SHOWERS/ TUBS	DRINKING FOUNTAINS REGULAR	ACCESSIBLE
1st Floor	.	.	.	.	.	.	.	.
Basement	.	.	.	.	.	.	.	.
TOTAL	.	.	.	.	.	.	.	.

O. SPECIAL APPROVALS

SPECIAL APPROVAL: (Local Jurisdiction, Department of Insurance, OSC, DPI, DHHS, ICC, etc. , describe below)
.
.
.

SCHEDULE OF SPECIAL INSPECTIONS ☐ **No special inspections required for this project** ☐ **Special inspections required**
The following sheets comprise the required schedule of Special Inspections for this project:
The construction divisions which require special inspections for this project are as follows:

☐ **IT-1 Verification of Soils**
☐ **IT-2 Excavation and Fill**
☐ **IT-3 Piling and Drilling Piers**
☐ **IT-4 Modular Retaining Walls**
☐ **IT-5 Reinforced Concrete**
☐ **IT-6 Post Tension Slab**
☐ **IT-7 Pre-cast Concrete Erection**
☐ **IT-8 Pre-stressed Concrete**
☐ **IT-9 Inspection of Pre-Cast Fabricators**
☐ **IT-10 Inspection of Structural Steel Fabricators**
☐ **IT-11 Structural Masonry**
☐ **IT-12 Welding**
☐ **IT-13 High Strength Bolts & Steel Framing Insp.**
☐ **IT-14 Sprayed Fire-Resistance Materials**
☐ **IT-15 Exterior Insulation and Finish system**
☐ **IT-16 Seismic Resistance**
☐ **IT-17 Smoke Control**
☐ **IT-18 Detention Basin**
☐ **IT-19 Special Cases**

CHAPTER 17 Specific Special Inspetions: .

P. ENERGY SUMMARY

NOT APPLICABLE

BUILDING ENVELOPE:
ENERGY REQUIREMENTS:
The following data shall be considered minimum and any special attribute required to meet the energy code shall also be provided. Each Designer shall furnish the required portions of the project information for the plan data sheet. If energy cost budget method, state the annual energy cost budget vs. al
EXISTING BUILDING ENVELOPE COMP
CLIMATE ZONE: (North Carolina Energy Conservation Code NCECC 301.1) ☐ **3A** ☐ **4A** ☐ **5A**
METHOD OF COMPLIANCE: ☐ **Prescriptive** (ASHRAE 90.1) ☐ **Prescriptive** ☐ **No change to Building Envelope**
☐ **Performance** (ASHRAE 90.1) ☐ **Performance**
THERMAL ENVELOPE: (NCECC Chapter 4 and or 5)

Q. STRUCTURAL DESIGN

LOCATED ON STRUCTURAL SHEET: ☐ **NO** ☐ **YES** REFER TO SHEET NUMBER: .

R. MECHANICAL SUMMARY (NCECC 503)

LOCATED ON MECHANICAL SHEET: ☐ **NO** ☐ **YES** REFER TO SHEET NUMBER: .

S. ELECTRICAL SUMMARY (NCECC 505)

LOCATED ON ELECTRICAL SHEET: ☐ **NO** ☐ **YES** REFER TO SHEET NUMBER: .

neighboring concepts
NEIGHBORING CONCEPTS, PLLC
1635 West Trade Street, Suite 1A
Charlotte, North Carolina 28216
NC Cert. No: 51098

INCOMPLETE PLANS
DO NOT USE FOR R/W ACQUISITION

CITY OF RALEIGH
ENGINEERING SERVICES
DEPARTMENT

DOCUMENT NOT CONSIDERED FINAL UNLESS ALL SIGNATURES COMPLETED

CODE SUMMARY - STATION TYPE C - INTERMODAL

PROJECT: WAKE BRT NEW BERN AVE

DATE: 1/28/2022
SHEET BY: AMK
CHECKED BY: LAV
REVISIONS
NO. DATE
SCALES

SA-003

2018 APPENDIX B

BUILDING CODE SUMMARY FOR ALL COMMERCIAL PROJECTS

(EXCEPT 1 AND 2-FAMILY DWELLINGS AND TOWNHOUSES)

PROJECT SUMMARY / ALTERNATIVE MEANS OF COMPLIANCE

BUILDING DESCRIPTION: **Bus Rapid Transit Passenger Station Type D - Split Island Station**
Station is positioned in a roadway median, and includes access from a single end of the platform.
.

SCOPE OF WORK DETAILS: (If phased construction, please see plan submittal guidelines.) **Foundations, Structural Slabs, Canopies, Benches, Hand Rails, Signage, Electrical Lighting and Communications Systems**
.

☐ YES ■ NO **Does this project have air rights, easements, an assumed or deeded property line, no build easements or other circumstances similar to the aforementioned?** If yes, please provide a copy of the official documents.
OFFICIAL DOCUMENTS: **Refer to SHEET # XXXX**

ALTERNATIVE MEANS OF CODE COMPLIANCE:
☐ **Renovation using Chapter 34 (3412-Existing Buildings) in the NCSBC or NFPA 101 as an alternative for Code compliance**
Renovation projects only: If you are using Chapter 34 (3412-Existing Buildings) in the NCSBC or NFPA 101 as an alternative for Code compliance please schedule a preliminary review before submitting your project for review.
Notes for Plans Examiner and Inspectors: Please reporduce the evaluation form on the plans.
DATE OF PRELIMINARY REVIEW: **Review Date** COMPLIANCE LETTER: **Refer to SHEET # XXXX**

☐ **Engineering Judgement** (Approval needed from the Code Administrator is required before submitting)
DATE OF APPROVAL: **Approval Date** COMPLIANCE DOCUMENT: **Refer to SHEET # XXXX**

☐ **Industrial equipment with declaration documents attached** COMPLIANCE DOCUMENT: **Refer to SHEET # XXXX**
☐ **RTAP (Revision to approved plans.)**

A: PROJECT INFORMATION

NAME OF PROJECT: **WAKE BRT NEW BERN AVE**
ADDRESS: **New Bern Ave Corridor** ZIP CODE:
OWNER / AUTHORIZED AGENT: PHONE: **919-996-4123** E-MAIL: **mila.vega@raleighnc.gov**
OWNED BY: ☐ CITY / COUNTY ☐ PRIVATE ☐ STATE
CODE ENFORCEMENT JURISDICTION: ■ CITY **Raleigh** ☐ COUNTY **Wake** ☐ STATE **North Carolina**

B: CONTACT INFORMATION

DESIGNER	FIRM	NAME	LICENSE #	PHONE # with EXT.	E-MAIL
Architectural	Neighboring Concepts	Lucas Volkmar	11955	704-796-7204	luke@neighboringconcepts.com
Landscape Architect	Susan Hatchell LA	Susan Hatchell	528	919-838-9600	susan@susanhatchell.com
Civil	HNTB	John Hornbeck	047963	919-616-5570	ghornbeck@hntb.com
Electrical	Quality Consulting	Donald Jones	028708	803-207-5450	djones@qualityconsultingengineers.com
Communications	Quality Consulting	Donald Jones	028708	803-207-5450	djones@qualityconsultingengineers.com
Plumbing	N/A				
Mechanical	N/A				
Sprinkler-Standpipe	N/A				
Structural	Stewart	Lance Williams	26465	704-909-3520	lwilliams@stewartinc.com
Retaining Walls >5'	.	.	.	.	.
Other	.	.	.	.	.

C: CODE INFORMATION

2018 NC BUILDING CODE:
■ **New Building**
☐ **Addition**
☐ **Renovation**
☐ **1st Time Interior Completion**

☐ **Shell/Core -** Contact the local inspection jurisdiction for possible additional procedures and requirements
☐ **Phased Construction -** Contact the local inspection jurisdiction for possible additional procedures and requirements

2018 NC EXISTING BUILDING CODE:
Existing: ☐ Prescriptive ☐ Repair ☐ Renovation
Alteration: ☐ Level I ☐ Level II ☐ Level III
☐ Historic Property ☐ Change of Use

CONSTRUCTED: (date) **CURRENT OCCUPANCY(S)** (Ch. 3): .
RENOVATED: (date) **PROPOSED OCCUPANCY(S)** (Ch. 3): .

RISK CATEGORY (Table 1604.5):
Current: ☐ I ☐ II ☐ III ☐ IV
Proposed: ☐ I ☐ II ☐ III ☐ IV

D: BASIC BUILDING DATA

Construction Type: (Table 601) (Check all that apply) ☐ I-A ☐ II-A ☐ III-A ☐ IV ☐ V-A ☐ I-B ☐ II-B ☐ III-B ■ V-B
Sprinklers: (Chapter 9) ■ No ☐ Partial ☐ Yes ☐ NFPA 13 ☐ NFPA 13R ☐ NFPA 13D
Standpipes: (Section 905) ■ No ☐ Yes Class: ☐ I ☐ II ☐ III ☐ Wet ☐ Dry
Fire District: ■ No ☐ Yes **Flood Hazard Area:** (Appendix G) ■ No ☐ Yes
Special Inspections Required: ☐ No ■ Yes (Contact the local inspection jurisdiction for additional procedures and requirements)

E: GROSS BUILDING AREA TABLE

FLOOR	EXISTING (SF)	NEW (SF)	SUB-TOTAL
1st Floor	.	750	.
	.	.	.
TOTAL	.	750	.

F: ALLOWABLE AREA

Primary Occupancy Classification(s): (Chapter 3) - Select One
Assembly (303) ☐ A-1 ☐ A-2 ■ A-3 ☐ A-4 ☐ A-5
Business (304) ☐ B
Educational (305) ☐ E
Factory (306) ☐ F-1 Moderate ☐ F-2 Low
Hazardous (307) ☐ H-1 Detonate ☐ H-2 Deflagrate ☐ H-3 Combust ☐ H-4 Health ☐ H-5 HPM
Institutional (308) ☐ I-1 Condition ☐ 1 ☐ 2
☐ I-2 Condition ☐ 1 ☐ 2
☐ I-3 Condition ☐ 1 ☐ 2 ☐ 3 ☐ 4 ☐ 5
☐ I-4
Mercantile (309) ☐ M
Residential (310) ☐ R-1 ☐ R-2 ☐ R-3 ☐ R-4
Storage (311) ☐ S-1 Moderate ☐ S-2 Low
☐ High-piled
☐ Parking Garage ☐ Open ☐ Enclosed
☐ Repair Garage
Utility and Miscellaneous (312) ☐ U

Accessory Occupancies: (if applicable - 508) .
.
Incidental Uses: (if applicable - Table 509) .
.
Special Uses: (if applicable, Chapter 4 - List Code Sections) .
.
Special Provisions: (if applicable, Chapter 5 - List Code Sections) .
.

Mixsed Occupancy: If Applicable
■ No ☐ Yes Seperation: (HR.) . Exception: .
☐ **Incidental Use Separation: (508.2.5)** This seperation is not exempt as a Non-Separated Use (see exceptions).
☐ **Non-Separated Use: (508.3)**
The required type of construction for the building shall be determined by applying the height and area limitations for each of the applicable occupancies to the entire building. The most restrictive type of construction, so determined, shall apply to the entire building.
☐ **Separated Use: (508.4)**
See below for area calculations for each story, the area of the occupancy shall be such that the sum of the ratios of the actual floor area of each use divided by the allowable floor area for each use shall not exceed 1.

NOT APPLICABLE

Actual Area of Occupancy A / *Allowable Area of Occupancy A* + *Actual Area of Occupancy B* / *Allowable Area of Occupancy B* ... ≤ 1.00

Actual Area of Occupancy A / ***Allowable Area of Occupancy A*** + ***Actual Area of Occupancy B*** / ***Allowable Area of Occupancy B*** + ... ≤ 1.00

STORY NO.	DESCRIPTION AND USE	(A) BLDG AREA PER STORY (ACTUAL)	(B) TABLE 506.2[4] AREA	(C) AREA FOR FRONTAGE INCREASE[1,5]	(D) ALLOWABLE AREA PER STORY OR UNLIMITED[2,3]
1st Floor	.	.	.	.	.
Basement	.	.	.	.	.

1 Frontage area increses from Section 506.2 are computed thus:
a. Perimeter which fronts a public way or open space having 20 feet minimum width = ______ (F)
b. Total Building Perimeter
c. Ratio (F/P) = ______ (F/P)
d. W = Minimum width of public way = ______ (W)
e. Percent of frontage increase I_f = 100 [F/P - 0.25] x W/30 = ______ (%)
2 Unlimited area applicable under conditions of Section 507
3 Maximum Building Area = total number of stories in the building x D (506.2)
4 The maximum area of open parking garages must comply with Table 406.5.4. The maximum area of air traffic control towers must comply with Table 412.3.1.
5 Frontage increase is based on the unsprinklered area value in table 506.2

G: ALLOWABLE HEIGHT (CHAPTER 5)

	ALLOWABLE	SHOWN ON PLANS	CODE REFERENCE
Building Height in Feet	40'	16'	.
Building Height in Stories	1	1	.

1 Provide code reference if the "Shown on Plans" quantity is not based on Table 504.3 or 504.4.

H: FIRE PROTECTION REQUIREMENTS (CHAPTER 7)

BUILDING ELEMENT		FIRE SEPARATION DISTANCE (FEET)	RATING** REQUIRED	RATING** PROVIDED (W/ ___* REDUCTION)	DETAIL # AND SHEET #	DESIGN # FOR RATED ASSEMBLY	SHEET # FOR RATED PENETRATION	SHEET # FOR RATED JOINTS
Structural Frame, including columns, girders, trusses		.	0	0	.	.	.	.
Bearing Walls – Exterior	North	.	0	.	.	.	.	.
	East	.	n/a	.	.	.	.	.
	West	.	n/a	.	.	.	.	.
	South	.	n/a	.	.	.	.	.
	Interior	.	n/a	.	.	.	.	.
Non-Bearing Walls & Partitions – Exterior – North		< 5 ft	n/a	.	.	.	.	.
		≥ 5-ft to < 10-ft	n/a	.	.	.	.	.
		≥ 10-ft to < 30-ft	n/a	.	.	.	.	.
East		< 5 ft	n/a	.	.	.	.	.
		≥ 5-ft to < 10-ft	n/a	.	.	.	.	.
		≥ 10-ft to < 30-ft	n/a	.	.	.	.	.
West		< 5 ft	n/a	.	.	.	.	.
		≥ 5-ft to < 10-ft	n/a	.	.	.	.	.
		≥ 10-ft to < 30-ft	n/a	.	.	.	.	.
South		< 5 ft	n/a	.	.	.	.	.
		≥ 5-ft to < 10-ft	n/a	.	.	.	.	.
		≥ 10-ft to < 30-ft	n/a	.	.	.	.	.
Interior walls & partitions		.	n/a	.	.	.	.	.
Floor Construction including supporting beams and joists		.	n/a	.	.	.	.	.
Floor Ceiling Assembly		.	n/a	.	.	.	.	.
Columns Supporting Floors		.	n/a	.	.	.	.	.
Roof Construction including supporting beams and joists		.	n/a	.	.	.	.	.
Roof Ceiling Assembly		.	n/a	.	.	.	.	.
Columns Supporting Roof		.	n/a	.	.	.	.	.
Shaft Enclosures - Exit		.	n/a	.	.	.	.	.
Shaft Enclosures - Other		.	n/a	.	.	.	.	.
Corridor Separation		.	n/a	.	.	.	.	.
Occupancy Separation		.	n/a	.	.	.	.	.
Party / Fire Wall Separation		.	n/a	.	.	.	.	.
Smoke Barrier Separation		.	n/a	.	.	.	.	.
Tenant Separation		.	n/a	.	.	.	.	.
Incidental Use Separation	Furnace Rm > 400,000 btu's	.	n/a	.	.	.	.	.
	Boiler Rooms with > 15psi and 10 hp	.	n/a	.	.	.	.	.
	Refrig. Machine Rm	.	n/a	.	.	.	.	.
	Storage > 100 sf	.	n/a	.	.	.	.	.

* Indicate section number permitting reduction.

I. PERCENTAGE OF WALL OPENING CALCULATIONS

NOT APPLICABLE

FIRE SEPARATION DISTANCE (FEET) FROM PROPERTY LINES			ACTUAL SHOWN ON PLANS (%)
.	.	.	.
.	.	.	.
.	.	.	.

J. LIFE SAFETY SYSTEM REQUIREMENTS

Emergency Lighting: ■ NO ☐ YES
Exit Signs: ■ NO ☐ YES
Fire Alarm: ■ NO ☐ YES
Smoke Detection Systems: ■ NO ☐ YES ☐ PARTIAL .
Carbon Monoxide Detection: ■ NO ☐ YES

K. LIFE SAFETY PLAN REQUIREMENTS

Life Safety Plan Sheet #: .

☐ N/A Fire and/or smoke rated wall locations (Chapter 7)
☐ N/A Exterior wall opening area with respect to distance to assumed property lines (705.8)
☐ N/A Occupancy Use for each area as it relates to occupant load calculation (Table 1004.1.2)
☐ N/A Exit access travel distances (1017)
☐ N/A Common path of travel distances (1006.2.1 & 1006.3.2(1))
☐ N/A Maximum calculated occupant load capacity each exit door can accommodated based on egress width (1005.3)
☐ N/A A separate schematic plan indicating where fire rated floor/ceiling and/or roof structure is provided for purposes of occupancy separation
☐ N/A Location of doors with panic hardware (1010.1.10)
☐ N/A Location of doors with delayed egress locks and the amount of delay (1010.1.9.7)
☐ N/A Location of doors with electromagnetic egress locks (1010.1.9.9)
☐ N/A The square footage of each smoke compartment for Occupancy Classification I-2 (407.4)
☐ N/A Note any code exceptions or table notes that may have been utilized regarding the items above
☐ N/A Assumed and real property line locations
☐ N/A Occupant loads for each area
☐ N/A Dead end lengths (1020.4)
☐ N/A Clear exit widths for each exit door
☐ N/A Actual occupant load for each exit door
☐ N/A Location of doors equipped with hold-open devices
☐ N/A Location of emergency escape windows (1030)
☐ N/A The square footage of each fire area (202)

L. ACCESSIBLE DWELLING UNITS AND SLEEPING UNITS

ACCESSIBLE DWELLING UNITS (1107)

NOT APPLICABLE

TOTAL UNITS	ACCESSIBLE UNITS REQUIRED	PROVIDED	REQUIRED	PROVIDED	TYPE B UNITS REQUIRED	TYPE B UNITS PROVIDED	TOTAL ACCESSIBLE UNITS PROVIDED
.	.	.	.	.	.	.	.

M. ACCESSIBLE PARKING

ACCESSIBLE PARKING (1106)

NOT APPLICABLE

LOT OR PARKING AREA	TOTAL # OF PARKING SPACES REQUIRED	PROVIDED	# OF ACCESSIBLE SPACES PROVIDED: 5' ACCESS AISLE	132" ACCESS AISLE	SPACES WITH 8' ACCESS AISLE	TOTAL # ACCESSIBLE PROVIDED
.	.	.	.	.	.	.
.	.	.	.	.	.	.
TOTAL	.	.	.	.	.	.

N. PLUMBING FIXTURE REQUIREMENTS

(TABLE 2902.1) **Total Required / Total Provided**

NOT APPLICABLE

OCCUPANCY USE GROUP AND/OR SPACE DESIGNATION	WATERCLOSETS MALE	FEMALE				SHOWERS/ TUBS	DRINKING FOUNTAINS REGULAR	ACCESSIBLE
1st Floor	.	.	.	.	.	.	.	.
Basement	.	.	.	.	.	.	.	.
TOTAL	.	.	.	.	.	.	.	.

O. SPECIAL APPROVALS

SPECIAL APPROVAL: (Local Jurisdiction, Department of Insurance, OSC, DPI, DHHS, ICC, etc. , describe below)
.
.
.

SCHEDULE OF SPECIAL INSPECTIONS ☐ **No special inspections required for this project** ☐ **Special inspections required**

The following sheets comprise the required schedule of Special Inspections for this project:
The construction divisions which require special inspections for this project are as follows:

☐ **IT-1 Verification of Soils**
☐ **IT-2 Excavation and Fill**
☐ **IT-3 Piling and Drilling Piers**
☐ **IT-4 Modular Retaining Walls**
☐ **IT-5 Reinforced Concrete**
☐ **IT-6 Post Tension Slab**
☐ **IT-7 Pre-cast Concrete Erection**
☐ **IT-8 Pre-stressed Concrete**
☐ **IT-9 Inspection of Pre-Cast Fabricators**
☐ **IT-10 Inspection of Structural Steel Fabricators**
☐ **IT-11 Structural Masonry**
☐ **IT-12 Welding**
☐ **IT-13 High Strength Bolts & Steel Framing Insp.**
☐ **IT-14 Sprayed Fire-Resistance Materials**
☐ **IT-15 Exterior Insulation and Finish system**
☐ **IT-16 Seismic Resistance**
☐ **IT-17 Smoke Control**
☐ **IT-18 Detention Basin**
☐ **IT-19 Special Cases**

CHAPTER 17 Specific Special Inspetions: .

P. ENERGY SUMMARY

NOT APPLICABLE

BUILDING ENVELOPE:
ENERGY REQUIREMENTS:
The following data shall be considered minimum and any special attribute required to meet the energy code shall also be provided. Each Designer shall furnish the required portions of the project information for the plan data sheet. If energy cost budget method, state the annual energy cost budget vs. allowable annual energy cost budget.
EXISTING BUILDING ENVELOPE COMPLIANCE:
CLIMATE ZONE: (North Carolina Energy Conservation Code NCECC 301.1) ☐ **3A** ☐ **4A** ☐ **5A**
METHOD OF COMPLIANCE: ☐ **Prescriptive** (ASHRAE 90.1) ☐ **Prescriptive** ☐ **No change to Building Envelope**
☐ **Performance** (ASHRAE 90.1) ☐ **Performance**

THERMAL ENVELOPE: (NCECC Chapter 4 and or 5)

Q. STRUCTURAL DESIGN

LOCATED ON STRUCTURAL SHEET: ☐ **NO** ☐ **YES** REFER TO SHEET NUMBER: .

R. MECHANICAL SUMMARY (NCECC 503)

LOCATED ON MECHANICAL SHEET: ☐ **NO** ☐ **YES** REFER TO SHEET NUMBER: .

S. ELECTRICAL SUMMARY (NCECC 505)

LOCATED ON ELECTRICAL SHEET: ☐ **NO** ☐ **YES** REFER TO SHEET NUMBER: .

neighboring concepts
NEIGHBORING CONCEPTS, PLLC
1635 West Trade Street, Suite 1A
Charlotte, North Carolina 28216
NC Cert. No: 51098

INCOMPLETE PLANS
DO NOT USE FOR R/W ACQUISITION

CITY OF RALEIGH
ENGINEERING SERVICES DEPARTMENT

DOCUMENT NOT CONSIDERED FINAL UNLESS ALL SIGNATURES COMPLETED

CODE SUMMARY - STATION TYPE D - SPLIT ISLAND

PROJECT: WAKE BRT NEW BERN AVE

DATE: 1/28/2022
SHEET BY: AMK
CHECKED BY: LAV
REVISIONS
NO. DATE
SCALES

SA-004

1/24/2022 3:26:11 PM
BIM 360://20-007 Wake BRT/20-007_Wake BRT_R20_Arch_Central.rvt

2018 APPENDIX B

BUILDING CODE SUMMARY FOR ALL COMMERCIAL PROJECTS

(EXCEPT 1 AND 2-FAMILY DWELLINGS AND TOWNHOUSES)

PROJECT SUMMARY / ALTERNATIVE MEANS OF COMPLIANCE

BUILDING DESCRIPTION: **Bus Rapid Transit Passenger Station Type E - Peripheral Station**

Bus Shelter is positioned along a sidewalk a low density setting, and includes access from the front of the bus shelter.

.

SCOPE OF WORK DETAILS: (If phased construction, please see plan submittal guidelines.) **Foundations, Structural Slabs, Canopies, Benches, Hand Rails, Signage, Electrical Lighting and Communications Systems**

.

☐ YES **Does this project have air rights, easements, an assumed or deeded property line, no build easements or other circumstances**
■ NO **similar to the aforementioned?** If yes, please provide a copy of the official documents.
OFFICIAL DOCUMENTS: **Refer to SHEET # XXXX**

ALTERNATIVE MEANS OF CODE COMPLIANCE:

☐ **Renovation using Chapter 34 (3412-Existing Buildings) in the NCSBC or NFPA 101 as an alternative for Code compliance**
Renovation projects only: If you are using Chapter 34 (3412-Existing Buildings) in the NCSBC or NFPA 101 as an alternative for Code compliance please schedule a preliminary review before submitting your project for review.
Notes for Plans Examiner and Inspectors: Please reporduce the evaluation form on the plans.
DATE OF PRELIMINARY REVIEW: **Review Date** COMPLIANCE LETTER: **Refer to SHEET # XXXX**

☐ **Engineering Judgement** (Approval needed from the Code Administrator is required before submitting)
DATE OF APPROVAL: **Approval Date** COMPLIANCE DOCUMENT: **Refer to SHEET # XXXX**

☐ **Industrial equipment with declaration documents attached** COMPLIANCE DOCUMENT: **Refer to SHEET # XXXX**
☐ **RTAP (Revision to approved plans.)**

A: PROJECT INFORMATION

NAME OF PROJECT: **WAKE BRT NEW BERN AVE**
ADDRESS: **New Bern Ave Corridor** ZIP CODE:
OWNER / AUTHORIZED AGENT: PHONE: **919-996-4123** E-MAIL: **mila.vega@raleighnc.gov**
OWNED BY: ☐ CITY / COUNTY ☐ PRIVATE ☐ STATE
CODE ENFORCEMENT JURISDICTION: ■ CITY **Raleigh** ☐ COUNTY **Wake** ☐ STATE **North Carolina**

B: CONTACT INFORMATION

DESIGNER	FIRM	NAME	LICENSE #	PHONE # with EXT.	E-MAIL
Architectural	Neighboring Concepts	Lucas Volkmar	11955	704-796-7204	luke@neighboringconcepts.com
Landscape Architect	Susan Hatchell LA	Susan Hatchell	528	919-838-9600	susan@susanhatchell.com
Civil	HNTB	John Hornbeck	047963	919-616-5570	ghornbeck@hntb.com
Electrical	Quality Consulting	Donald Jones	028708	803-207-5450	djones@qualityconsultingengineers.com
Communications	Quality Consulting	Donald Jones	028708	803-207-5450	djones@qualityconsultingengineers.com
Plumbing	N/A				
Mechanical	N/A				
Sprinkler-Standpipe	N/A				
Structural	Stewart	Lance Williams	26465	704-909-3520	lwilliams@stewartinc.com
Retaining Walls >5'	.	.	.	.	.
Other	.	.	.	.	.

C: CODE INFORMATION

2018 NC BUILDING CODE:

■ **New Building**
☐ **Addition**
☐ **Renovation**
☐ **1st Time Interior Completion**

☐ **Shell/Core -** Contact the local inspection jurisdiction for possible additional procedures and requirements
☐ **Phased Construction -** Contact the local inspection jurisdiction for possible additional procedures and requirements

2018 NC EXISTING BUILDING CODE:

Existing: ☐ Prescriptive ☐ Repair ☐ Renovation
Alteration: ☐ Level I ☐ Level II ☐ Level III
☐ Historic Property ☐ Change of Use

CONSTRUCTED: (date) **CURRENT OCCUPANCY(S)** (Ch. 3): .
RENOVATED: (date) **PROPOSED OCCUPANCY(S)** (Ch. 3): .

RISK CATEGORY (Table 1604.5):
Current: ☐ I ☐ II ☐ III ☐ IV
Proposed: ☐ I ☐ II ☐ III ☐ IV

D: BASIC BUILDING DATA

Construction Type: (Table 601) (Check all that apply) ☐ I-A ☐ II-A ☐ III-A ☐ IV ☐ V-A ☐ I-B ☐ II-B ☐ III-B ■ V-B

Sprinklers: (Chapter 9) ■ No ☐ Partial ☐ Yes ☐ NFPA 13 ☐ NFPA 13R ☐ NFPA 13D

Standpipes: (Section 905) ■ No ☐ Yes Class: ☐ I ☐ II ☐ III ☐ Wet ☐ Dry

Fire District: ■ No ☐ Yes **Flood Hazard Area**: (Appendix G) ■ No ☐ Yes

Special Inspections Required: ☐ No ■ Yes (Contact the local inspection jurisdiction for additional procedures and requirements)

E: GROSS BUILDING AREA TABLE

FLOOR	EXISTING (SF)	NEW (SF)	SUB-TOTAL
1st Floor	.	150	.
	.	.	.
TOTAL	.	150	.

F: ALLOWABLE AREA

Primary Occupancy Classification(s): (Chapter 3) - Select One

Assembly (303) ☐ A-1 ☐ A-2 ■ A-3 ☐ A-4 ☐ A-5
Business (304) ☐ B
Educational (305) ☐ E
Factory (306) ☐ F-1 Moderate ☐ F-2 Low
Hazardous (307) ☐ H-1 Detonate ☐ H-2 Deflagrate ☐ H-3 Combust ☐ H-4 Health ☐ H-5 HPM
Institutional (308) ☐ I-1 Condition ☐ 1 ☐ 2
☐ I-2 Condition ☐ 1 ☐ 2
☐ I-3 Condition ☐ 1 ☐ 2 ☐ 3 ☐ 4 ☐ 5
☐ I-4

Mercantile (309) ☐ M
Residential (310) ☐ R-1 ☐ R-2 ☐ R-3 ☐ R-4
Storage (311) ☐ S-1 Moderate ☐ S-2 Low
☐ High-piled
☐ Parking Garage ☐ Open ☐ Enclosed
☐ Repair Garage
Utility and Miscellaneous (312) ☐ U

Accessory Occupancies: (if applicable - 508) .

Incidental Uses: (if applicable - Table 509) .

Special Uses: (if applicable, Chapter 4 - List Code Sections) .

Special Provisions: (if applicable, Chapter 5 - List Code Sections) .

Misxed Occupancy: If Applicable
■ No ☐ Yes Seperation: (HR.) . Exception: .

☐ **Incidental Use Separation: (508.2.5)** This seperation is not exempt as a Non-Separated Use (see exceptions).

☐ **Non-Separated Use: (508.3)**
The required type of construction for the building shall be determined by applying the height and area limitations for each of the applicable occupancies to the entire building. The most restrictive type of construction, so determined, shall apply to the entire building.

☐ **Separated Use: (508.4)**
See below for area calculations for each story, the area of the occupancy shall be such that the sum of the ratios of the actual floor area of each use divided by the allowable floor area for each use shall not exceed 1.

NOT APPLICABLE

Actual Area of Occupancy A / *Allowable Area of Occupancy A* + *Actual Area of Occupancy B* / *Allowable Area of Occupancy B* ... ≤ 1.00

Actual Area of Occupancy A / **Allowable Area of Occupancy A** + **Actual Area of Occupancy B** / **Allowable Area of Occupancy B** + ... ≤ 1.00

STORY NO.	DESCRIPTION AND USE	(A) BLDG AREA PER STORY (ACTUAL)	(B) TABLE 506.2[4] AREA	(C) AREA FOR FRONTAGE INCREASE[1,5]	(D) ALLOWABLE AREA PER STORY OR UNLIMITED[2,3]
1st Floor	.	.	.	.	.
Basement	.	.	.	.	.

1 Frontage area increases from Section 506.2 are computed thus:
a. Perimeter which fronts a public way or open space having 20 feet minimum width = ______ (F)
b. Total Building Perimeter
c. Ratio (F/P) = ______ (F/P)
d. W = Minimum width of public way = ______ (W)
e. Percent of frontage increase, I_f = 100 [F/P - 0.25] x W/30 = ______ (%)

2 Unlimited area applicable under conditions of Section 507

3 Maximum Building Area = total number of stories in the building x D (506.2)

4 The maximum area of open parking garages must comply with Table 406.5.4. The maximum area of air traffic control towers must comply with Table 412.3.1.

5 Frontage increase is based on the unsprinklered area value in table 506.2

G: ALLOWABLE HEIGHT (CHAPTER 5)

	ALLOWABLE	SHOWN ON PLANS	CODE REFERENCE
Building Height in Feet	40'	16'	.
Building Height in Stories	1	1	.

1 Provide code reference if the "Shown on Plans" quantity is not based on Table 504.3 or 504.4.

H: FIRE PROTECTION REQUIREMENTS (CHAPTER 7)

BUILDING ELEMENT			FIRE SEPARATION DISTANCE (FEET)	RATING** REQUIRED	RATING** PROVIDED (W/ ___* REDUCTION)	DETAIL # AND SHEET #	DESIGN # FOR RATED ASSEMBLY	SHEET # FOR RATED PENETRATION	SHEET # FOR RATED JOINTS
Structural Frame, including columns, girders, trusses			.	0	0	.	.	.	.
Bearing Walls	Exterior	North	.	0	.	.	.	.	.
		East	.	n/a	.	.	.	.	.
		West	.	n/a	.	.	.	.	.
		South	.	n/a	.	.	.	.	.
	Interior		.	n/a	.	.	.	.	.
Non-Bearing Walls & Partitions	Exterior North		< 5 ft	n/a	.	.	.	.	.
			≥ 5-ft to < 10-ft	n/a	.	.	.	.	.
			≥ 10-ft to < 30-ft	n/a	.	.	.	.	.
	Exterior East		< 5 ft	n/a	.	.	.	.	.
			≥ 5-ft to < 10-ft	n/a	.	.	.	.	.
			≥ 10-ft to < 30-ft	n/a	.	.	.	.	.
	Exterior West		< 5 ft	n/a	.	.	.	.	.
			≥ 5-ft to < 10-ft	n/a	.	.	.	.	.
			≥ 10-ft to < 30-ft	n/a	.	.	.	.	.
	Exterior South		< 5 ft	n/a	.	.	.	.	.
			≥ 5-ft to < 10-ft	n/a	.	.	.	.	.
			≥ 10-ft to < 30-ft	n/a	.	.	.	.	.
	Interior walls & partitions		.	n/a	.	.	.	.	.
Floor Construction including supporting beams and joists			.	n/a	.	.	.	.	.
Floor Ceiling Assembly			.	n/a	.	.	.	.	.
Columns Supporting Floors			.	n/a	.	.	.	.	.
Roof Construction including supporting beams and joists			.	n/a	.	.	.	.	.
Roof Ceiling Assembly			.	n/a	.	.	.	.	.
Columns Supporting Roof			.	n/a	.	.	.	.	.
Shaft Enclosures - Exit			.	n/a	.	.	.	.	.
Shaft Enclosures - Other			.	n/a	.	.	.	.	.
Corridor Separation			.	n/a	.	.	.	.	.
Occupancy Separation			.	n/a	.	.	.	.	.
Party / Fire Wall Separation			.	n/a	.	.	.	.	.
Smoke Barrier Separation			.	n/a	.	.	.	.	.
Tenant Separation			.	n/a	.	.	.	.	.
Incidental Use Separation	Furnace Rm > 400,000 btu's		.	n/a	.	.	.	.	.
	Boiler Rooms with > 15psi and 10 hp		.	n/a	.	.	.	.	.
	Refrig. Machine Rm		.	n/a	.	.	.	.	.
	Storage > 100 sf		.	n/a	.	.	.	.	.

* Indicate section number permitting reduction.

I. PERCENTAGE OF WALL OPENING CALCULATIONS

NOT APPLICABLE

FIRE SEPARATION DISTANCE (FEET) FROM PROPERTY LINES			ACTUAL SHOWN ON PLANS (%)
.	.	.	.
.	.	.	.
.	.	.	.

J. LIFE SAFETY SYSTEM REQUIREMENTS

Emergency Lighting: ■ NO ☐ YES
Exit Signs: ■ NO ☐ YES
Fire Alarm: ■ NO ☐ YES
Smoke Detection Systems: ■ NO ☐ YES ☐ PARTIAL .
Carbon Monoxide Detection: ■ NO ☐ YES

K. LIFE SAFETY PLAN REQUIREMENTS

Life Safety Plan Sheet #: .

☐ N/A Fire and/or smoke rated wall locations (Chapter 7)
☐ N/A Exterior wall opening area with respect to distance to assumed property lines (705.8)
☐ N/A Occupancy Use for each area as it relates to occupant load calculation (Table 1004.1.2)
☐ N/A Exit access travel distances (1017)
☐ N/A Common path of travel distances (1006.2.1 & 1006.3.2(1))
☐ N/A Maximum calculated occupant load capacity each exit door can accommodated based on egress width (1005.3)
☐ N/A A separate schematic plan indicating where fire rated floor/ceiling and/or roof structure is provided for purposes of occupancy separation
☐ N/A Location of doors with panic hardware (1010.1.10)
☐ N/A Location of doors with delayed egress locks and the amount of delay (1010.1.9.7)
☐ N/A Location of doors with electromagnetic egress locks (1010.1.9.9)
☐ N/A The square footage of each smoke compartment for Occupancy Classification I-2 (407.4)
☐ N/A Note any code exceptions or table notes that may have been utilized regarding the items above
☐ N/A Assumed and real property line locations
☐ N/A Occupant loads for each area
☐ N/A Dead end lengths (1020.4)
☐ N/A Clear exit widths for each exit door
☐ N/A Actual occupant load for each exit door
☐ N/A Location of doors equipped with hold-open devices
☐ N/A Location of emergency escape windows (1030)
☐ N/A The square footage of each fire area (202)

L. ACCESSIBLE DWELLING UNITS AND SLEEPING UNITS

ACCESSIBLE DWELLING UNITS (1107)

NOT APPLICABLE

TOTAL UNITS	ACCESSIBLE UNITS REQUIRED	PROVIDED	REQUIRED	PROVIDED	TYPE B UNITS REQUIRED	TYPE B UNITS PROVIDED	TOTAL ACCESSIBLE UNITS PROVIDED
.	.	.	.	.	.	.	.

M. ACCESSIBLE PARKING

ACCESSIBLE PARKING (1106)

NOT APPLICABLE

LOT OR PARKING AREA	TOTAL # OF PARKING SPACES REQUIRED	PROVIDED	# OF ACCESSIBLE SPACES PROVIDED: 5' ACCESS AISLE	132" ACCESS AISLE	SPACES WITH 8' ACCESS AISLE	TOTAL # ACCESSIBLE PROVIDED
.	.	.	.	.	.	.
.	.	.	.	.	.	.
TOTAL	.	.	.	.	.	.

N. PLUMBING FIXTURE REQUIREMENTS

(TABLE 2902.1) **Total Required / Total Provided**

NOT APPLICABLE

OCCUPANCY USE GROUP AND/OR SPACE DESIGNATION	WATERCLOSETS MALE	FEMALE	UNISEX	URINALS	LAVATORIES	SHOWERS/ TUBS	DRINKING FOUNTAINS REGULAR	DRINKING FOUNTAINS ACCESSIBLE
1st Floor	.	.	.	.	.	.	.	.
Basement	.	.	.	.	.	.	.	.
TOTAL	.	.	.	.	.	.	.	.

O. SPECIAL APPROVALS

SPECIAL APPROVAL: (Local Jurisdiction, Department of Insurance, OSC, DPI, DHHS, ICC, etc. , describe below)

.
.
.

SCHEDULE OF SPECIAL INSPECTIONS ☐ **No special inspections required for this project** ☐ **Special inspections required**

The following sheets comprise the required schedule of Special Inspections for this project:
The construction divisions which require special inspections for this project are as follows:

☐ **IT-1 Verification of Soils**
☐ **IT-2 Excavation and Fill**
☐ **IT-3 Piling and Drilling Piers**
☐ **IT-4 Modular Retaining Walls**
☐ **IT-5 Reinforced Concrete**
☐ **IT-6 Post Tension Slab**
☐ **IT-7 Pre-cast Concrete Erection**
☐ **IT-8 Pre-stressed Concrete**
☐ **IT-9 Inspection of Pre-Cast Fabricators**
☐ **IT-10 Inspection of Structural Steel Fabricators**
☐ **IT-11 Structural Masonry**
☐ **IT-12 Welding**
☐ **IT-13 High Strength Bolts & Steel Framing Insp.**
☐ **IT-14 Sprayed Fire-Resistance Materials**
☐ **IT-15 Exterior Insulation and Finish system**
☐ **IT-16 Seismic Resistance**
☐ **IT-17 Smoke Control**
☐ **IT-18 Detention Basin**
☐ **IT-19 Special Cases**

CHAPTER 17 Specific Special Inspetions: .

P. ENERGY SUMMARY

BUILDING ENVELOPE:
ENERGY REQUIREMENTS:
The following data shall be considered minimum and any special attribute required to meet the energy code shall also be provided. Each Designer shall furnish the required portions of the project information for the plan data sheet. If energy cost budget method, state the annual energy cost budget vs. al...

NOT APPLICABLE

EXISTING BUILDING ENVELOPE COMP...

CLIMATE ZONE: (North Carolina Energy Conservation Code NCECC 301.1) ☐ **3A** ☐ **4A** ☐ **5A**

METHOD OF COMPLIANCE: ☐ **Prescriptive** (ASHRAE 90.1) ☐ **Prescriptive** ☐ **No change to Building Envelope**
☐ **Performance** (ASHRAE 90.1) ☐ **Performance**

THERMAL ENVELOPE: (NCECC Chapter 4 and or 5)

Q. STRUCTURAL DESIGN

LOCATED ON STRUCTURAL SHEET: ☐ **NO** ☐ **YES** REFER TO SHEET NUMBER: .

R. MECHANICAL SUMMARY (NCECC 503)

LOCATED ON MECHANICAL SHEET: ☐ **NO** ☐ **YES** REFER TO SHEET NUMBER: .

S. ELECTRICAL SUMMARY (NCECC 505)

LOCATED ON ELECTRICAL SHEET: ☐ **NO** ☐ **YES** REFER TO SHEET NUMBER: .

neighboring concepts
NEIGHBORING CONCEPTS, PLLC
1635 West Trade Street, Suite 1A
Charlotte, North Carolina 28216
NC Cert. No: 51098

INCOMPLETE PLANS
DO NOT USE FOR R/W ACQUISITION

CITY OF RALEIGH
ENGINEERING SERVICES
DEPARTMENT

DOCUMENT NOT CONSIDERED FINAL UNLESS ALL SIGNATURES COMPLETED

CODE SUMMARY - STATION TYPE E - PERIPHERAL

PROJECT: WAKE BRT NEW BERN AVE

DATE:	1/28/2022
SHEET BY:	AMK
CHECKED BY:	LAV

REVISIONS

NO.	DATE

SCALES

SA-005

1/24/2022 3:26:12 PM
BIM 360://20-007 Wake BRT/20-007_Wake BRT_R20_Arch_Central.rvt

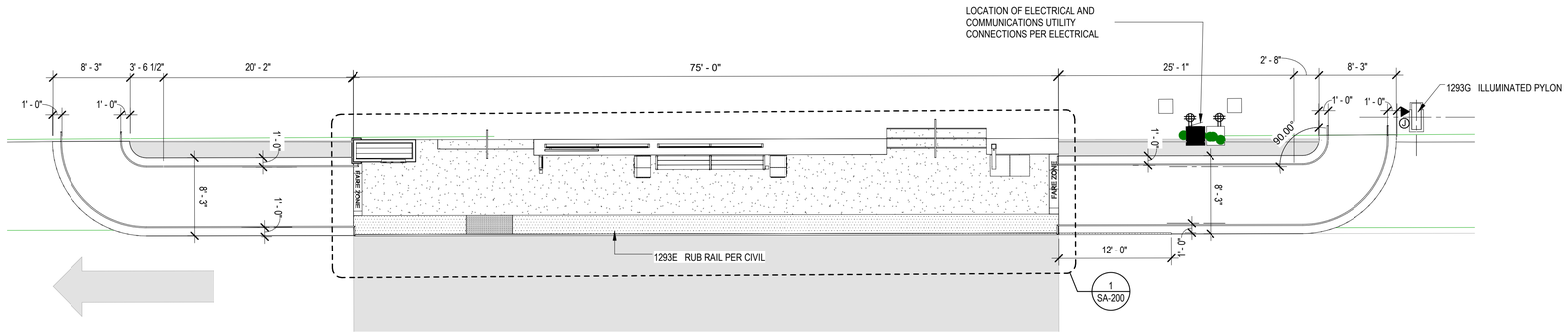

1 SA-100

GORALEIGH STATION

SCALE: 1/8" = 1'-0"

GENERAL NOTES

SEE DISCIPLINE SHEETS FOR DISCIPLINE SPECIFIC NOTES

CONSTRUCTION NOTES

1. GC TO COORDINATE WITH VENDORS/INSTALLERS OF OWNER PROVIDED EQUIPMENT, FURNITURE, AND SYSTEMS ITEMS REGARDING DELIVERIES AND SCHEDULES.
2. REFER TO SA-300 SERIES FOR TYPICAL DETAILS AND COORDINATE WITH ELECTRICAL DRAWINGS FOR ADDITIONAL REQUIREMENTS AT BUILT-IN ELEMENTS.
3. TYPICAL DIMENSIONS ARE TO FINISH FACE OF CONSTRUCTION UNLESS OTHERWISE NOTED.
4. ALL RAMPS SHALL NOT EXCEED 1:12 SLOPE, TYP. WALKING SURFACES WITH SLOPES GREATER THAN 1:20 SHALL HAVE RAILINGS PER SA-300 SERIES. REFER TO CIVIL FOR RAMP INFORMATION, TYP.

SPECIALTY EQUIPMENT NOTES

1. REFER TO STATION TYPE SA-200 SERIES FOR EQUIPMENT SCHEDULE INCLUDING BASIS OF DESIGN INFORMATION.
2. ALL SPECIALTY EQUIPMENT SHALL BE INSTALLED PER EQUIPMENT MANUFACTURER'S RECOMMENDATIONS, TYP.

CONSTRUCTION KEYNOTES

A	WALL FINISH MATERIAL VARIES BY STATION, REFER TO SA-300 SERIES FOR TYPICAL DETAILS.
B	BIKE RACK. COORDINATE WITH CITRIX BIKE STATIONS AS REQUIRED.

KEYNOTE LEGEND

NUMBER	KEYNOTE
1293E	RUB RAIL PER CIVIL
1293G	ILLUMINATED PYLON

neighboring concepts
NEIGHBORING CONCEPTS, PLLC
1635 West Trade Street, Suite 1A
Charlotte, North Carolina 28216
NC Cert. No: 51098

INCOMPLETE PLANS
DO NOT USE FOR R/W ACQUISITION

CITY OF RALEIGH
ENGINEERING SERVICES
DEPARTMENT

DOCUMENT NOT CONSIDERED FINAL UNLESS ALL SIGNATURES COMPLETED

GO RALEIGH STATION

PROJECT:
WAKE BRT
NEW BERN AVE

DATE:	1/28/2022
SHEET BY:	AMK
CHECKED BY:	LAV

REVISIONS

NO.	DATE

SCALES

SA-100

2/1/2022 9:11:42 AM
P:\GO Wake\GO Wake BRT\20-007_Wake BRT\20-007_Wake BRT_R20_Arch_Central.rvt

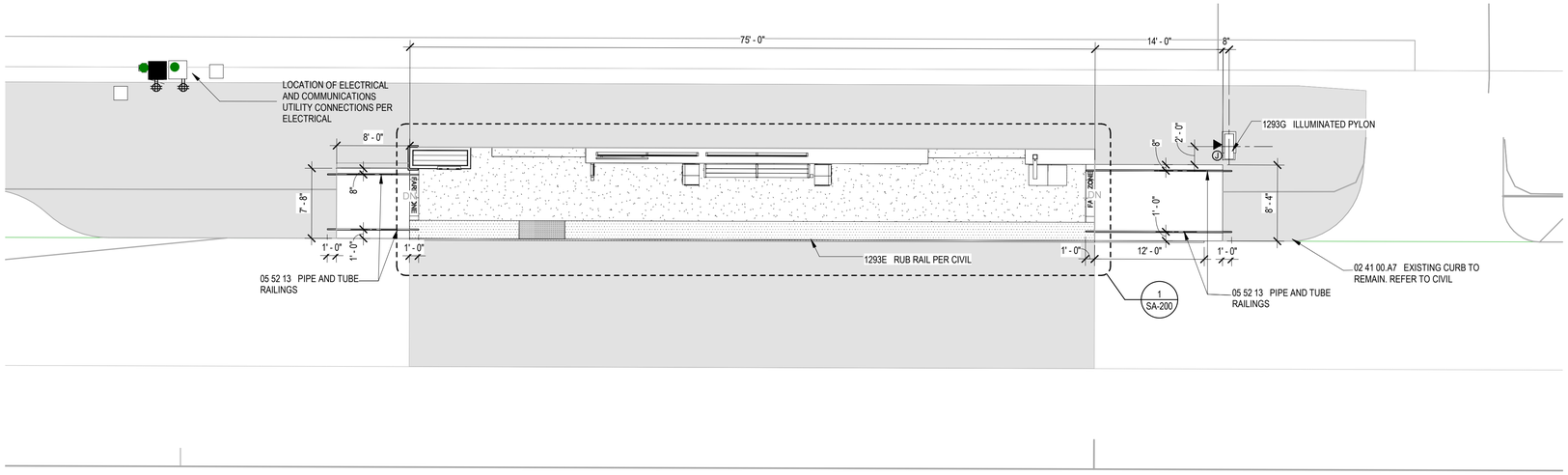

1 SA-110

EDENTON AT BLOUNT

SCALE: 1/8" = 1'-0"

neighboring concepts

NEIGHBORING CONCEPTS, PLLC
1635 West Trade Street, Suite 1A
Charlotte, North Carolina 28216
NC Cert. No: 51098

INCOMPLETE PLANS
DO NOT USE FOR R/W ACQUISITION

KEYNOTE LEGEND

NUMBER	KEYNOTE
02 41 00.A7	EXISTING CURB TO REMAIN. REFER TO CIVIL
05 52 13	PIPE AND TUBE RAILINGS
1293E	RUB RAIL PER CIVIL
1293G	ILLUMINATED PYLON

GENERAL NOTES

SEE DISCIPLINE SHEETS FOR DISCIPLINE SPECIFIC NOTES

CONSTRUCTION NOTES

1. GC TO COORDINATE WITH VENDORS/INSTALLERS OF OWNER PROVIDED EQUIPMENT, FURNITURE, AND SYSTEMS ITEMS REGARDING DELIVERIES AND SCHEDULES.
2. REFER TO SA-300 SERIES FOR TYPICAL DETAILS AND COORDINATE WITH ELECTRICAL DRAWINGS FOR ADDITIONAL REQUIREMENTS AT BUILT-IN ELEMENTS.
3. TYPICAL DIMENSIONS ARE TO FINISH FACE OF CONSTRUCTION UNLESS OTHERWISE NOTED.
4. ALL RAMPS SHALL NOT EXCEED 1:12 SLOPE, TYP. WALKING SURFACES WITH SLOPES GREATER THAN 1:20 SHALL HAVE RAILINGS PER SA-300 SERIES. REFER TO CIVIL FOR RAMP INFORMATION, TYP.

SPECIALTY EQUIPMENT NOTES

1. REFER TO STATION TYPE SA-200 SERIES FOR EQUIPMENT SCHEDULE INCLUDING BASIS OF DESIGN INFORMATION.
2. ALL SPECIALTY EQUIPMENT SHALL BE INSTALLED PER EQUIPMENT MANUFACTURER'S RECOMMENDATIONS, TYP.

CONSTRUCTION KEYNOTES

A	WALL FINISH MATERIAL VARIES BY STATION, REFER TO SA-300 SERIES FOR TYPICAL DETAILS.
B	BIKE RACK. COORDINATE WITH CITRIX BIKE STATIONS AS REQUIRED.

CITY OF RALEIGH
ENGINEERING SERVICES DEPARTMENT

DOCUMENT NOT CONSIDERED FINAL UNLESS ALL SIGNATURES COMPLETED

EDENTON AT BLOUNT

PROJECT:
WAKE BRT
NEW BERN AVE

DATE:	1/28/2022
SHEET BY:	AMK
CHECKED BY:	LAV

REVISIONS

NO.	DATE

SCALES

SA-110

2/1/2022 9:13:44 AM
P:\BRT\WAKE\DWG\Wake BRT\SA\007_Wake BRT SA_R20_Arch_Central.rvt

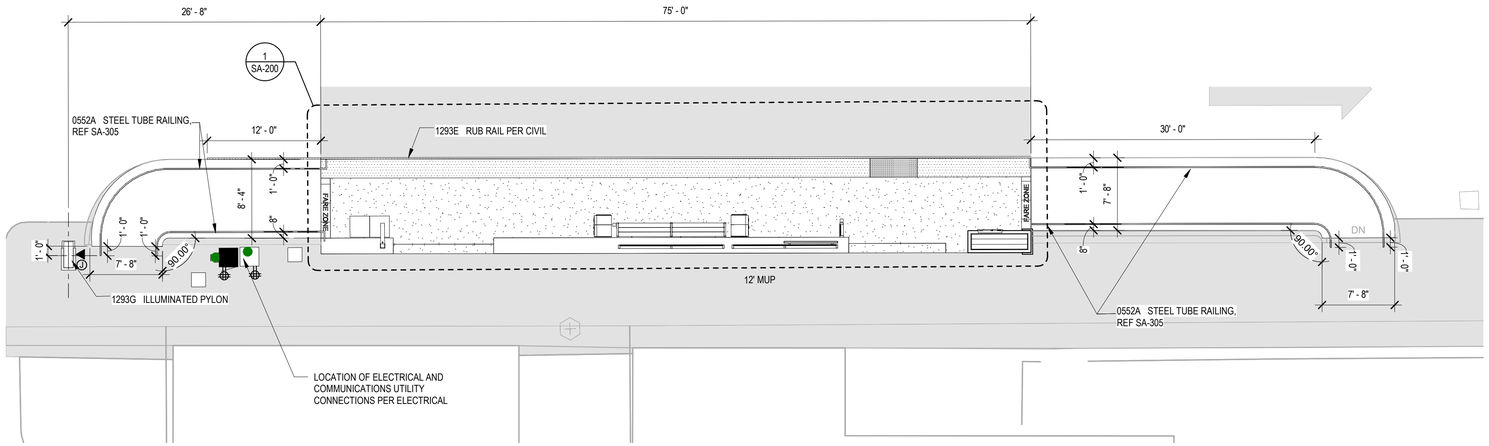

1 SA-111

MORGAN AT BLOUNT

SCALE: 1/8" = 1'-0"

neighboring concepts
NEIGHBORING CONCEPTS, PLLC
1635 West Trade Street, Suite 1A
Charlotte, North Carolina 28216
NC Cert. No: 51098

INCOMPLETE PLANS
DO NOT USE FOR R/W ACQUISITION

KEYNOTE LEGEND

NUMBER	KEYNOTE
0552A	STEEL TUBE RAILING, REF SA-305
1293E	RUB RAIL PER CIVIL
1293G	ILLUMINATED PYLON

GENERAL NOTES

SEE DISCIPLINE SHEETS FOR DISCIPLINE SPECIFIC NOTES

CONSTRUCTION NOTES

1. GC TO COORDINATE WITH VENDORS/INSTALLERS OF OWNER PROVIDED EQUIPMENT, FURNITURE, AND SYSTEMS ITEMS REGARDING DELIVERIES AND SCHEDULES.
2. REFER TO SA-300 SERIES FOR TYPICAL DETAILS AND COORDINATE WITH ELECTRICAL DRAWINGS FOR ADDITIONAL REQUIREMENTS AT BUILT-IN ELEMENTS.
3. TYPICAL DIMENSIONS ARE TO FINISH FACE OF CONSTRUCTION UNLESS OTHERWISE NOTED.
4. ALL RAMPS SHALL NOT EXCEED 1:12 SLOPE, TYP. WALKING SURFACES WITH SLOPES GREATER THAN 1:20 SHALL HAVE RAILINGS PER SA-300 SERIES. REFER TO CIVIL FOR RAMP INFORMATION, TYP.

SPECIALTY EQUIPMENT NOTES

1. REFER TO STATION TYPE SA-200 SERIES FOR EQUIPMENT SCHEDULE INCLUDING BASIS OF DESIGN INFORMATION.
2. ALL SPECIALTY EQUIPMENT SHALL BE INSTALLED PER EQUIPMENT MANUFACTURER'S RECOMMENDATIONS, TYP.

CONSTRUCTION KEYNOTES

A	WALL FINISH MATERIAL VARIES BY STATION, REFER TO SA-300 SERIES FOR TYPICAL DETAILS.
B	BIKE RACK. COORDINATE WITH CITRIX BIKE STATIONS AS REQUIRED.

CITY OF RALEIGH
ENGINEERING SERVICES
DEPARTMENT

DOCUMENT NOT CONSIDERED FINAL
UNLESS ALL SIGNATURES COMPLETED

MORGAN AT BLOUNT

PROJECT:
WAKE BRT
NEW BERN AVE

DATE:	1/28/2022
SHEET BY:	AMK
CHECKED BY:	LAV

REVISIONS

NO.	DATE

SCALES

SA-111

2/1/2022 9:15:54 AM
P:\BRT\DESIGN\Wake BRT\Drawings\Wake BRT\Sheets\SA-111_Wake BRT_R20_Arch_Central.rvt

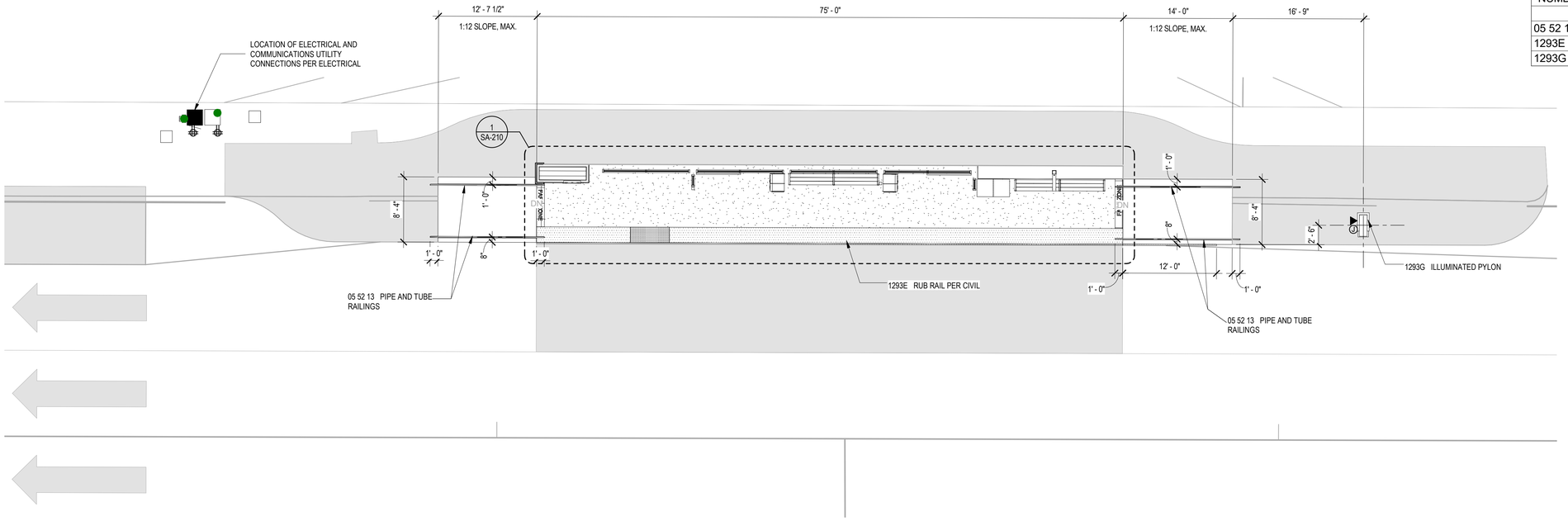

1 SA-120 **EDENTON AT SWAIN**

SCALE: 1/8" = 1'-0"

KEYNOTE LEGEND

NUMBER	KEYNOTE
05 52 13	PIPE AND TUBE RAILINGS
1293E	RUB RAIL PER CIVIL
1293G	ILLUMINATED PYLON

GENERAL NOTES

SEE DISCIPLINE SHEETS FOR DISCIPLINE SPECIFIC NOTES

CONSTRUCTION NOTES

1. GC TO COORDINATE WITH VENDORS/INSTALLERS OF OWNER PROVIDED EQUIPMENT, FURNITURE, AND SYSTEMS ITEMS REGARDING DELIVERIES AND SCHEDULES.
2. REFER TO SA-300 SERIES FOR TYPICAL DETAILS AND COORDINATE WITH ELECTRICAL DRAWINGS FOR ADDITIONAL REQUIREMENTS AT BUILT-IN ELEMENTS.
3. TYPICAL DIMENSIONS ARE TO FINISH FACE OF CONSTRUCTION UNLESS OTHERWISE NOTED.
4. ALL RAMPS SHALL NOT EXCEED 1:12 SLOPE, TYP. WALKING SURFACES WITH SLOPES GREATER THAN 1:20 SHALL HAVE RAILINGS PER SA-300 SERIES. REFER TO CIVIL FOR RAMP INFORMATION, TYP.

SPECIALTY EQUIPMENT NOTES

1. REFER TO STATION TYPE SA-200 SERIES FOR EQUIPMENT SCHEDULE INCLUDING BASIS OF DESIGN INFORMATION.
2. ALL SPECIALTY EQUIPMENT SHALL BE INSTALLED PER EQUIPMENT MANUFACTURER'S RECOMMENDATIONS, TYP.

CONSTRUCTION KEYNOTES

A	WALL FINISH MATERIAL VARIES BY STATION, REFER TO SA-300 SERIES FOR TYPICAL DETAILS.
B	BIKE RACK. COORDINATE WITH CITRIX BIKE STATIONS AS REQUIRED.

neighboring concepts
NEIGHBORING CONCEPTS, PLLC
1635 West Trade Street, Suite 1A
Charlotte, North Carolina 28216
NC Cert. No: 51098

INCOMPLETE PLANS
DO NOT USE FOR R/W ACQUISITION

CITY OF RALEIGH
ENGINEERING SERVICES
DEPARTMENT

DOCUMENT NOT CONSIDERED FINAL UNLESS ALL SIGNATURES COMPLETED

EDENTON AT SWAIN

PROJECT:
WAKE BRT
NEW BERN AVE

DATE:	1/28/2022
SHEET BY:	AMK
CHECKED BY:	LAV

REVISIONS

NO.	DATE

SCALES

SA-120

2/1/2022 9:18:36 AM
R:\BRT\2020\07 Wake BRT\20-007_Wake BRT_BID_Arch_Central.rvt

neighboring concepts
NEIGHBORING CONCEPTS, PLLC
1635 West Trade Street, Suite 1A
Charlotte, North Carolina 28216
NC Cert. No: 51098

INCOMPLETE PLANS
DO NOT USE FOR R/W ACQUISITION

KEYNOTE LEGEND

NUMBER	KEYNOTE
05 52 13	PIPE AND TUBE RAILINGS
1293C	BICYCLE RACKS
1293G	ILLUMINATED PYLON

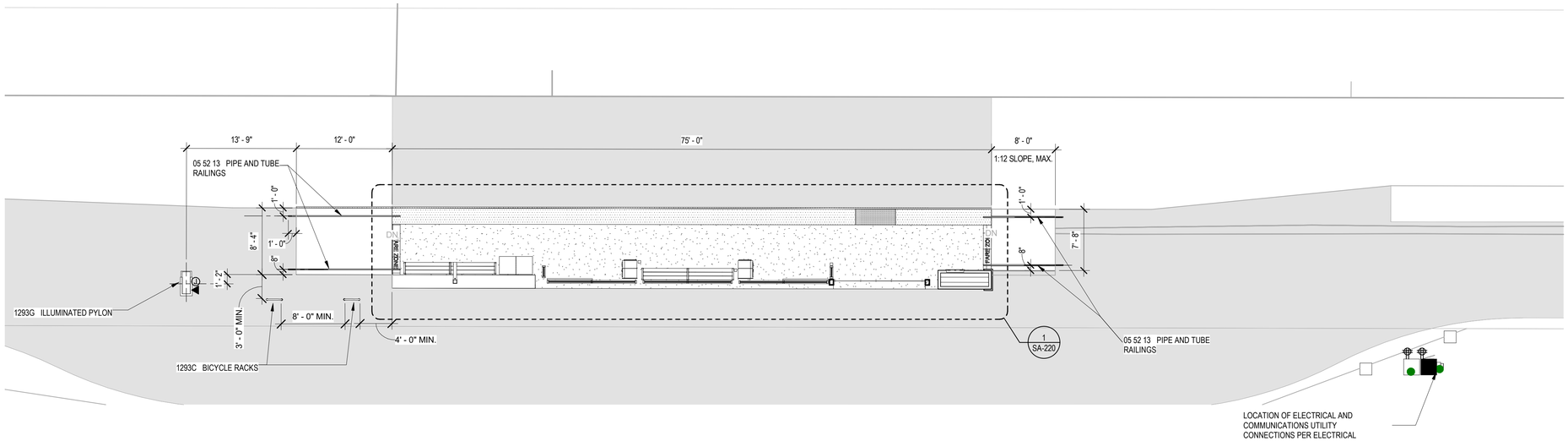

1 SA-121

NEW BERN AT SWAIN

SCALE: 1/8" = 1'-0"

GENERAL NOTES

SEE DISCIPLINE SHEETS FOR DISCIPLINE SPECIFIC NOTES

CONSTRUCTION NOTES

1. GC TO COORDINATE WITH VENDORS/INSTALLERS OF OWNER PROVIDED EQUIPMENT, FURNITURE, AND SYSTEMS ITEMS REGARDING DELIVERIES AND SCHEDULES.
2. REFER TO SA-300 SERIES FOR TYPICAL DETAILS AND COORDINATE WITH ELECTRICAL DRAWINGS FOR ADDITIONAL REQUIREMENTS AT BUILT-IN ELEMENTS.
3. TYPICAL DIMENSIONS ARE TO FINISH FACE OF CONSTRUCTION UNLESS OTHERWISE NOTED.
4. ALL RAMPS SHALL NOT EXCEED 1:12 SLOPE, TYP. WALKING SURFACES WITH SLOPES GREATER THAN 1:20 SHALL HAVE RAILINGS PER SA-300 SERIES. REFER TO CIVIL FOR RAMP INFORMATION, TYP.

SPECIALTY EQUIPMENT NOTES

1. REFER TO STATION TYPE SA-200 SERIES FOR EQUIPMENT SCHEDULE INCLUDING BASIS OF DESIGN INFORMATION.
2. ALL SPECIALTY EQUIPMENT SHALL BE INSTALLED PER EQUIPMENT MANUFACTURER'S RECOMMENDATIONS, TYP.

CONSTRUCTION KEYNOTES

A	WALL FINISH MATERIAL VARIES BY STATION, REFER TO SA-300 SERIES FOR TYPICAL DETAILS.
B	BIKE RACK. COORDINATE WITH CITRIX BIKE STATIONS AS REQUIRED.

CITY OF RALEIGH
ENGINEERING SERVICES DEPARTMENT

DOCUMENT NOT CONSIDERED FINAL UNLESS ALL SIGNATURES COMPLETED

NEW BERN AT SWAIN

PROJECT:
WAKE BRT
NEW BERN AVE

DATE:	1/28/2022
SHEET BY:	AMK
CHECKED BY:	LAV

REVISIONS

NO.	DATE

SCALES

SA-121

2/1/2022 9:20:48 AM
P:\BRT\DESIGN\Wake BRT\Drawings\Wake BRT\SA\007_Wake BRT_R2\0_Arch_Central.rvt

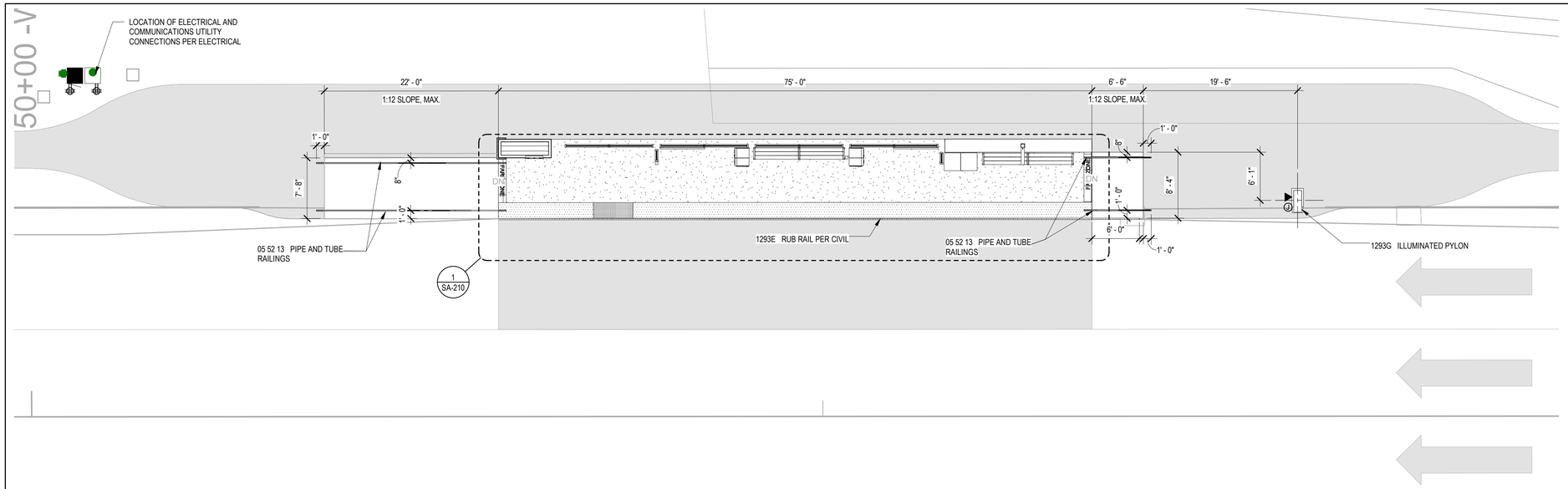

1
SA-130

EDENTON AT TARBORO

SCALE: 1/8" = 1'-0"

neighboring concepts

NEIGHBORING CONCEPTS, PLLC
1635 West Trade Street, Suite 1A
Charlotte, North Carolina 28216
NC Cert. No: 51098

INCOMPLETE PLANS
DO NOT USE FOR R/W ACQUISITION

KEYNOTE LEGEND

NUMBER	KEYNOTE
05 52 13	PIPE AND TUBE RAILINGS
1293E	RUB RAIL PER CIVIL
1293G	ILLUMINATED PYLON

GENERAL NOTES

SEE DISCIPLINE SHEETS FOR DISCIPLINE SPECIFIC NOTES

CONSTRUCTION NOTES

1. GC TO COORDINATE WITH VENDORS/INSTALLERS OF OWNER PROVIDED EQUIPMENT, FURNITURE, AND SYSTEMS ITEMS REGARDING DELIVERIES AND SCHEDULES.
2. REFER TO SA-300 SERIES FOR TYPICAL DETAILS AND COORDINATE WITH ELECTRICAL DRAWINGS FOR ADDITIONAL REQUIREMENTS AT BUILT-IN ELEMENTS.
3. TYPICAL DIMENSIONS ARE TO FINISH FACE OF CONSTRUCTION UNLESS OTHERWISE NOTED.
4. ALL RAMPS SHALL NOT EXCEED 1:12 SLOPE, TYP. WALKING SURFACES WITH SLOPES GREATER THAN 1:20 SHALL HAVE RAILINGS PER SA-300 SERIES. REFER TO CIVIL FOR RAMP INFORMATION, TYP.

SPECIALTY EQUIPMENT NOTES

1. REFER TO STATION TYPE SA-200 SERIES FOR EQUIPMENT SCHEDULE INCLUDING BASIS OF DESIGN INFORMATION.
2. ALL SPECIALTY EQUIPMENT SHALL BE INSTALLED PER EQUIPMENT MANUFACTURER'S RECOMMENDATIONS, TYP.

CONSTRUCTION KEYNOTES

A	WALL FINISH MATERIAL VARIES BY STATION, REFER TO SA-300 SERIES FOR TYPICAL DETAILS.
B	BIKE RACK. COORDINATE WITH CITRIX BIKE STATIONS AS REQUIRED.

CITY OF RALEIGH
ENGINEERING SERVICES DEPARTMENT

DOCUMENT NOT CONSIDERED FINAL UNLESS ALL SIGNATURES COMPLETED

EDENTON AT TARBORO

PROJECT: WAKE BRT NEW BERN AVE

DATE:	1/28/2022
SHEET BY:	AMK
CHECKED BY:	LAV

REVISIONS

NO.	DATE

SCALES

SA-130

2/1/2022 9:28:58 AM
BIM 360://20-007 Wake BRT/20-007_Wake BRT_R20_Arch_Central.rvt

neighboring concepts
NEIGHBORING CONCEPTS, PLLC
1635 West Trade Street, Suite 1A
Charlotte, North Carolina 28216
NC Cert. No: 51098

INCOMPLETE PLANS
DO NOT USE FOR R/W ACQUISITION

KEYNOTE LEGEND

NUMBER	KEYNOTE
0552A	STEEL TUBE RAILING, REF SA-305
1293C	BICYCLE RACKS
1293E	RUB RAIL PER CIVIL
1293G	ILLUMINATED PYLON

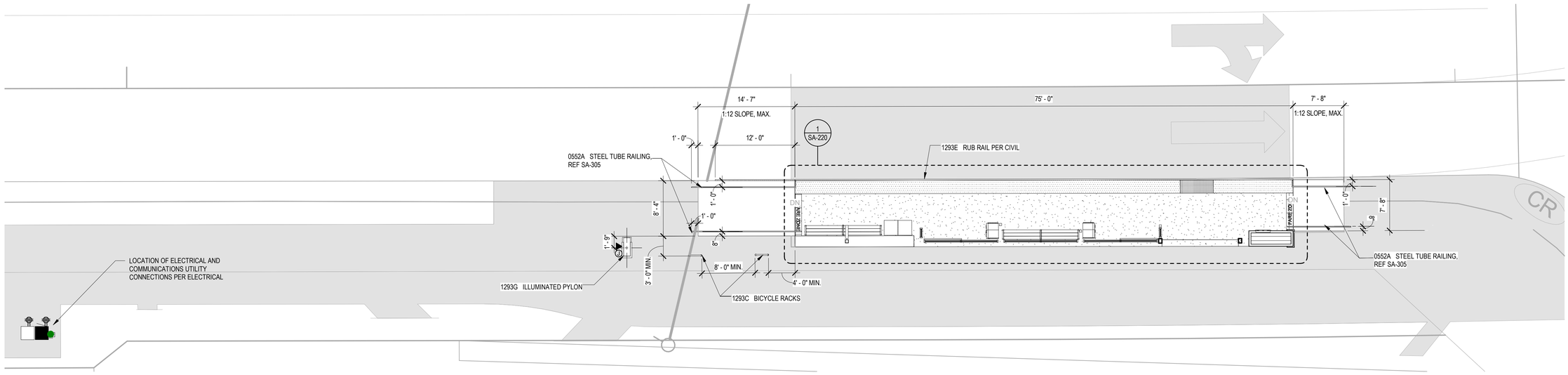

1
SA-131
NEW BERN AT TARBORO
SCALE: 1/8" = 1'-0"

GENERAL NOTES

SEE DISCIPLINE SHEETS FOR DISCIPLINE SPECIFIC NOTES

CONSTRUCTION NOTES

1. GC TO COORDINATE WITH VENDORS/INSTALLERS OF OWNER PROVIDED EQUIPMENT, FURNITURE, AND SYSTEMS ITEMS REGARDING DELIVERIES AND SCHEDULES.
2. REFER TO SA-300 SERIES FOR TYPICAL DETAILS AND COORDINATE WITH ELECTRICAL DRAWINGS FOR ADDITIONAL REQUIREMENTS AT BUILT-IN ELEMENTS.
3. TYPICAL DIMENSIONS ARE TO FINISH FACE OF CONSTRUCTION UNLESS OTHERWISE NOTED.
4. ALL RAMPS SHALL NOT EXCEED 1:12 SLOPE, TYP. WALKING SURFACES WITH SLOPES GREATER THAN 1:20 SHALL HAVE RAILINGS PER SA-300 SERIES. REFER TO CIVIL FOR RAMP INFORMATION, TYP.

SPECIALTY EQUIPMENT NOTES

1. REFER TO STATION TYPE SA-200 SERIES FOR EQUIPMENT SCHEDULE INCLUDING BASIS OF DESIGN INFORMATION.
2. ALL SPECIALTY EQUIPMENT SHALL BE INSTALLED PER EQUIPMENT MANUFACTURER'S RECOMMENDATIONS, TYP.

CONSTRUCTION KEYNOTES

A	WALL FINISH MATERIAL VARIES BY STATION, REFER TO SA-300 SERIES FOR TYPICAL DETAILS.
B	BIKE RACK. COORDINATE WITH CITRIX BIKE STATIONS AS REQUIRED.

CITY OF RALEIGH
ENGINEERING SERVICES DEPARTMENT

DOCUMENT NOT CONSIDERED FINAL UNLESS ALL SIGNATURES COMPLETED

NEW BERN AT TARBORO

PROJECT: WAKE BRT NEW BERN AVE

DATE:	1/28/2022
SHEET BY:	AMK
CHECKED BY:	LAV

REVISIONS

NO.	DATE

SCALES

SA-131

2/1/2022 9:40:21 AM
BIM 360://20-007 Wake BRT/20-007_Wake BRT_R20_Arch_Central.rvt

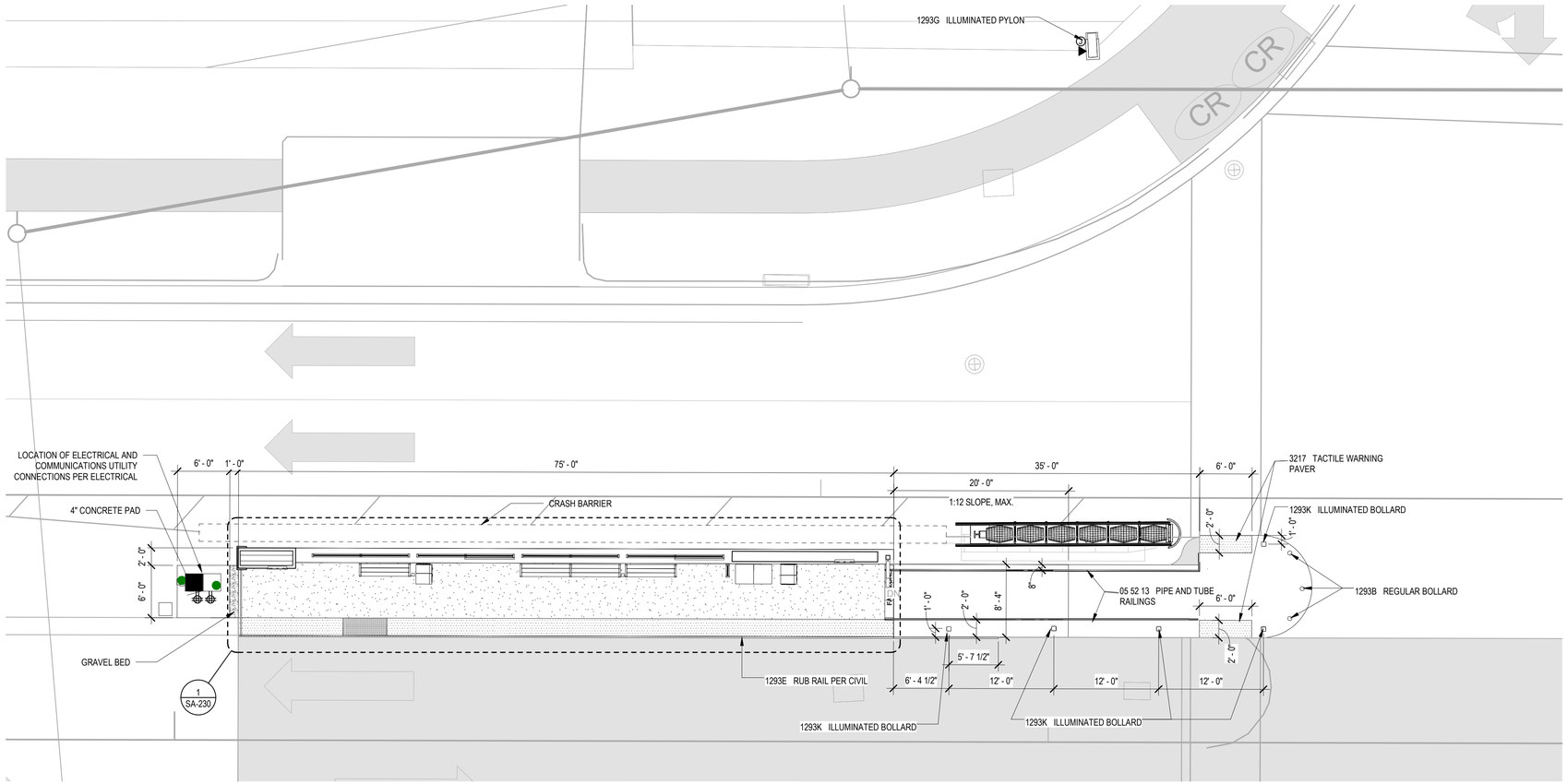

1 SA-140 **RALEIGH BLVD - INBOUND**

SCALE: 1/8" = 1'-0"

GENERAL NOTES

SEE DISCIPLINE SHEETS FOR DISCIPLINE SPECIFIC NOTES

CONSTRUCTION NOTES

1. GC TO COORDINATE WITH VENDORS/INSTALLERS OF OWNER PROVIDED EQUIPMENT, FURNITURE, AND SYSTEMS ITEMS REGARDING DELIVERIES AND SCHEDULES.
2. REFER TO SA-300 SERIES FOR TYPICAL DETAILS AND COORDINATE WITH ELECTRICAL DRAWINGS FOR ADDITIONAL REQUIREMENTS AT BUILT-IN ELEMENTS.
3. TYPICAL DIMENSIONS ARE TO FINISH FACE OF CONSTRUCTION UNLESS OTHERWISE NOTED.
4. ALL RAMPS SHALL NOT EXCEED 1:12 SLOPE, TYP. WALKING SURFACES WITH SLOPES GREATER THAN 1:20 SHALL HAVE RAILINGS PER SA-300 SERIES. REFER TO CIVIL FOR RAMP INFORMATION, TYP.

SPECIALTY EQUIPMENT NOTES

1. REFER TO STATION TYPE SA-200 SERIES FOR EQUIPMENT SCHEDULE INCLUDING BASIS OF DESIGN INFORMATION.
2. ALL SPECIALTY EQUIPMENT SHALL BE INSTALLED PER EQUIPMENT MANUFACTURER'S RECOMMENDATIONS, TYP.

CONSTRUCTION KEYNOTES

A	WALL FINISH MATERIAL VARIES BY STATION, REFER TO SA-300 SERIES FOR TYPICAL DETAILS.
B	BIKE RACK. COORDINATE WITH CITRIX BIKE STATIONS AS REQUIRED.

neighboring concepts
NEIGHBORING CONCEPTS, PLLC
1635 West Trade Street, Suite 1A
Charlotte, North Carolina 28216
NC Cert. No: 51098

INCOMPLETE PLANS
DO NOT USE FOR R/W ACQUISITION

KEYNOTE LEGEND

NUMBER	KEYNOTE
05 52 13	PIPE AND TUBE RAILINGS
1293B	REGULAR BOLLARD
1293E	RUB RAIL PER CIVIL
1293G	ILLUMINATED PYLON
1293K	ILLUMINATED BOLLARD
3217	TACTILE WARNING PAVER

CITY OF RALEIGH
ENGINEERING SERVICES DEPARTMENT

DOCUMENT NOT CONSIDERED FINAL UNLESS ALL SIGNATURES COMPLETED

RALEIGH BLVD INBOUND

PROJECT: WAKE BRT NEW BERN AVE

DATE:	1/28/2022
SHEET BY:	AMK
CHECKED BY:	LAV

REVISIONS

NO.	DATE

SCALES

SA-140

2/1/2022 5:49:07 AM
BIM 360://2020 Wake BRT/2020_Wake BRT_SDD_Arch_Central.rvt

neighboring concepts
NEIGHBORING CONCEPTS, PLLC
1635 West Trade Street, Suite 1A
Charlotte, North Carolina 28216
NC Cert. No: 51098

INCOMPLETE PLANS
DO NOT USE FOR R/W ACQUISITION

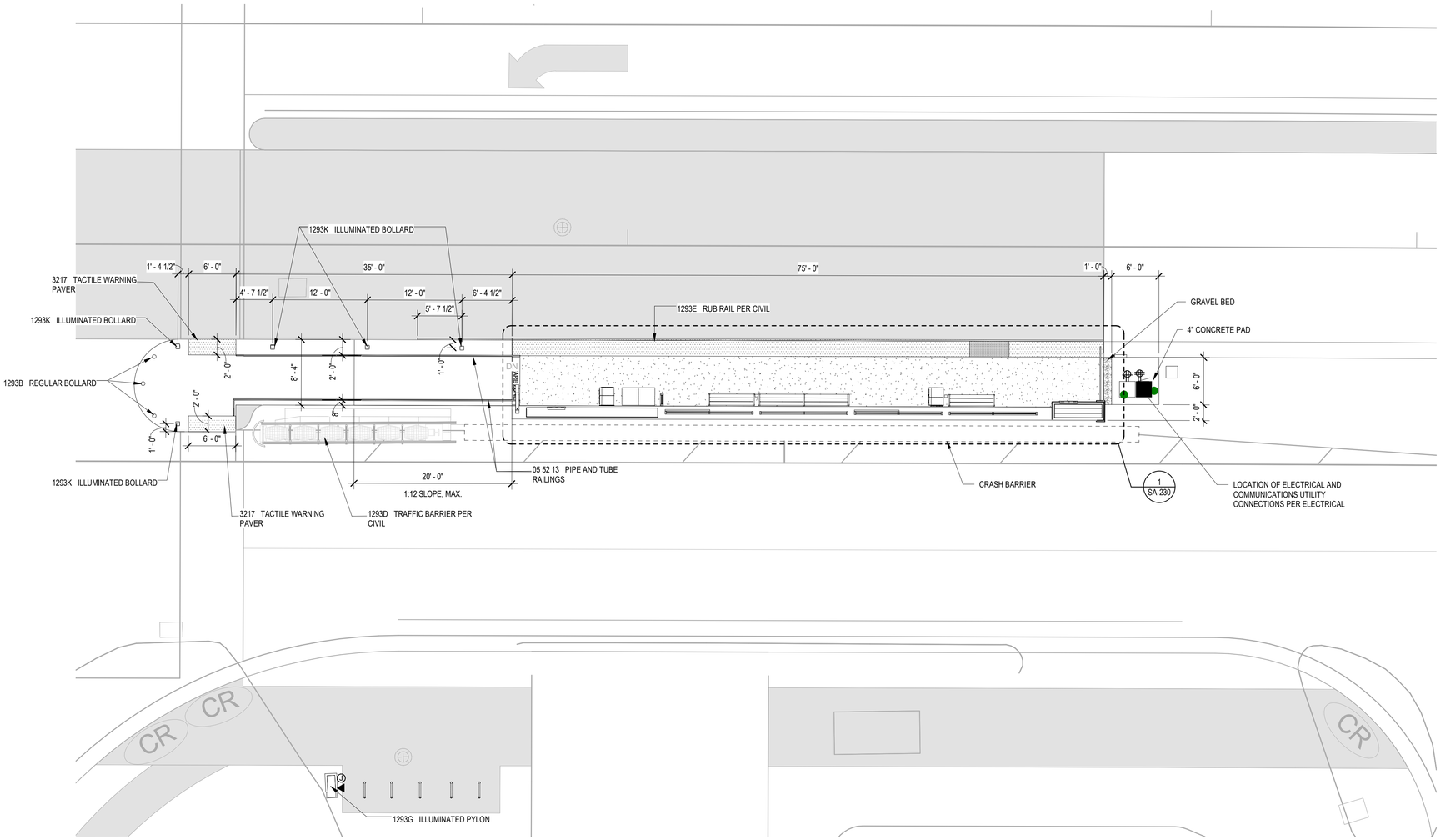

1 SA-141 **RALEIGH BLVD - OUTBOUND**
SCALE: 1/8" = 1'-0"

KEYNOTE LEGEND

NUMBER	KEYNOTE
05 52 13	PIPE AND TUBE RAILINGS
1293B	REGULAR BOLLARD
1293D	TRAFFIC BARRIER PER CIVIL
1293E	RUB RAIL PER CIVIL
1293G	ILLUMINATED PYLON
1293K	ILLUMINATED BOLLARD
3217	TACTILE WARNING PAVER

GENERAL SYMBOL LEGEND

SEE DISCIPLINE SHEETS FOR DISCIPLINE SPECIFIC SYMBOLS

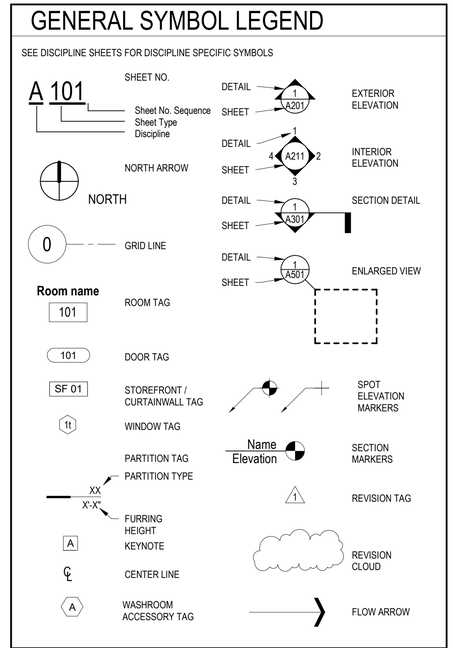

GENERAL NOTES

SEE DISCIPLINE SHEETS FOR DISCIPLINE SPECIFIC NOTES

CONSTRUCTION NOTES
1. GC TO COORDINATE WITH VENDORS/INSTALLERS OF OWNER PROVIDED EQUIPMENT, FURNITURE, AND SYSTEMS ITEMS REGARDING DELIVERIES AND SCHEDULES.
2. REFER TO SA-300 SERIES FOR TYPICAL DETAILS AND COORDINATE WITH ELECTRICAL DRAWINGS FOR ADDITIONAL REQUIREMENTS AT BUILT-IN ELEMENTS.
3. TYPICAL DIMENSIONS ARE TO FINISH FACE OF CONSTRUCTION UNLESS OTHERWISE NOTED.
4. ALL RAMPS SHALL NOT EXCEED 1:12 SLOPE, TYP. WALKING SURFACES WITH SLOPES GREATER THAN 1:20 SHALL HAVE RAILINGS PER SA-300 SERIES. REFER TO CIVIL FOR RAMP INFORMATION, TYP.

SPECIALTY EQUIPMENT NOTES
1. REFER TO STATION TYPE SA-200 SERIES FOR EQUIPMENT SCHEDULE INCLUDING BASIS OF DESIGN INFORMATION.
2. ALL SPECIALTY EQUIPMENT SHALL BE INSTALLED PER EQUIPMENT MANUFACTURER'S RECOMMENDATIONS, TYP.

CONSTRUCTION KEYNOTES

A	WALL FINISH MATERIAL VARIES BY STATION, REFER TO SA-300 SERIES FOR TYPICAL DETAILS.
B	BIKE RACK. COORDINATE WITH CITRIX BIKE STATIONS AS REQUIRED.

CITY OF RALEIGH
ENGINEERING SERVICES DEPARTMENT

DOCUMENT NOT CONSIDERED FINAL UNLESS ALL SIGNATURES COMPLETED

RALEIGH BLVD OUTBOUND

PROJECT:
WAKE BRT
NEW BERN AVE

DATE:	1/28/2022
SHEET BY:	AMK
CHECKED BY:	LAV

REVISIONS

NO.	DATE

SCALES

SA-141

2/1/2022 10:00:19 AM
BIM 360://20047 Wake BRT/20047_Wake BRT_R20_Arch_Central.rvt

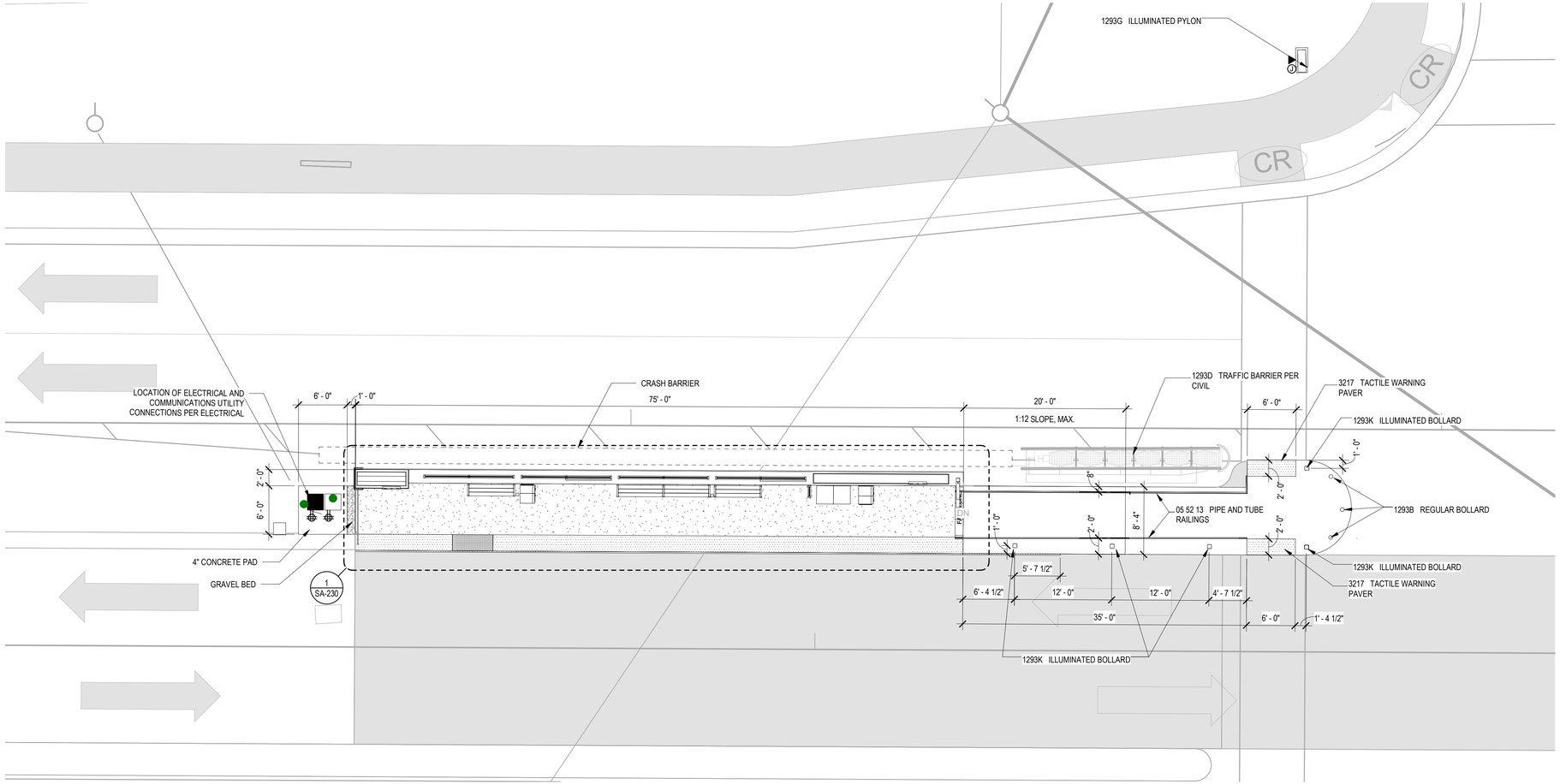

1 SA-150 **KING CHARLES - INBOUND**

SCALE: 1/8" = 1'-0"

GENERAL NOTES

SEE DISCIPLINE SHEETS FOR DISCIPLINE SPECIFIC NOTES

CONSTRUCTION NOTES

1. GC TO COORDINATE WITH VENDORS/INSTALLERS OF OWNER PROVIDED EQUIPMENT, FURNITURE, AND SYSTEMS ITEMS REGARDING DELIVERIES AND SCHEDULES.
2. REFER TO SA-300 SERIES FOR TYPICAL DETAILS AND COORDINATE WITH ELECTRICAL DRAWINGS FOR ADDITIONAL REQUIREMENTS AT BUILT-IN ELEMENTS.
3. TYPICAL DIMENSIONS ARE TO FINISH FACE OF CONSTRUCTION UNLESS OTHERWISE NOTED.
4. ALL RAMPS SHALL NOT EXCEED 1:12 SLOPE, TYP. WALKING SURFACES WITH SLOPES GREATER THAN 1:20 SHALL HAVE RAILINGS PER SA-300 SERIES. REFER TO CIVIL FOR RAMP INFORMATION, TYP.

SPECIALTY EQUIPMENT NOTES

1. REFER TO STATION TYPE SA-200 SERIES FOR EQUIPMENT SCHEDULE INCLUDING BASIS OF DESIGN INFORMATION.
2. ALL SPECIALTY EQUIPMENT SHALL BE INSTALLED PER EQUIPMENT MANUFACTURER'S RECOMMENDATIONS, TYP.

CONSTRUCTION KEYNOTES

A	WALL FINISH MATERIAL VARIES BY STATION, REFER TO SA-300 SERIES FOR TYPICAL DETAILS.
B	BIKE RACK. COORDINATE WITH CITRIX BIKE STATIONS AS REQUIRED.

neighboring concepts
NEIGHBORING CONCEPTS, PLLC
1635 West Trade Street, Suite 1A
Charlotte, North Carolina 28216
NC Cert. No: 51098

INCOMPLETE PLANS
DO NOT USE FOR R/W ACQUISITION

KEYNOTE LEGEND

NUMBER	KEYNOTE
05 52 13	PIPE AND TUBE RAILINGS
1293B	REGULAR BOLLARD
1293D	TRAFFIC BARRIER PER CIVIL
1293G	ILLUMINATED PYLON
1293K	ILLUMINATED BOLLARD
3217	TACTILE WARNING PAVER

CITY OF RALEIGH
ENGINEERING SERVICES DEPARTMENT

DOCUMENT NOT CONSIDERED FINAL UNLESS ALL SIGNATURES COMPLETED

KING CHARLES INBOUND

PROJECT:
WAKE BRT
NEW BERN AVE

DATE: 1/28/2022
SHEET BY: AMK
CHECKED BY: LAV

REVISIONS

NO.	DATE

SCALES

SA-150

2/1/2022 10:09:55 AM
BIM 360://2020 Wake BRT/2020_Wake BRT_SD3_Arch_Central.rvt

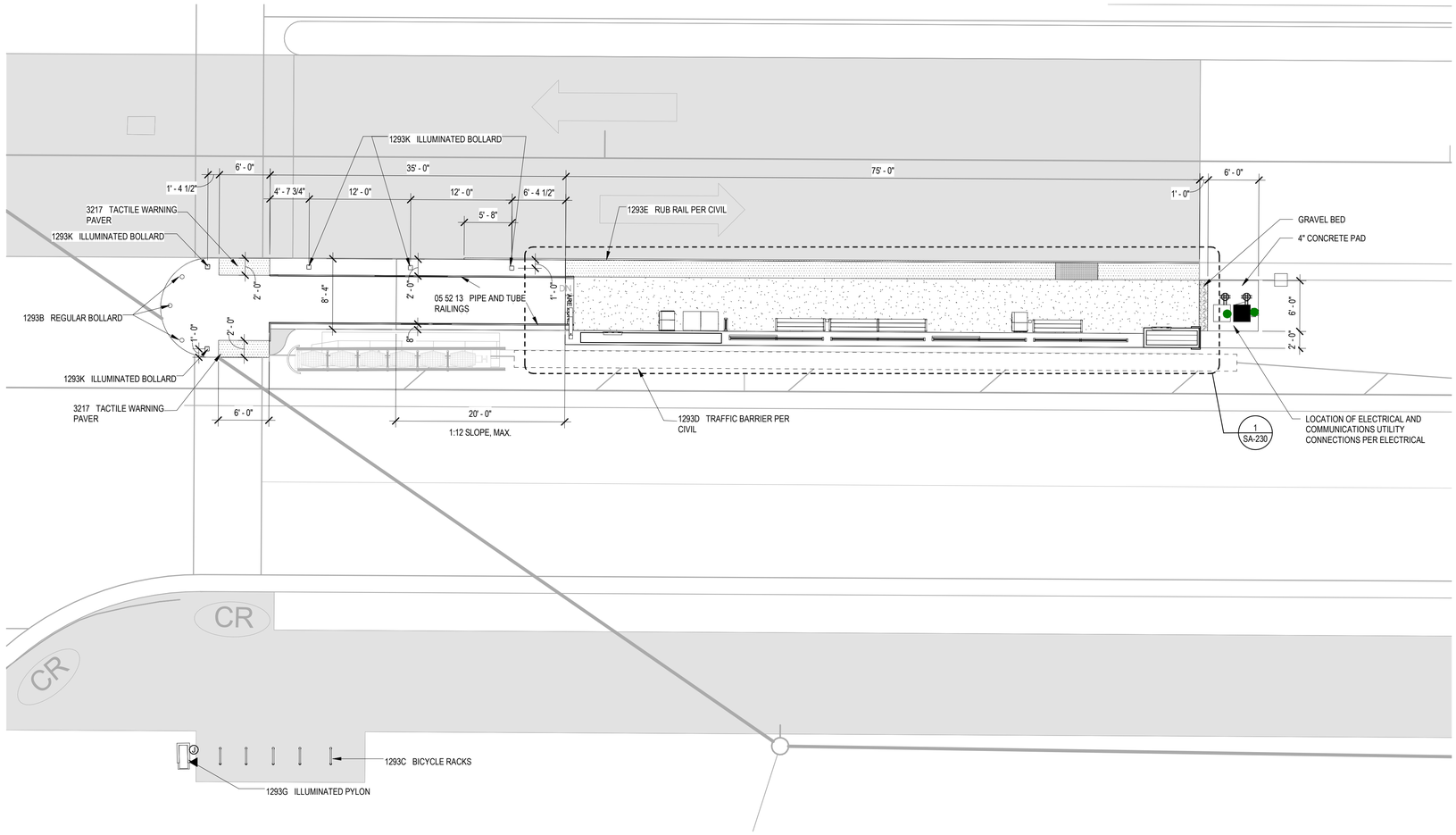

1 SA-151 **KING CHARLES - OUTBOUND**

SCALE: 1/8" = 1'-0"

GENERAL NOTES

SEE DISCIPLINE SHEETS FOR DISCIPLINE SPECIFIC NOTES

CONSTRUCTION NOTES

1. GC TO COORDINATE WITH VENDORS/INSTALLERS OF OWNER PROVIDED EQUIPMENT, FURNITURE, AND SYSTEMS ITEMS REGARDING DELIVERIES AND SCHEDULES.
2. REFER TO SA-300 SERIES FOR TYPICAL DETAILS AND COORDINATE WITH ELECTRICAL DRAWINGS FOR ADDITIONAL REQUIREMENTS AT BUILT-IN ELEMENTS.
3. TYPICAL DIMENSIONS ARE TO FINISH FACE OF CONSTRUCTION UNLESS OTHERWISE NOTED.
4. ALL RAMPS SHALL NOT EXCEED 1:12 SLOPE, TYP. WALKING SURFACES WITH SLOPES GREATER THAN 1:20 SHALL HAVE RAILINGS PER SA-300 SERIES. REFER TO CIVIL FOR RAMP INFORMATION, TYP.

SPECIALTY EQUIPMENT NOTES

1. REFER TO STATION TYPE SA-200 SERIES FOR EQUIPMENT SCHEDULE INCLUDING BASIS OF DESIGN INFORMATION.
2. ALL SPECIALTY EQUIPMENT SHALL BE INSTALLED PER EQUIPMENT MANUFACTURER'S RECOMMENDATIONS, TYP.

CONSTRUCTION KEYNOTES

A	WALL FINISH MATERIAL VARIES BY STATION, REFER TO SA-300 SERIES FOR TYPICAL DETAILS.
B	BIKE RACK. COORDINATE WITH CITRIX BIKE STATIONS AS REQUIRED.

KEYNOTE LEGEND

NUMBER	KEYNOTE
05 52 13	PIPE AND TUBE RAILINGS
1293B	REGULAR BOLLARD
1293C	BICYCLE RACKS
1293D	TRAFFIC BARRIER PER CIVIL
1293E	RUB RAIL PER CIVIL
1293G	ILLUMINATED PYLON
1293K	ILLUMINATED BOLLARD
3217	TACTILE WARNING PAVER

neighboring concepts
NEIGHBORING CONCEPTS, PLLC
1635 West Trade Street, Suite 1A
Charlotte, North Carolina 28216
NC Cert. No: 51098

INCOMPLETE PLANS
DO NOT USE FOR R/W ACQUISITION

CITY OF RALEIGH
ENGINEERING SERVICES
DEPARTMENT

DOCUMENT NOT CONSIDERED FINAL UNLESS ALL SIGNATURES COMPLETED

KING CHARLES OUTBOUND

PROJECT:
WAKE BRT
NEW BERN AVE

DATE:	1/28/2022
SHEET BY:	AMK
CHECKED BY:	LAV

REVISIONS

NO.	DATE

SCALES

SA-151

2/1/2022 10:17:19 AM
\\ral.ad.ci.gov\dfs\Wake BRT\Drw\01_Wake BRT\Drw\01_Wake BRT_R20_Arch_Central.rvt

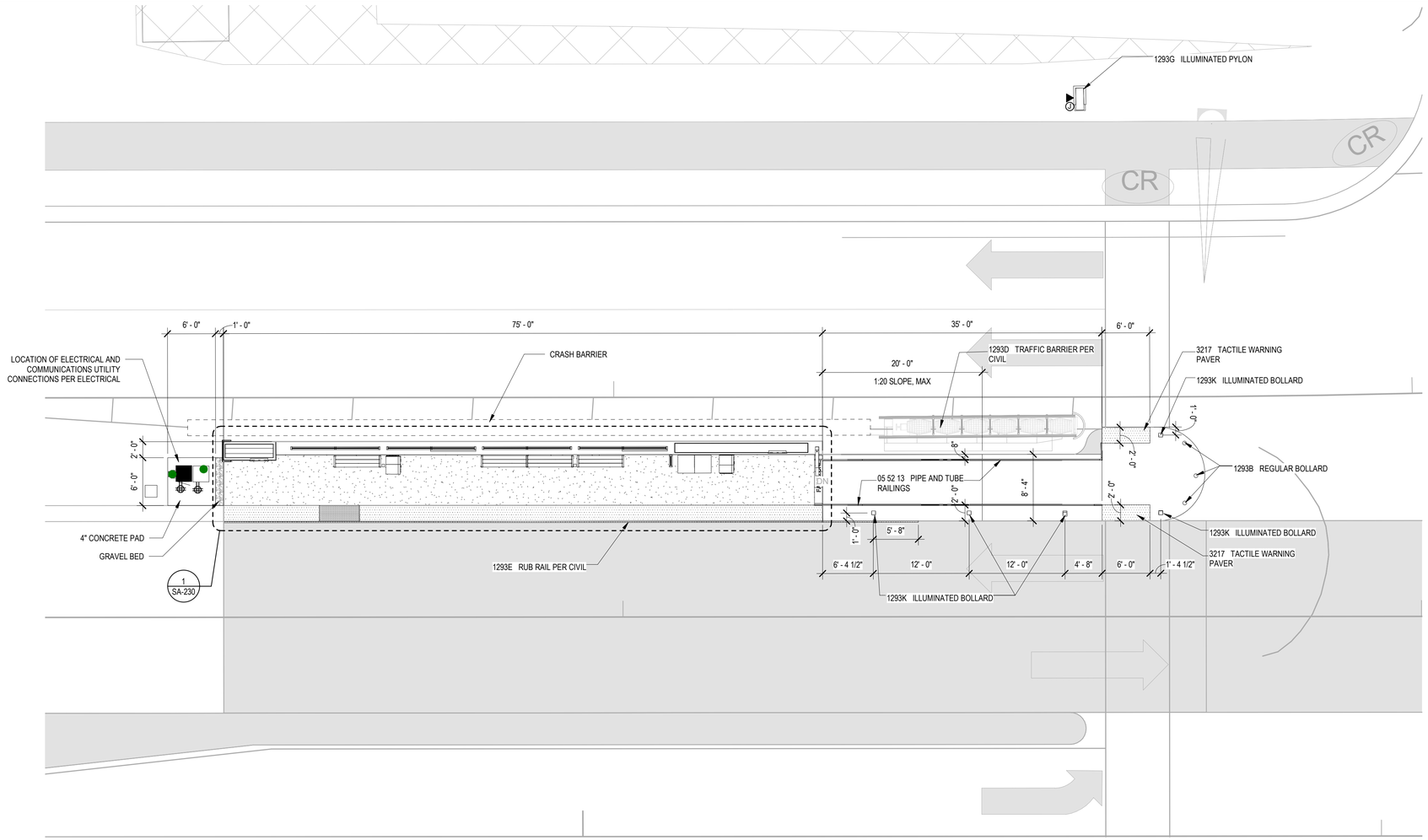

1
SA-160

MEDICAL DISTRICT INBOUND

SCALE: 1/8" = 1'-0"

GENERAL NOTES

SEE DISCIPLINE SHEETS FOR DISCIPLINE SPECIFIC NOTES

CONSTRUCTION NOTES

1. GC TO COORDINATE WITH VENDORS/INSTALLERS OF OWNER PROVIDED EQUIPMENT, FURNITURE, AND SYSTEMS ITEMS REGARDING DELIVERIES AND SCHEDULES.
2. REFER TO SA-300 SERIES FOR TYPICAL DETAILS AND COORDINATE WITH ELECTRICAL DRAWINGS FOR ADDITIONAL REQUIREMENTS AT BUILT-IN ELEMENTS.
3. TYPICAL DIMENSIONS ARE TO FINISH FACE OF CONSTRUCTION UNLESS OTHERWISE NOTED.
4. ALL RAMPS SHALL NOT EXCEED 1:12 SLOPE, TYP. WALKING SURFACES WITH SLOPES GREATER THAN 1:20 SHALL HAVE RAILINGS PER SA-300 SERIES. REFER TO CIVIL FOR RAMP INFORMATION, TYP.

SPECIALTY EQUIPMENT NOTES

1. REFER TO STATION TYPE SA-200 SERIES FOR EQUIPMENT SCHEDULE INCLUDING BASIS OF DESIGN INFORMATION.
2. ALL SPECIALTY EQUIPMENT SHALL BE INSTALLED PER EQUIPMENT MANUFACTURER'S RECOMMENDATIONS, TYP.

CONSTRUCTION KEYNOTES

A	WALL FINISH MATERIAL VARIES BY STATION, REFER TO SA-300 SERIES FOR TYPICAL DETAILS.
B	BIKE RACK. COORDINATE WITH CITRIX BIKE STATIONS AS REQUIRED.

neighboring concepts
NEIGHBORING CONCEPTS, PLLC
1635 West Trade Street, Suite 1A
Charlotte, North Carolina 28216
NC Cert. No: 51098

INCOMPLETE PLANS
DO NOT USE FOR R/W ACQUISITION

KEYNOTE LEGEND

NUMBER	KEYNOTE
05 52 13	PIPE AND TUBE RAILINGS
1293B	REGULAR BOLLARD
1293D	TRAFFIC BARRIER PER CIVIL
1293E	RUB RAIL PER CIVIL
1293G	ILLUMINATED PYLON
1293K	ILLUMINATED BOLLARD
3217	TACTILE WARNING PAVER

CITY OF RALEIGH
ENGINEERING SERVICES DEPARTMENT

DOCUMENT NOT CONSIDERED FINAL UNLESS ALL SIGNATURES COMPLETED

MEDICAL DISTRICT INBOUND

PROJECT:
WAKE BRT
NEW BERN AVE

DATE:	1/28/2022
SHEET BY:	AMK
CHECKED BY:	LAV

REVISIONS

NO.	DATE

SCALES

SA-160

2/1/2022 10:23:58 AM
BIM 360://2020 Wake BRT/2020_Wake BRT_SD3_Arch_Central.rvt

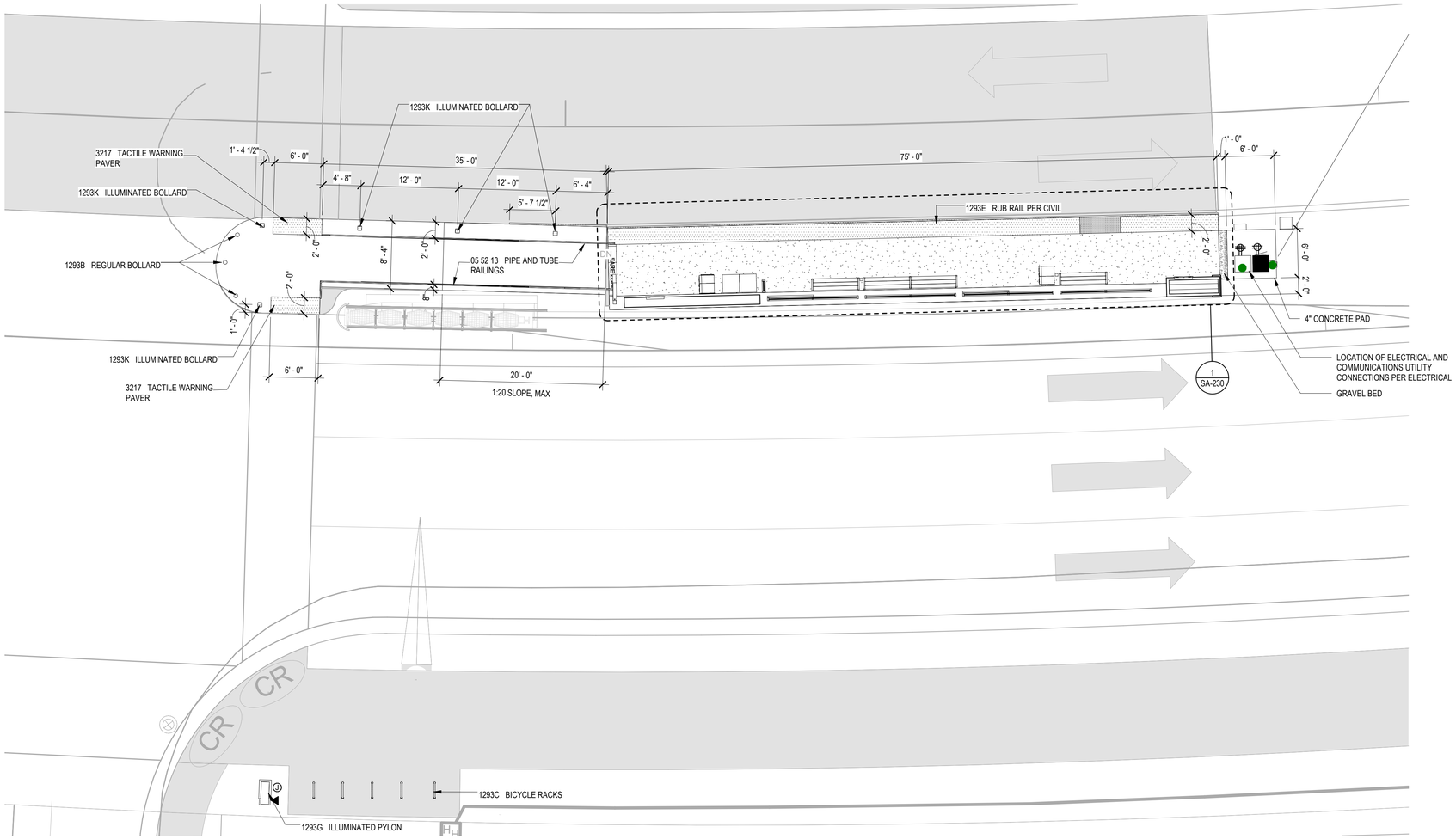

1 SA-161

MEDICAL DISTRICT OUTBOUND

SCALE: 1/8" = 1'-0"

neighboring concepts
NEIGHBORING CONCEPTS, PLLC
1635 West Trade Street, Suite 1A
Charlotte, North Carolina 28216
NC Cert. No: 51098

INCOMPLETE PLANS
DO NOT USE FOR R/W ACQUISITION

KEYNOTE LEGEND

NUMBER	KEYNOTE
05 52 13	PIPE AND TUBE RAILINGS
1293B	REGULAR BOLLARD
1293C	BICYCLE RACKS
1293E	RUB RAIL PER CIVIL
1293G	ILLUMINATED PYLON
1293K	ILLUMINATED BOLLARD
3217	TACTILE WARNING PAVER

GENERAL NOTES

SEE DISCIPLINE SHEETS FOR DISCIPLINE SPECIFIC NOTES

CONSTRUCTION NOTES

1. GC TO COORDINATE WITH VENDORS/INSTALLERS OF OWNER PROVIDED EQUIPMENT, FURNITURE, AND SYSTEMS ITEMS REGARDING DELIVERIES AND SCHEDULES.
2. REFER TO SA-300 SERIES FOR TYPICAL DETAILS AND COORDINATE WITH ELECTRICAL DRAWINGS FOR ADDITIONAL REQUIREMENTS AT BUILT-IN ELEMENTS.
3. TYPICAL DIMENSIONS ARE TO FINISH FACE OF CONSTRUCTION UNLESS OTHERWISE NOTED.
4. ALL RAMPS SHALL NOT EXCEED 1:12 SLOPE, TYP. WALKING SURFACES WITH SLOPES GREATER THAN 1:20 SHALL HAVE RAILINGS PER SA-300 SERIES. REFER TO CIVIL FOR RAMP INFORMATION, TYP.

SPECIALTY EQUIPMENT NOTES

1. REFER TO STATION TYPE SA-200 SERIES FOR EQUIPMENT SCHEDULE INCLUDING BASIS OF DESIGN INFORMATION.
2. ALL SPECIALTY EQUIPMENT SHALL BE INSTALLED PER EQUIPMENT MANUFACTURER'S RECOMMENDATIONS, TYP.

CONSTRUCTION KEYNOTES

A	WALL FINISH MATERIAL VARIES BY STATION, REFER TO SA-300 SERIES FOR TYPICAL DETAILS.
B	BIKE RACK. COORDINATE WITH CITRIX BIKE STATIONS AS REQUIRED.

CITY OF RALEIGH
ENGINEERING SERVICES DEPARTMENT

DOCUMENT NOT CONSIDERED FINAL UNLESS ALL SIGNATURES COMPLETED

MEDICAL DISTRICT OUTBOUND

PROJECT:
WAKE BRT
NEW BERN AVE

DATE:	1/28/2022
SHEET BY:	AMK
CHECKED BY:	LAV

REVISIONS

NO.	DATE

SCALES

SA-161

2/1/2022 10:29:45 AM
P:\BRT\000\000\Wake BRT\Drs\007_Wake BRT_R2D_Arch_Central.rvt

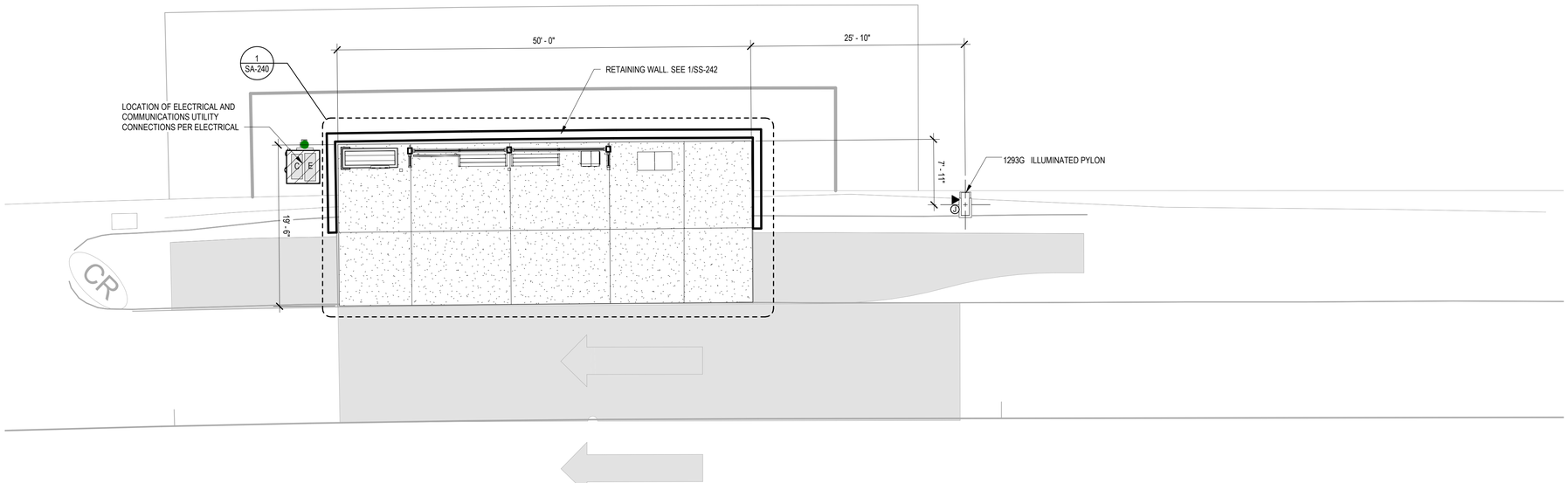

1
SA-170

TRAWICK - INBOUND

SCALE: 1/8" = 1'-0"

neighboring concepts
NEIGHBORING CONCEPTS, PLLC
1635 West Trade Street, Suite 1A
Charlotte, North Carolina 28216
NC Cert. No: 51098

INCOMPLETE PLANS
DO NOT USE FOR R/W ACQUISITION

KEYNOTE LEGEND

NUMBER	KEYNOTE
1293G	ILLUMINATED PYLON

GENERAL NOTES

SEE DISCIPLINE SHEETS FOR DISCIPLINE SPECIFIC NOTES

CONSTRUCTION NOTES

1. GC TO COORDINATE WITH VENDORS/INSTALLERS OF OWNER PROVIDED EQUIPMENT, FURNITURE, AND SYSTEMS ITEMS REGARDING DELIVERIES AND SCHEDULES.
2. REFER TO SA-300 SERIES FOR TYPICAL DETAILS AND COORDINATE WITH ELECTRICAL DRAWINGS FOR ADDITIONAL REQUIREMENTS AT BUILT-IN ELEMENTS.
3. TYPICAL DIMENSIONS ARE TO FINISH FACE OF CONSTRUCTION UNLESS OTHERWISE NOTED.
4. ALL RAMPS SHALL NOT EXCEED 1:12 SLOPE, TYP. WALKING SURFACES WITH SLOPES GREATER THAN 1:20 SHALL HAVE RAILINGS PER SA-300 SERIES. REFER TO CIVIL FOR RAMP INFORMATION, TYP.

SPECIALTY EQUIPMENT NOTES

1. REFER TO STATION TYPE SA-200 SERIES FOR EQUIPMENT SCHEDULE INCLUDING BASIS OF DESIGN INFORMATION.
2. ALL SPECIALTY EQUIPMENT SHALL BE INSTALLED PER EQUIPMENT MANUFACTURER'S RECOMMENDATIONS, TYP.

CONSTRUCTION KEYNOTES

A	WALL FINISH MATERIAL VARIES BY STATION, REFER TO SA-300 SERIES FOR TYPICAL DETAILS.
B	BIKE RACK. COORDINATE WITH CITRIX BIKE STATIONS AS REQUIRED.

CITY OF RALEIGH
ENGINEERING SERVICES DEPARTMENT

DOCUMENT NOT CONSIDERED FINAL UNLESS ALL SIGNATURES COMPLETED

TRAWICK INBOUND

PROJECT: WAKE BRT NEW BERN AVE

DATE:	1/28/2022
SHEET BY:	AMK
CHECKED BY:	LAV

REVISIONS

NO.	DATE

SCALES

SA-170

2/1/2022 10:32:17 AM
BIM360://20-007 Wake BRT/20-007_Wake BRT_R20_Arch_Central.rvt

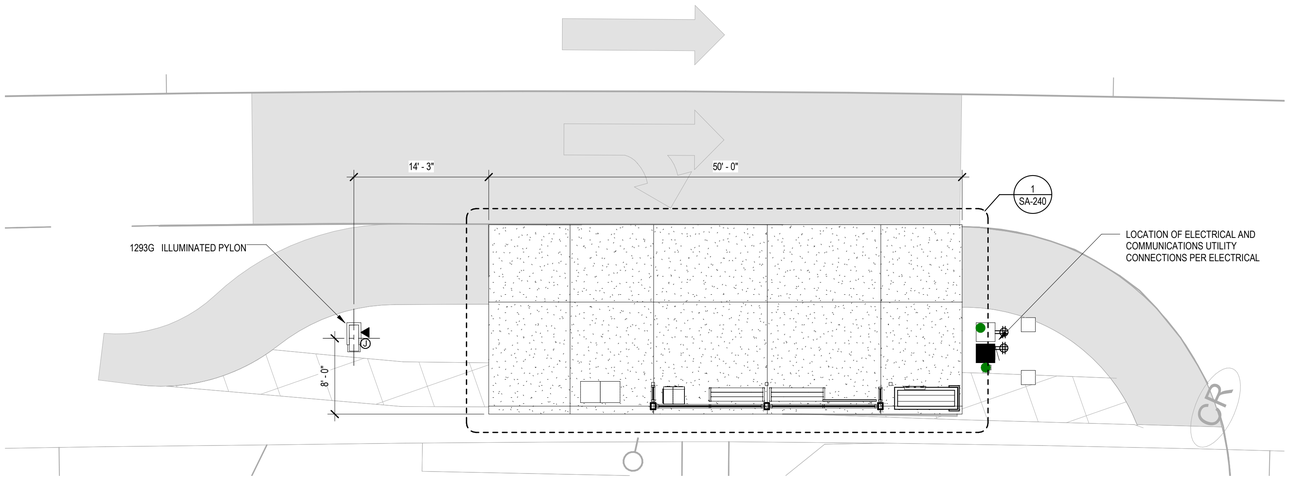

1
SA-171

TRAWICK - OUTBOUND

SCALE: 1/8" = 1'-0"

neighboring concepts

NEIGHBORING CONCEPTS, PLLC
1635 West Trade Street, Suite 1A
Charlotte, North Carolina 28216
NC Cert. No: 51098

INCOMPLETE PLANS
DO NOT USE FOR R/W ACQUISITION

KEYNOTE LEGEND

NUMBER	KEYNOTE
1293G	ILLUMINATED PYLON

GENERAL NOTES

SEE DISCIPLINE SHEETS FOR DISCIPLINE SPECIFIC NOTES

CONSTRUCTION NOTES

1. GC TO COORDINATE WITH VENDORS/INSTALLERS OF OWNER PROVIDED EQUIPMENT, FURNITURE, AND SYSTEMS ITEMS REGARDING DELIVERIES AND SCHEDULES.
2. REFER TO SA-300 SERIES FOR TYPICAL DETAILS AND COORDINATE WITH ELECTRICAL DRAWINGS FOR ADDITIONAL REQUIREMENTS AT BUILT-IN ELEMENTS.
3. TYPICAL DIMENSIONS ARE TO FINISH FACE OF CONSTRUCTION UNLESS OTHERWISE NOTED.
4. ALL RAMPS SHALL NOT EXCEED 1:12 SLOPE, TYP. WALKING SURFACES WITH SLOPES GREATER THAN 1:20 SHALL HAVE RAILINGS PER SA-300 SERIES. REFER TO CIVIL FOR RAMP INFORMATION, TYP.

SPECIALTY EQUIPMENT NOTES

1. REFER TO STATION TYPE SA-200 SERIES FOR EQUIPMENT SCHEDULE INCLUDING BASIS OF DESIGN INFORMATION.
2. ALL SPECIALTY EQUIPMENT SHALL BE INSTALLED PER EQUIPMENT MANUFACTURER'S RECOMMENDATIONS, TYP.

CONSTRUCTION KEYNOTES

A	WALL FINISH MATERIAL VARIES BY STATION, REFER TO SA-300 SERIES FOR TYPICAL DETAILS.
B	BIKE RACK. COORDINATE WITH CITRIX BIKE STATIONS AS REQUIRED.

CITY OF RALEIGH
ENGINEERING SERVICES DEPARTMENT

DOCUMENT NOT CONSIDERED FINAL UNLESS ALL SIGNATURES COMPLETED

TRAWICK OUTBOUND

PROJECT: WAKE BRT NEW BERN AVE

DATE:	1/28/2022
SHEET BY:	AMK
CHECKED BY:	LAV

REVISIONS

NO.	DATE

SCALES

SA-171

2/1/2022 10:33:20 AM
BIM360://20-007 Wake BRT/20-007_Wake BRT_R20_Arch_Central.rvt

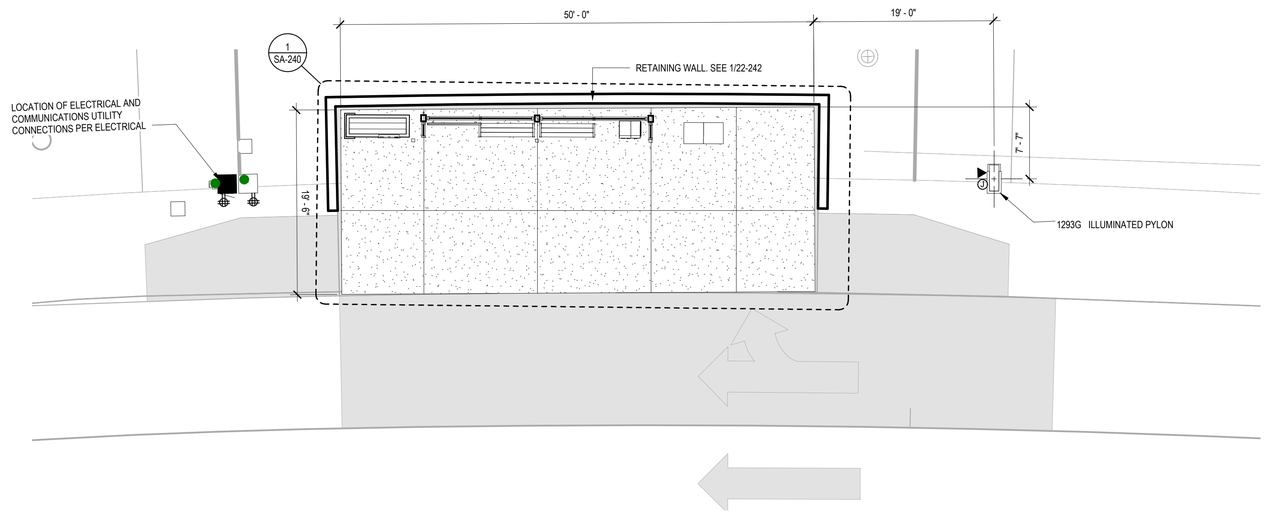

1
SA-180

CORPORATION PARKWAY - INBOUND

SCALE: 1/8" = 1'-0"

neighboring concepts

NEIGHBORING CONCEPTS, PLLC
1635 West Trade Street, Suite 1A
Charlotte, North Carolina 28216
NC Cert. No: 51098

INCOMPLETE PLANS
DO NOT USE FOR R/W ACQUISITION

KEYNOTE LEGEND

NUMBER	KEYNOTE
1293G	ILLUMINATED PYLON

GENERAL NOTES

SEE DISCIPLINE SHEETS FOR DISCIPLINE SPECIFIC NOTES

CONSTRUCTION NOTES

1. GC TO COORDINATE WITH VENDORS/INSTALLERS OF OWNER PROVIDED EQUIPMENT, FURNITURE, AND SYSTEMS ITEMS REGARDING DELIVERIES AND SCHEDULES.
2. REFER TO SA-300 SERIES FOR TYPICAL DETAILS AND COORDINATE WITH ELECTRICAL DRAWINGS FOR ADDITIONAL REQUIREMENTS AT BUILT-IN ELEMENTS.
3. TYPICAL DIMENSIONS ARE TO FINISH FACE OF CONSTRUCTION UNLESS OTHERWISE NOTED.
4. ALL RAMPS SHALL NOT EXCEED 1:12 SLOPE, TYP. WALKING SURFACES WITH SLOPES GREATER THAN 1:20 SHALL HAVE RAILINGS PER SA-300 SERIES. REFER TO CIVIL FOR RAMP INFORMATION, TYP.

SPECIALTY EQUIPMENT NOTES

1. REFER TO STATION TYPE SA-200 SERIES FOR EQUIPMENT SCHEDULE INCLUDING BASIS OF DESIGN INFORMATION.
2. ALL SPECIALTY EQUIPMENT SHALL BE INSTALLED PER EQUIPMENT MANUFACTURER'S RECOMMENDATIONS, TYP.

CONSTRUCTION KEYNOTES

A	WALL FINISH MATERIAL VARIES BY STATION, REFER TO SA-300 SERIES FOR TYPICAL DETAILS.
B	BIKE RACK. COORDINATE WITH CITRIX BIKE STATIONS AS REQUIRED.

CITY OF RALEIGH
ENGINEERING SERVICES DEPARTMENT

DOCUMENT NOT CONSIDERED FINAL UNLESS ALL SIGNATURES COMPLETED

CORPORATION PARKWAY INBOUND

PROJECT: WAKE BRT NEW BERN AVE

DATE:	1/28/2022
SHEET BY:	AMK
CHECKED BY:	LAV

REVISIONS

NO.	DATE

SCALES

SA-180

2/1/2022 10:34:09 AM
BIM360://20-007 Wake BRT/20-007_Wake BRT_R20_Arch_Central.rvt

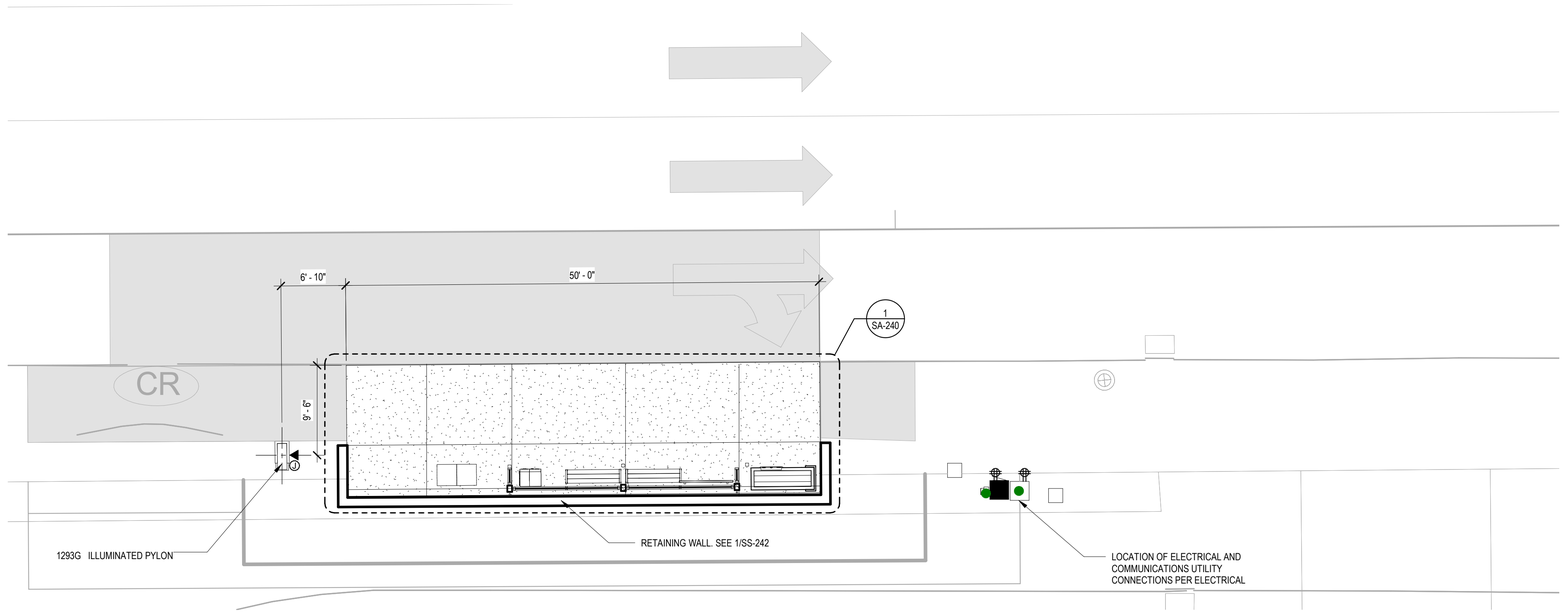

1
SA-181

CORPORATION PARKWAY - OUTBOUND

SCALE: 1/8" = 1'-0"

neighboring concepts

NEIGHBORING CONCEPTS, PLLC
1635 West Trade Street, Suite 1A
Charlotte, North Carolina 28216
NC Cert. No: 51098

INCOMPLETE PLANS
DO NOT USE FOR R/W ACQUISITION

KEYNOTE LEGEND

NUMBER	KEYNOTE
1293G	ILLUMINATED PYLON

GENERAL NOTES

SEE DISCIPLINE SHEETS FOR DISCIPLINE SPECIFIC NOTES

CONSTRUCTION NOTES

1. GC TO COORDINATE WITH VENDORS/INSTALLERS OF OWNER PROVIDED EQUIPMENT, FURNITURE, AND SYSTEMS ITEMS REGARDING DELIVERIES AND SCHEDULES.
2. REFER TO SA-300 SERIES FOR TYPICAL DETAILS AND COORDINATE WITH ELECTRICAL DRAWINGS FOR ADDITIONAL REQUIREMENTS AT BUILT-IN ELEMENTS.
3. TYPICAL DIMENSIONS ARE TO FINISH FACE OF CONSTRUCTION UNLESS OTHERWISE NOTED.
4. ALL RAMPS SHALL NOT EXCEED 1:12 SLOPE, TYP. WALKING SURFACES WITH SLOPES GREATER THAN 1:20 SHALL HAVE RAILINGS PER SA-300 SERIES. REFER TO CIVIL FOR RAMP INFORMATION, TYP.

SPECIALTY EQUIPMENT NOTES

1. REFER TO STATION TYPE SA-200 SERIES FOR EQUIPMENT SCHEDULE INCLUDING BASIS OF DESIGN INFORMATION.
2. ALL SPECIALTY EQUIPMENT SHALL BE INSTALLED PER EQUIPMENT MANUFACTURER'S RECOMMENDATIONS, TYP.

CONSTRUCTION KEYNOTES

A	WALL FINISH MATERIAL VARIES BY STATION, REFER TO SA-300 SERIES FOR TYPICAL DETAILS.
B	BIKE RACK. COORDINATE WITH CITRIX BIKE STATIONS AS REQUIRED.

CITY OF RALEIGH
ENGINEERING SERVICES DEPARTMENT

DOCUMENT NOT CONSIDERED FINAL UNLESS ALL SIGNATURES COMPLETED

CORPORATION PARKWAY OUTBOUND

PROJECT: WAKE BRT NEW BERN AVE

DATE:	1/28/2022
SHEET BY:	AMK
CHECKED BY:	LAV

REVISIONS

NO.	DATE

SCALES

SA-181

2/1/2022 10:35:54 AM
BIM360://20-007 Wake BRT/20-007_Wake BRT_R20_Arch_Central.rvt

neighboring concepts
NEIGHBORING CONCEPTS, PLLC
1635 West Trade Street, Suite 1A
Charlotte, North Carolina 28216
NC Cert. No: 51098

INCOMPLETE PLANS
DO NOT USE FOR R/W ACQUISITION

KEYNOTE LEGEND

NUMBER	KEYNOTE
05 52 13	PIPE AND TUBE RAILINGS
0330S	CONCRETE RAMP, REFER TO CIVIL AND STRUCTURAL
1293G	ILLUMINATED PYLON

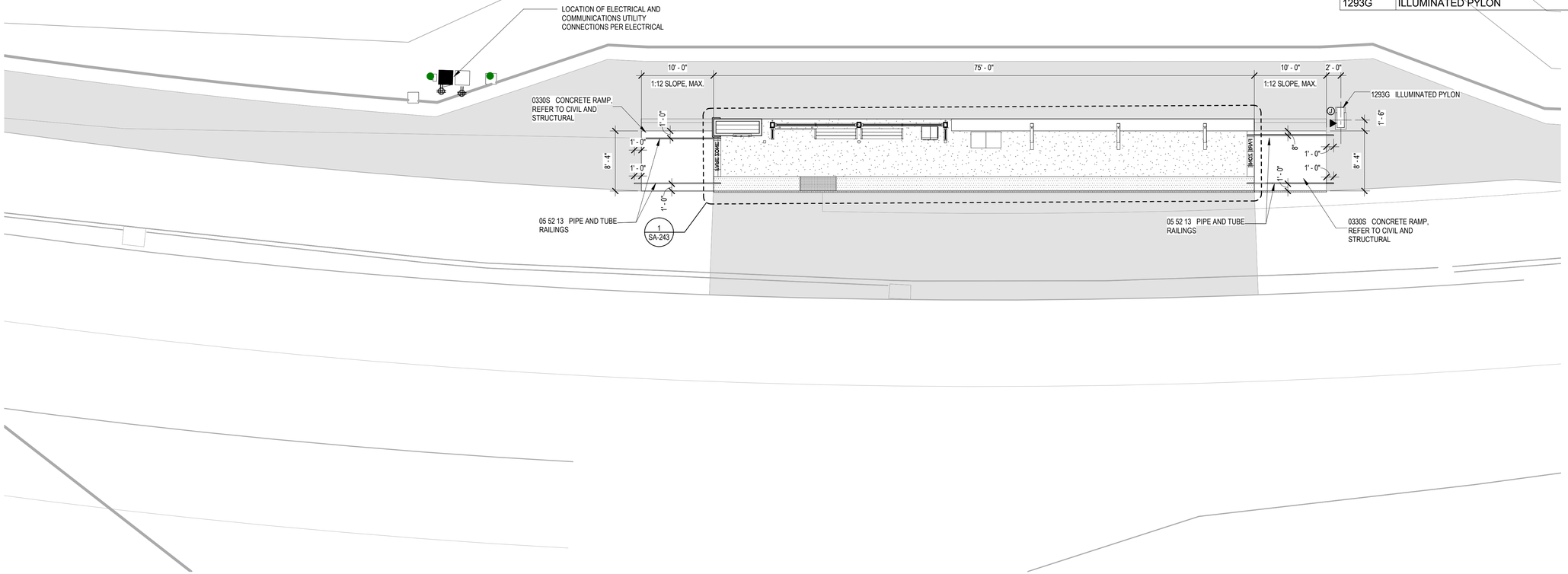

1 SA-190

EAST RALEIGH

SCALE: 1/8" = 1'-0"

GENERAL NOTES

SEE DISCIPLINE SHEETS FOR DISCIPLINE SPECIFIC NOTES

CONSTRUCTION NOTES

1. GC TO COORDINATE WITH VENDORS/INSTALLERS OF OWNER PROVIDED EQUIPMENT, FURNITURE, AND SYSTEMS ITEMS REGARDING DELIVERIES AND SCHEDULES.
2. REFER TO SA-300 SERIES FOR TYPICAL DETAILS AND COORDINATE WITH ELECTRICAL DRAWINGS FOR ADDITIONAL REQUIREMENTS AT BUILT-IN ELEMENTS.
3. TYPICAL DIMENSIONS ARE TO FINISH FACE OF CONSTRUCTION UNLESS OTHERWISE NOTED.
4. ALL RAMPS SHALL NOT EXCEED 1:12 SLOPE, TYP. WALKING SURFACES WITH SLOPES GREATER THAN 1:20 SHALL HAVE RAILINGS PER SA-300 SERIES. REFER TO CIVIL FOR RAMP INFORMATION, TYP.

SPECIALTY EQUIPMENT NOTES

1. REFER TO STATION TYPE SA-200 SERIES FOR EQUIPMENT SCHEDULE INCLUDING BASIS OF DESIGN INFORMATION.
2. ALL SPECIALTY EQUIPMENT SHALL BE INSTALLED PER EQUIPMENT MANUFACTURER'S RECOMMENDATIONS, TYP.

CONSTRUCTION KEYNOTES

A	WALL FINISH MATERIAL VARIES BY STATION, REFER TO SA-300 SERIES FOR TYPICAL DETAILS.
B	BIKE RACK. COORDINATE WITH CITRIX BIKE STATIONS AS REQUIRED.

CITY OF RALEIGH
ENGINEERING SERVICES DEPARTMENT

DOCUMENT NOT CONSIDERED FINAL UNLESS ALL SIGNATURES COMPLETED

EAST RALEIGH

PROJECT:
WAKE BRT
NEW BERN AVE

DATE: 1/28/2022
SHEET BY: AMK
CHECKED BY: LAV

REVISIONS

NO.	DATE

SCALES

SA-190

2/1/2022 10:43:07 AM
S:\BM_PROJ\5400\Wake BRT\Drs\01_Wake BRT2\Arch\01_Wake BRT_R2D_Arch_Central.rvt

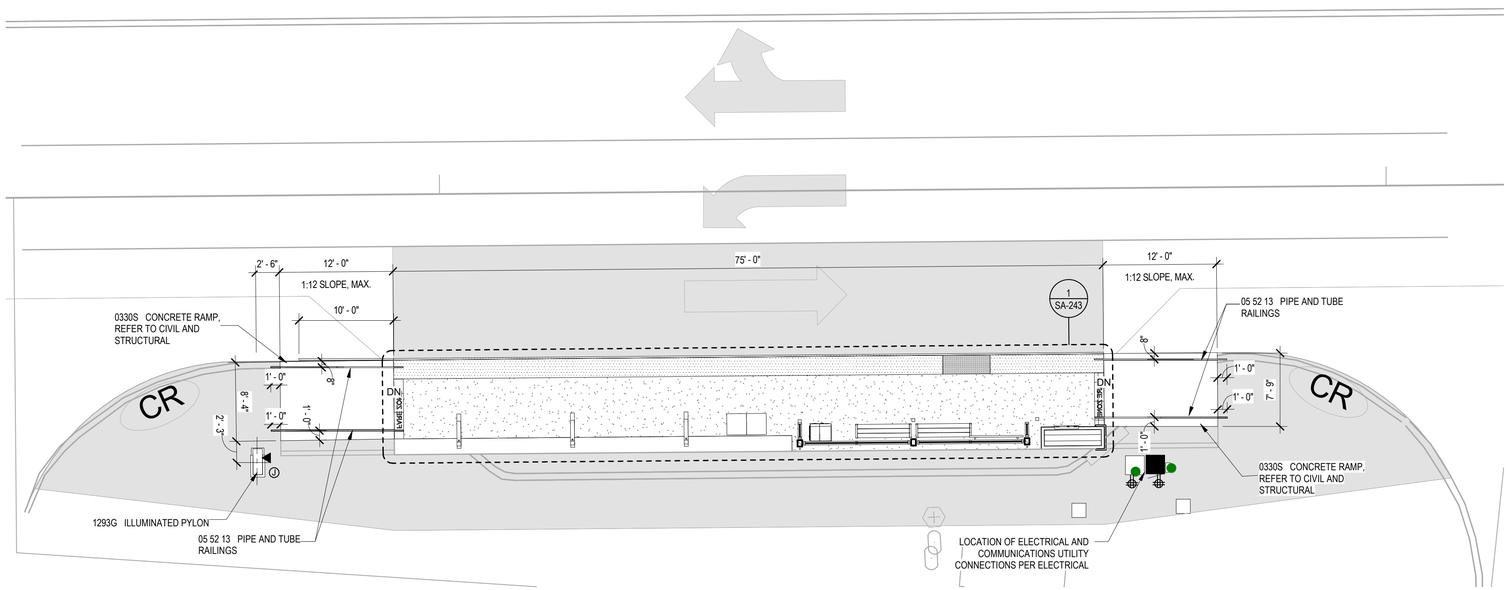

1
SA-191

NEW HOPE ROAD

SCALE: 1/8" = 1'-0"

GENERAL NOTES

SEE DISCIPLINE SHEETS FOR DISCIPLINE SPECIFIC NOTES

CONSTRUCTION NOTES

1. GC TO COORDINATE WITH VENDORS/INSTALLERS OF OWNER PROVIDED EQUIPMENT, FURNITURE, AND SYSTEMS ITEMS REGARDING DELIVERIES AND SCHEDULES.
2. REFER TO SA-300 SERIES FOR TYPICAL DETAILS AND COORDINATE WITH ELECTRICAL DRAWINGS FOR ADDITIONAL REQUIREMENTS AT BUILT-IN ELEMENTS.
3. TYPICAL DIMENSIONS ARE TO FINISH FACE OF CONSTRUCTION UNLESS OTHERWISE NOTED.
4. ALL RAMPS SHALL NOT EXCEED 1:12 SLOPE, TYP. WALKING SURFACES WITH SLOPES GREATER THAN 1:20 SHALL HAVE RAILINGS PER SA-300 SERIES. REFER TO CIVIL FOR RAMP INFORMATION, TYP.

SPECIALTY EQUIPMENT NOTES

1. REFER TO STATION TYPE SA-200 SERIES FOR EQUIPMENT SCHEDULE INCLUDING BASIS OF DESIGN INFORMATION.
2. ALL SPECIALTY EQUIPMENT SHALL BE INSTALLED PER EQUIPMENT MANUFACTURER'S RECOMMENDATIONS, TYP.

CONSTRUCTION KEYNOTES

A	WALL FINISH MATERIAL VARIES BY STATION, REFER TO SA-300 SERIES FOR TYPICAL DETAILS.
B	BIKE RACK. COORDINATE WITH CITRIX BIKE STATIONS AS REQUIRED.

KEYNOTE LEGEND

NUMBER	KEYNOTE
05 52 13	PIPE AND TUBE RAILINGS
0330S	CONCRETE RAMP, REFER TO CIVIL AND STRUCTURAL
1293G	ILLUMINATED PYLON

neighboring concepts
NEIGHBORING CONCEPTS, PLLC
1635 West Trade Street, Suite 1A
Charlotte, North Carolina 28216
NC Cert. No: 51098

INCOMPLETE PLANS
DO NOT USE FOR R/W ACQUISITION

CITY OF RALEIGH
ENGINEERING SERVICES
DEPARTMENT

DOCUMENT NOT CONSIDERED FINAL UNLESS ALL SIGNATURES COMPLETED

NEW HOPE ROAD

PROJECT:
WAKE BRT
NEW BERN AVE

DATE:	1/28/2022
SHEET BY:	AMK
CHECKED BY:	LAV

REVISIONS

NO.	DATE

SCALES

SA-191

2/1/2022 10:49:25 AM
P:\BRT\DESIGN\Wake BRT\Drawings\Wake BRT\SA\007_Wake BRT_R2G_Arch_Central.rvt

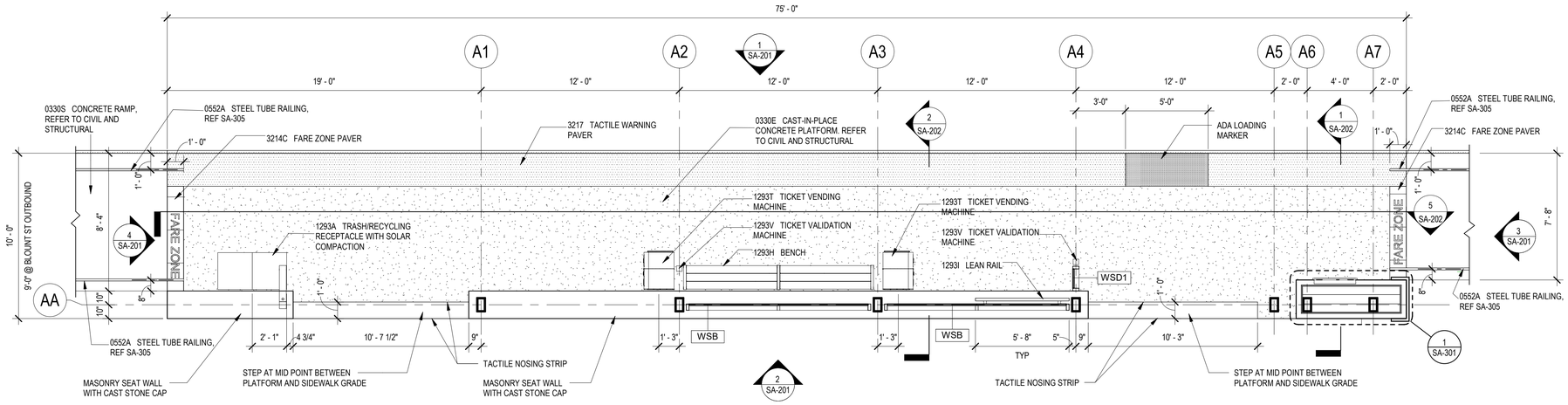

1 SA-200 **URBAN CORE STATION - PLAN**

SCALE: 1/4" = 1'-0"

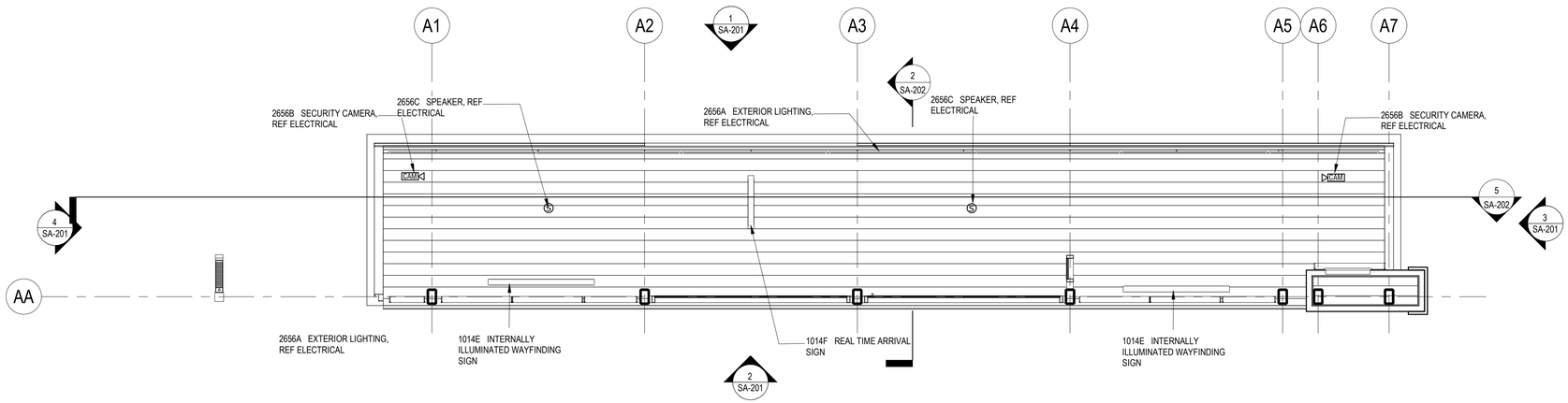

2 SA-200 **URBAN STATION - REFLECTED CEILING PLAN**

SCALE: 1/4" = 1'-0"

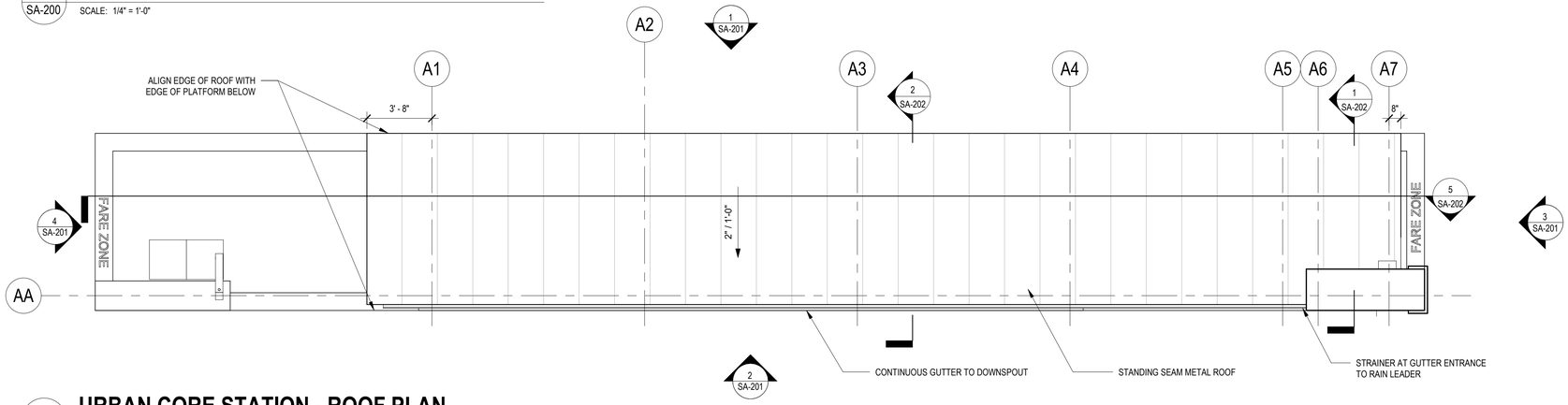

3 SA-200 **URBAN CORE STATION - ROOF PLAN**

SCALE: 1/4" = 1'-0"

neighboring concepts
NEIGHBORING CONCEPTS, PLLC
1635 West Trade Street, Suite 1A
Charlotte, North Carolina 28216
NC Cert. No: 51098

INCOMPLETE PLANS
DO NOT USE FOR R/W ACQUISITION

KEYNOTE LEGEND

NUMBER	KEYNOTE
0330E	CAST-IN-PLACE CONCRETE PLATFORM. REFER TO CIVIL AND STRUCTURAL
0330S	CONCRETE RAMP, REFER TO CIVIL AND STRUCTURAL
0552A	STEEL TUBE RAILING, REF SA-305
1014E	INTERNALLY ILLUMINATED WAYFINDING SIGN
1014F	REAL TIME ARRIVAL SIGN
1293A	TRASH/RECYCLING RECEPTACLE WITH SOLAR COMPACTION
1293H	BENCH
1293I	LEAN RAIL
1293T	TICKET VENDING MACHINE
1293V	TICKET VALIDATION MACHINE
2656A	EXTERIOR LIGHTING, REF ELECTRICAL
2656B	SECURITY CAMERA, REF ELECTRICAL
2656C	SPEAKER, REF ELECTRICAL
3214C	FARE ZONE PAVER
3217	TACTILE WARNING PAVER

STATION ELEMENTS - URBAN CORE

ELEMENT	NUMBER	NOTES
BENCH	4	
WINDSCREEN - PARALLEL	4	
WINDSCREEN - PERPENDICULAR	2	
FARE KIOSKS	2	
TICKET VALIDATORS	2	
PAID FARE ZONE	2	
SOLAR COMPACTING TRASH RECEPTACLE	1	
SOLAR COMPACTING RECYCLING RECEPTACLE	1	
EMERGENCY PHONE	1	
DIGITAL MAP/SIGNAGE	1	
USB CHARGING	2	
REAL TIME ARRIVAL SIGN	1	
SPEAKERS	2	
SPEAKERS	2	

CITY OF RALEIGH
ENGINEERING SERVICES DEPARTMENT

DOCUMENT NOT CONSIDERED FINAL UNLESS ALL SIGNATURES COMPLETED

STATION TYPE A - URBAN CORE

PROJECT: WAKE BRT NEW BERN AVE

DATE:	1/28/2022
SHEET BY:	AMK
CHECKED BY:	LAV

REVISIONS

NO.	DATE

SCALES

SA-200

1/31/2022 5:48:54 PM
BIM 360://2007 Wake BRT/2007_Wake BRT20v007_Wake BRT20v007_Wake BRT_R20_Arch_Central.rvt

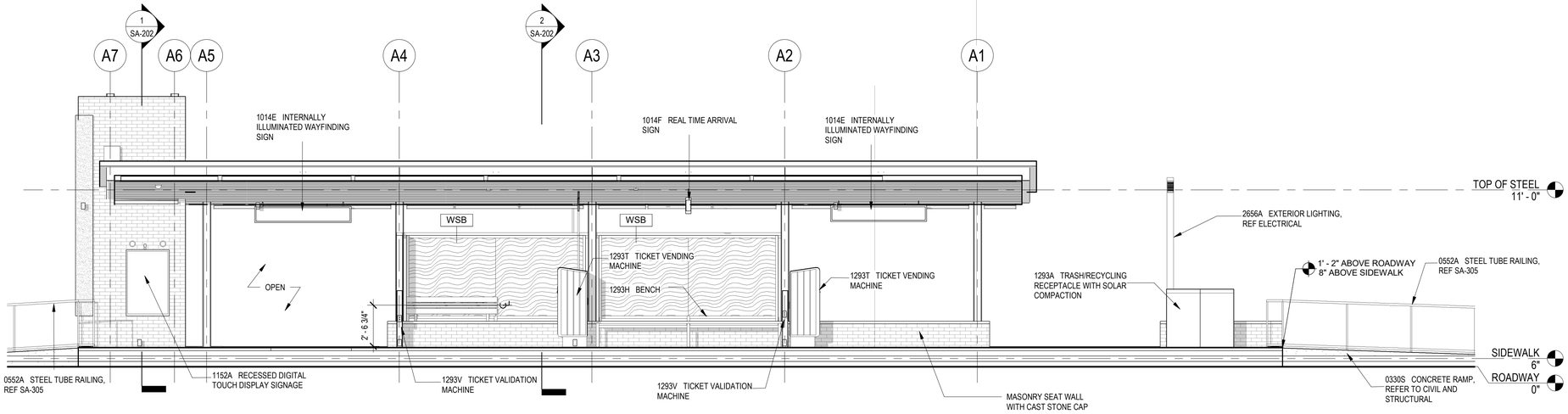

1 SA-201 **URBAN CORE STATION - FRONT ELEVATION**

SCALE: 1/4" = 1'-0"

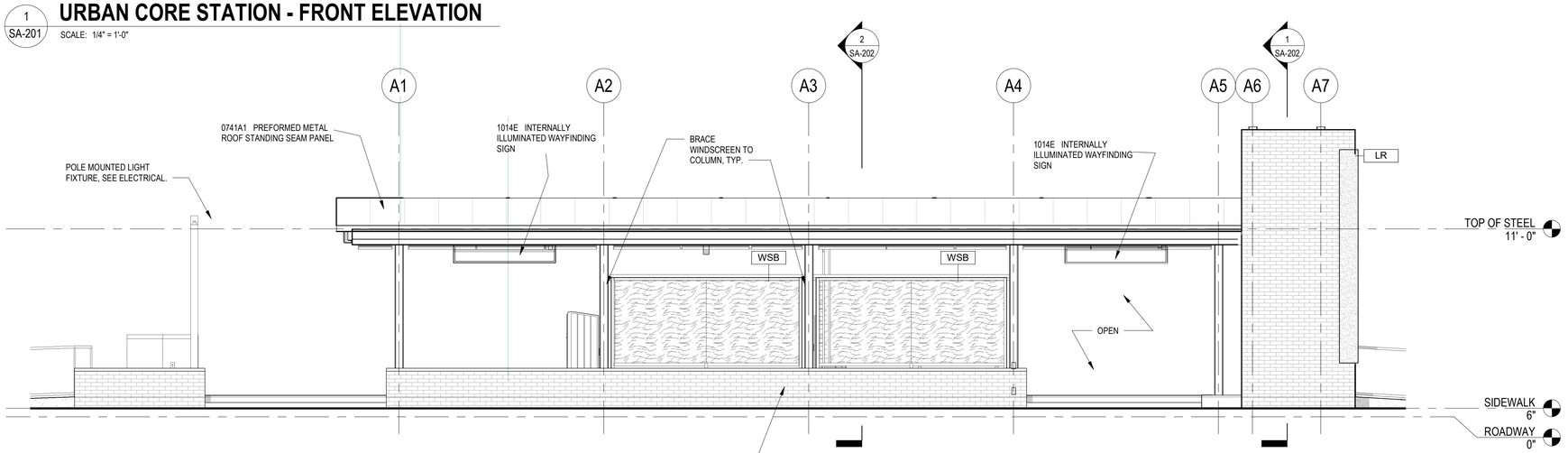

2 SA-201 **URBAN CORE STATION - BACK ELEVATION**

SCALE: 1/4" = 1'-0" R.E. = 1/SA-200

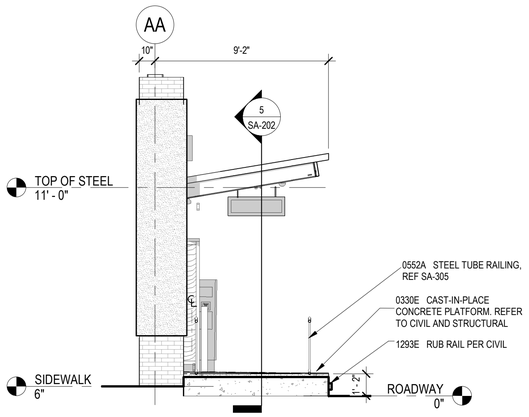

3 SA-201 **URBAN CORE STATION - ELEVATION 4**

SCALE: 1/4" = 1'-0"

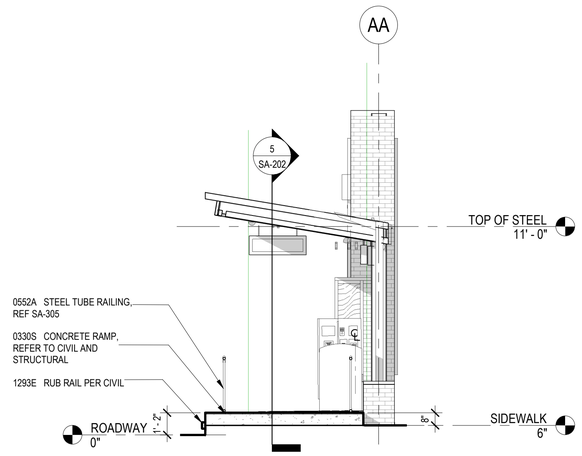

4 SA-201 **URBAN CORE STATION - ELEVATION 3**

SCALE: 1/4" = 1'-0"

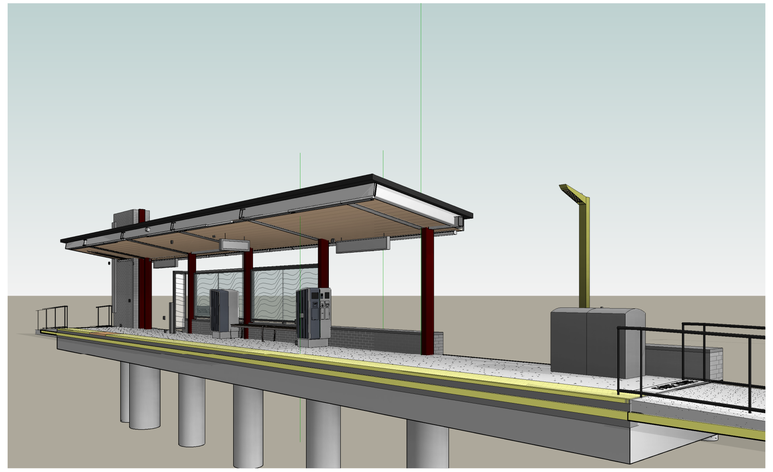

5 SA-201 **URBAN CORE STATION PERSPECTIVE**

NOT TO SCALE

neighboring concepts
NEIGHBORING CONCEPTS, PLLC
1635 West Trade Street, Suite 1A
Charlotte, North Carolina 28216
NC Cert. No: 51098

INCOMPLETE PLANS
DO NOT USE FOR R/W ACQUISITION

KEYNOTE LEGEND

NUMBER	KEYNOTE
0330E	CAST-IN-PLACE CONCRETE PLATFORM. REFER TO CIVIL AND STRUCTURAL
0330S	CONCRETE RAMP, REFER TO CIVIL AND STRUCTURAL
0552A	STEEL TUBE RAILING, REF SA-305
0741A1	PREFORMED METAL ROOF STANDING SEAM PANEL
1014E	INTERNALLY ILLUMINATED WAYFINDING SIGN
1014F	REAL TIME ARRIVAL SIGN
1152A	RECESSED DIGITAL TOUCH DISPLAY SIGNAGE
1293A	TRASH/RECYCLING RECEPTACLE WITH SOLAR COMPACTION
1293E	RUB RAIL PER CIVIL
1293H	BENCH
1293T	TICKET VENDING MACHINE
1293V	TICKET VALIDATION MACHINE
2656A	EXTERIOR LIGHTING, REF ELECTRICAL

CITY OF RALEIGH
ENGINEERING SERVICES DEPARTMENT

DOCUMENT NOT CONSIDERED FINAL UNLESS ALL SIGNATURES COMPLETED

STATION TYPE A - URBAN CORE

PROJECT:
WAKE BRT
NEW BERN AVE

DATE:	1/28/2022
SHEET BY:	AMK
CHECKED BY:	LAV

REVISIONS

NO.	DATE

SCALES

SA-201

1/17/2022 5:47:38 PM
BRT 2800\SD\001 Wake BRT\Dr\001 Wake BRT\Dr\001_Wake BRT_R00_Arch_Central.rvt

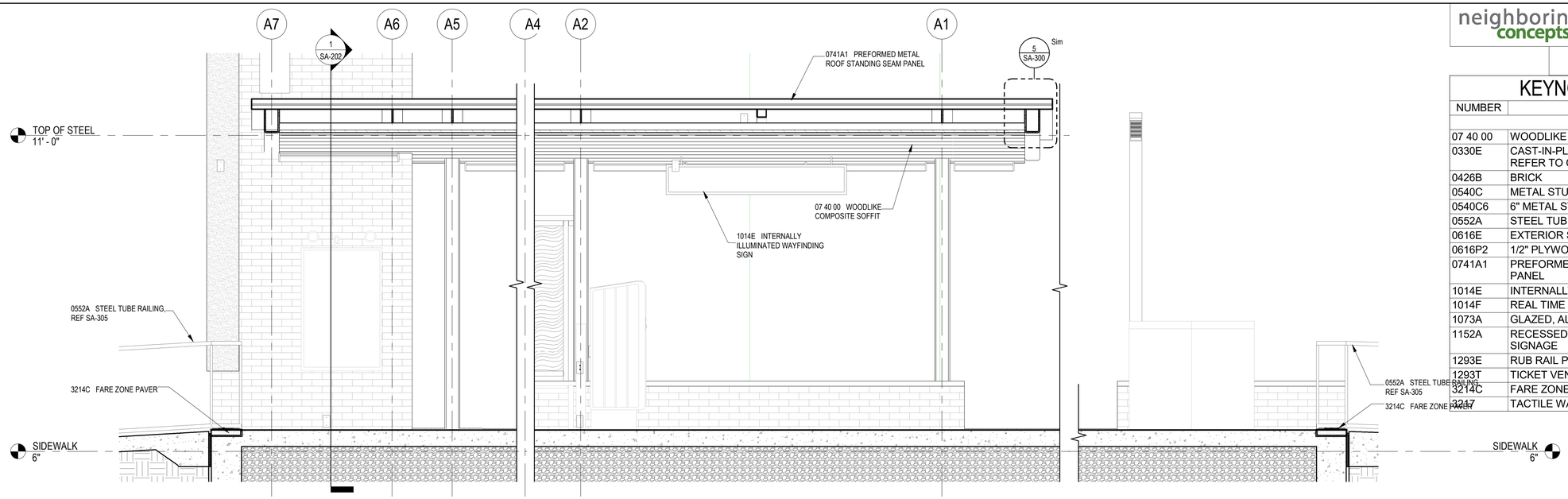

5 SA-202 **TYPICAL CANOPY CROSS SECTION**

SCALE: 1/2" = 1'-0" R.E. = 1/SA-200

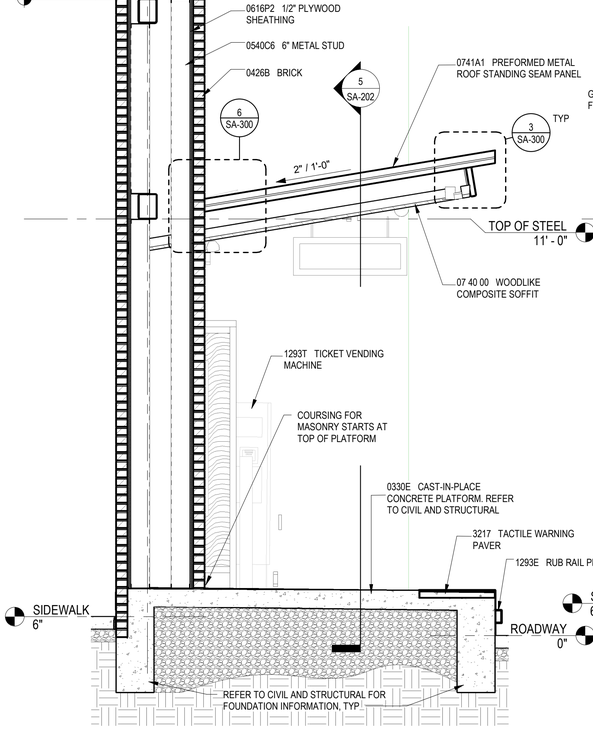

4 SA-202 **TYPICAL CANOPY SECTION AT BE2**

SCALE: 1/2" = 1'-0"

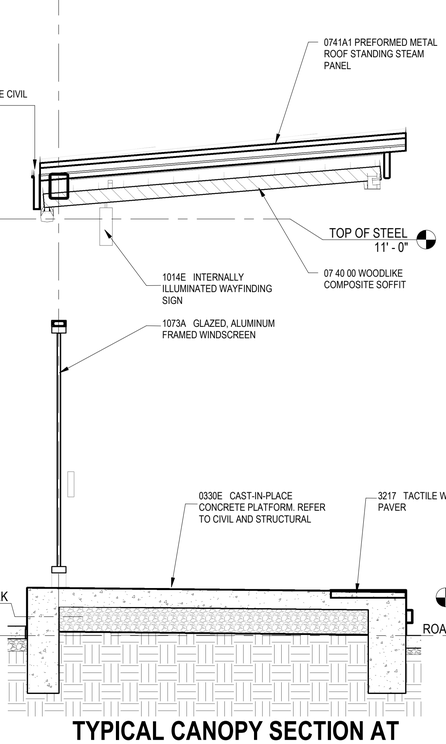

3 SA-202 **TYPICAL CANOPY SECTION AT WINDSCREEN**

SCALE: 1/2" = 1'-0" R.E. = 1/SA-220

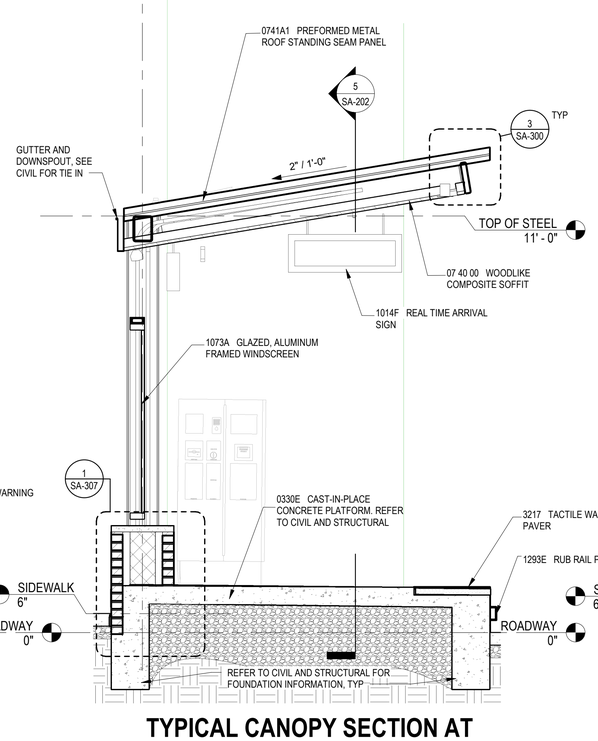

2 SA-202 **TYPICAL CANOPY SECTION AT WINDSCREEN WITH SEAT WALL**

SCALE: 1/2" = 1'-0" R.E. = 1/SA-200

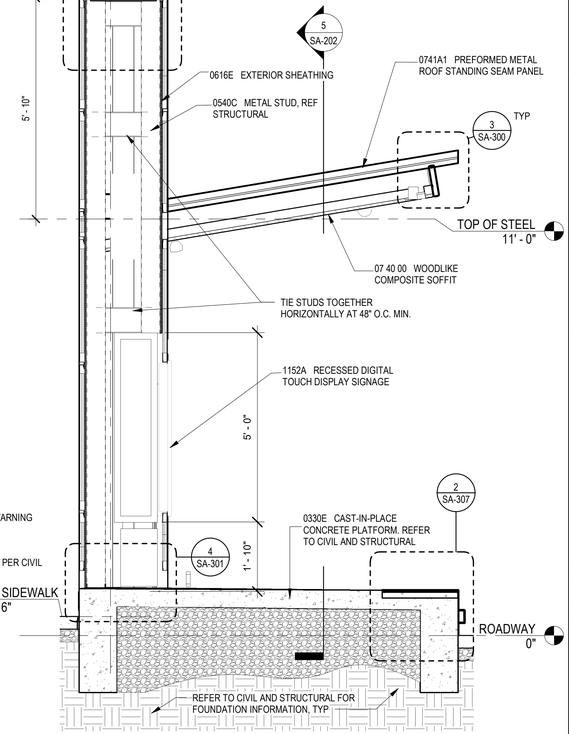

1 SA-202 **TYPICAL CANOPY SECTION AT BE1**

SCALE: 1/2" = 1'-0"

neighboring concepts
NEIGHBORING CONCEPTS, PLLC
1635 West Trade Street, Suite 1A
Charlotte, North Carolina 28216
NC Cert. No: 51098

INCOMPLETE PLANS
DO NOT USE FOR R/W ACQUISITION

KEYNOTE LEGEND

NUMBER	KEYNOTE
07 40 00	WOODLIKE COMPOSITE SOFFIT
0330E	CAST-IN-PLACE CONCRETE PLATFORM. REFER TO CIVIL AND STRUCTURAL
0426B	BRICK
0540C	METAL STUD, REF STRUCTURAL
0540C6	6" METAL STUD
0552A	STEEL TUBE RAILING, REF SA-305
0616E	EXTERIOR SHEATHING
0616P2	1/2" PLYWOOD SHEATHING
0741A1	PREFORMED METAL ROOF STANDING SEAM PANEL
1014E	INTERNALLY ILLUMINATED WAYFINDING SIGN
1014F	REAL TIME ARRIVAL SIGN
1073A	GLAZED, ALUMINUM FRAMED WINDSCREEN
1152A	RECESSED DIGITAL TOUCH DISPLAY SIGNAGE
1293E	RUB RAIL PER CIVIL
1293T	TICKET VENDING MACHINE
3214C	FARE ZONE PAVER
3217	TACTILE WARNING PAVER

CITY OF RALEIGH
ENGINEERING SERVICES DEPARTMENT

DOCUMENT NOT CONSIDERED FINAL UNLESS ALL SIGNATURES COMPLETED

TYPICAL CANOPY SECTIONS

PROJECT:
WAKE BRT
NEW BERN AVE

DATE:	1/28/2022
SHEET BY:	AMK
CHECKED BY:	LAV

REVISIONS

NO.	DATE

SCALES

SA-202

1/31/2022 6:43:10 PM
M:\BRT\DOM\07 Wake BRT\DOM-007_Wake BRT_800_Arch_Central.rvt

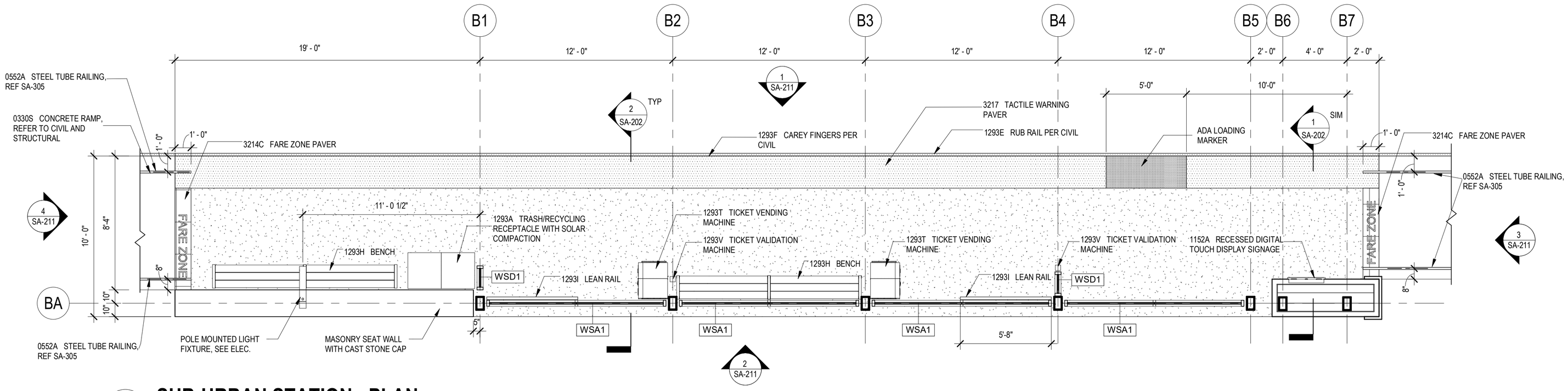

1 SA-210 **SUB-URBAN STATION - PLAN**

SCALE: 1/4" = 1'-0"

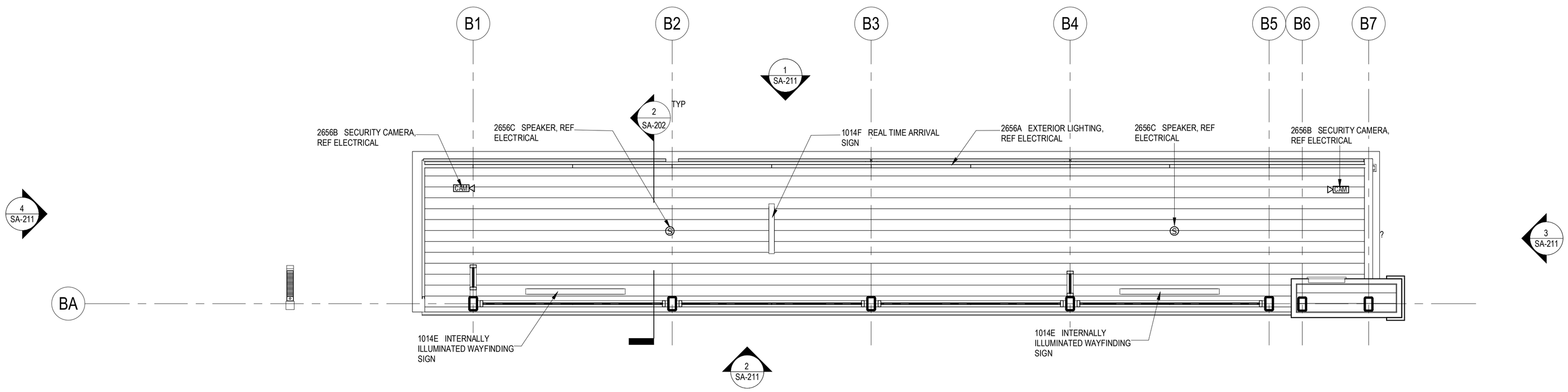

2 SA-210 **SUB-URBAN STATION - REFLECTED CEILING PLAN**

SCALE: 1/4" = 1'-0"

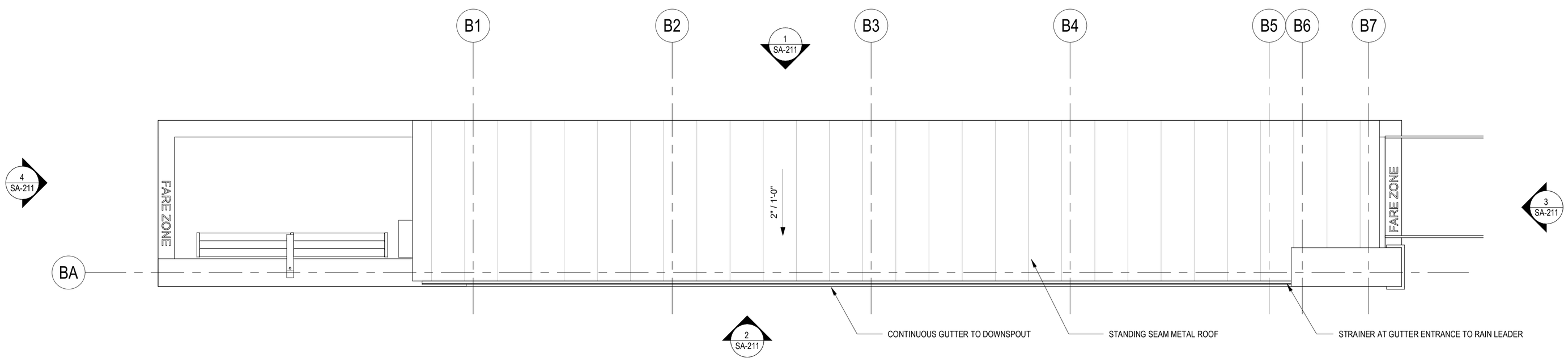

3 SA-210 **SUB-URBAN STATION - ROOF PLAN**

SCALE: 1/4" = 1'-0"

neighboring concepts
NEIGHBORING CONCEPTS, PLLC
1635 West Trade Street, Suite 1A
Charlotte, North Carolina 28216
NC Cert. No: 51098

INCOMPLETE PLANS
DO NOT USE FOR R/W ACQUISITION

KEYNOTE LEGEND

NUMBER	KEYNOTE
0330S	CONCRETE RAMP, REFER TO CIVIL AND STRUCTURAL
0552A	STEEL TUBE RAILING, REF SA-305
1014E	INTERNALLY ILLUMINATED WAYFINDING SIGN
1014F	REAL TIME ARRIVAL SIGN
1152A	RECESSED DIGITAL TOUCH DISPLAY SIGNAGE
1293A	TRASH/RECYCLING RECEPTACLE WITH SOLAR COMPACTION
1293E	RUB RAIL PER CIVIL
1293F	CAREY FINGERS PER CIVIL
1293H	BENCH
1293I	LEAN RAIL
1293T	TICKET VENDING MACHINE
1293V	TICKET VALIDATION MACHINE
2656A	EXTERIOR LIGHTING, REF ELECTRICAL
2656B	SECURITY CAMERA, REF ELECTRICAL
2656C	SPEAKER, REF ELECTRICAL
3214C	FARE ZONE PAVER
3217	TACTILE WARNING PAVER

CITY OF RALEIGH
ENGINEERING SERVICES DEPARTMENT

DOCUMENT NOT CONSIDERED FINAL UNLESS ALL SIGNATURES COMPLETED

STATION TYPE B - SUB-URBAN

PROJECT:
WAKE BRT
NEW BERN AVE

DATE:	1/28/2022
SHEET BY:	AMK
CHECKED BY:	LAV

REVISIONS

NO.	DATE

SCALES

SA-210

1/24/2022 3:27:43 PM
I:\BRT\PDP\Wake BRT\PDP\01_Wake BRT\PDP01_Wake BRT_ROD_Arch_Central.rvt

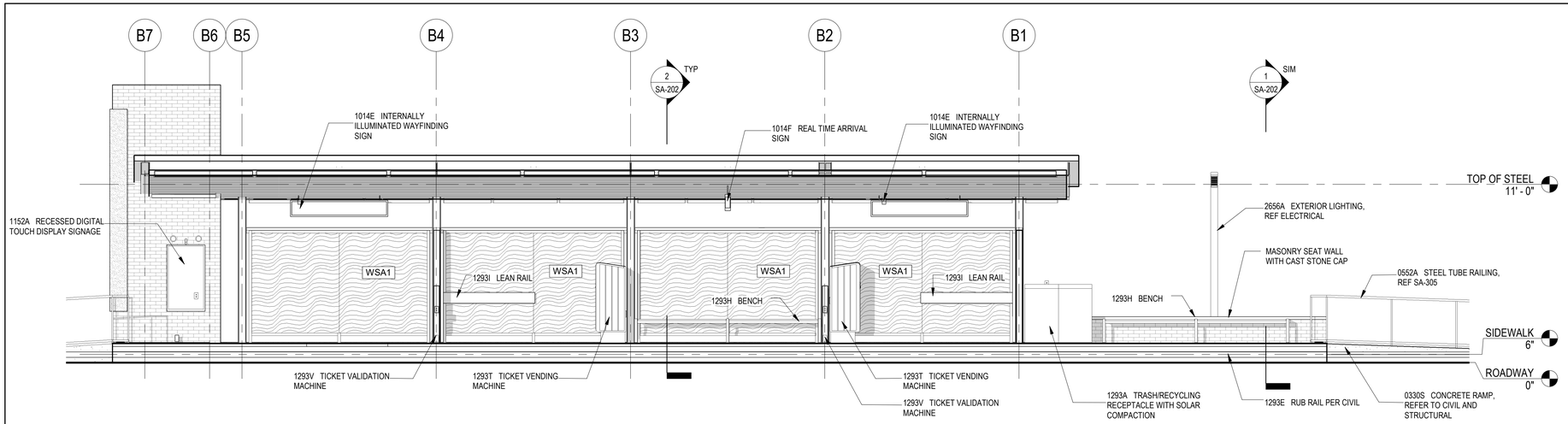

1 SA-211 **SUB-URBAN STATION - FRONT ELEVATION**

SCALE: 1/4" = 1'-0"

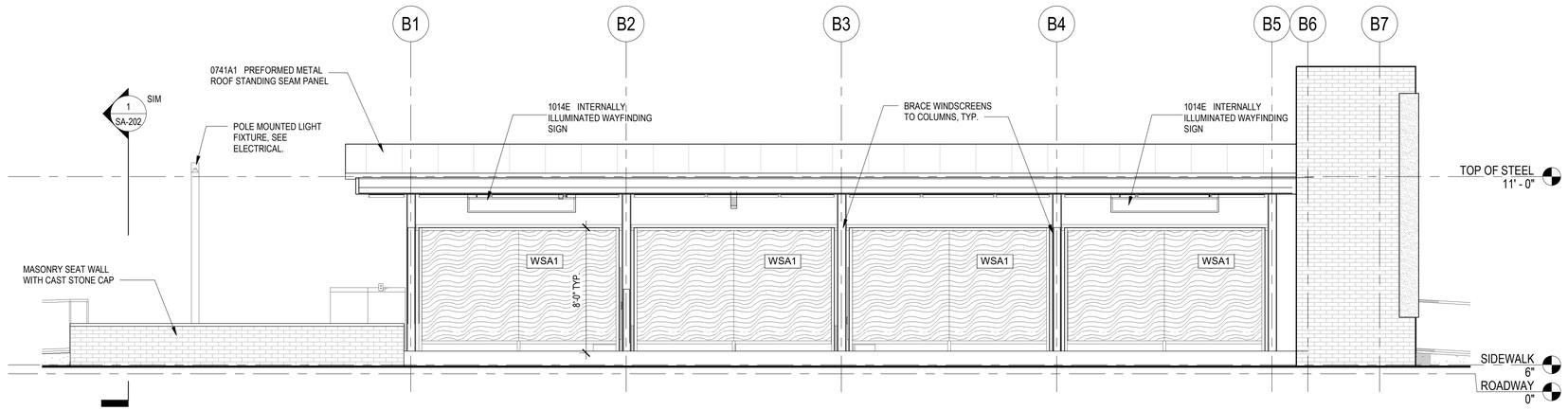

2 SA-211 **SUB-URBAN STATION - BACK ELEVATION**

SCALE: 1/4" = 1'-0"

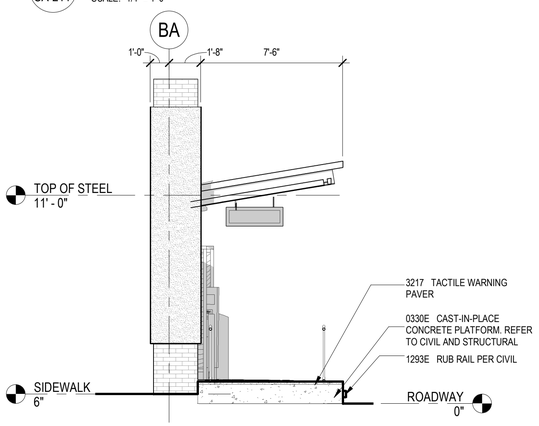

3 SA-211 **SUB-URBAN STATION - ELEVATION 4**

SCALE: 1/4" = 1'-0"

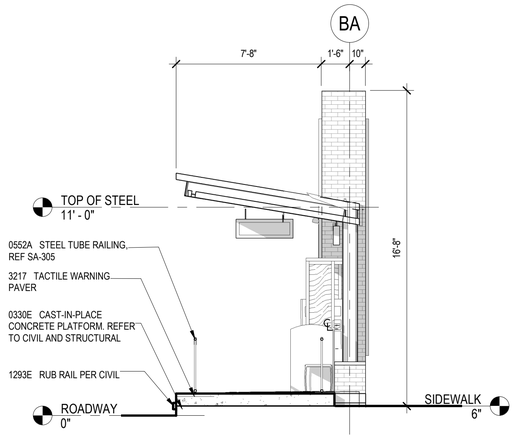

4 SA-211 **SUB-URBAN STATION - ELEVATION 3**

SCALE: 1/4" = 1'-0" R.E. = 1/SA-210

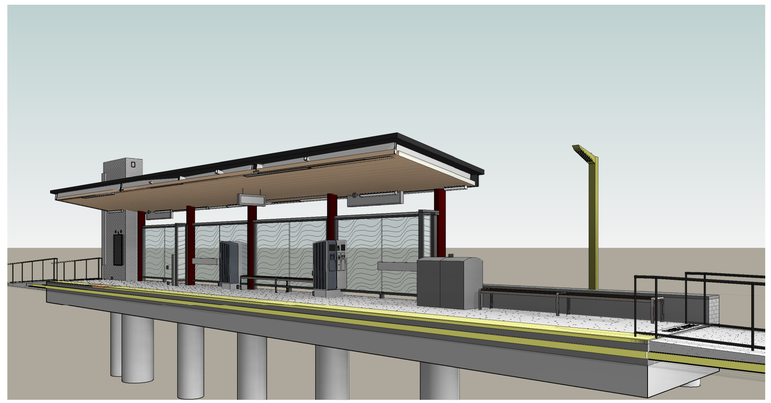

5 SA-211 **SUB-URBAN STATION PERSPECTIVE**

NOT TO SCALE

KEYNOTE LEGEND

NUMBER	KEYNOTE
0330E	CAST-IN-PLACE CONCRETE PLATFORM. REFER TO CIVIL AND STRUCTURAL
0330S	CONCRETE RAMP, REFER TO CIVIL AND STRUCTURAL
0552A	STEEL TUBE RAILING, REF SA-305
0741A1	PREFORMED METAL ROOF STANDING SEAM PANEL
1014E	INTERNALLY ILLUMINATED WAYFINDING SIGN
1014F	REAL TIME ARRIVAL SIGN
1152A	RECESSED DIGITAL TOUCH DISPLAY SIGNAGE
1293A	TRASH/RECYCLING RECEPTACLE WITH SOLAR COMPACTION
1293E	RUB RAIL PER CIVIL
1293H	BENCH
1293I	LEAN RAIL
1293T	TICKET VENDING MACHINE
1293V	TICKET VALIDATION MACHINE
2656A	EXTERIOR LIGHTING, REF ELECTRICAL
3217	TACTILE WARNING PAVER

neighboring concepts
NEIGHBORING CONCEPTS, PLLC
1635 West Trade Street, Suite 1A
Charlotte, North Carolina 28216
NC Cert. No: 51098

INCOMPLETE PLANS
DO NOT USE FOR R/W ACQUISITION

CITY OF RALEIGH
ENGINEERING SERVICES
DEPARTMENT

DOCUMENT NOT CONSIDERED FINAL UNLESS ALL SIGNATURES COMPLETED

STATION TYPE B - SUB-URBAN

PROJECT:
WAKE BRT
NEW BERN AVE

DATE:	1/28/2022
SHEET BY:	AMK
CHECKED BY:	LAV

REVISIONS

NO.	DATE

SCALES

SA-211

I:\31\2022_5:39:18 PM
BIM 360:\31-CON Wake BRT\31-001_Wake BRT Sub_Arch_Central.rvt

neighboring concepts
NEIGHBORING CONCEPTS, PLLC
1635 West Trade Street, Suite 1A
Charlotte, North Carolina 28216
NC Cert. No: 51098

INCOMPLETE PLANS
DO NOT USE FOR R/W ACQUISITION

KEYNOTE LEGEND

NUMBER	KEYNOTE
0330S	CONCRETE RAMP, REFER TO CIVIL AND STRUCTURAL
0552A	STEEL TUBE RAILING, REF SA-305
1014E	INTERNALLY ILLUMINATED WAYFINDING SIGN
1014F	REAL TIME ARRIVAL SIGN
1152A	RECESSED DIGITAL TOUCH DISPLAY SIGNAGE
1293A	TRASH/RECYCLING RECEPTACLE WITH SOLAR COMPACTION
1293H	BENCH
1293I	LEAN RAIL
1293P	POST MOUNTED USB CHARGING, SEE ELECTRICAL
1293T	TICKET VENDING MACHINE
1293V	TICKET VALIDATION MACHINE
2656B	SECURITY CAMERA, REF ELECTRICAL
2656C	SPEAKER, REF ELECTRICAL
3214C	FARE ZONE PAVER
3217	TACTILE WARNING PAVER

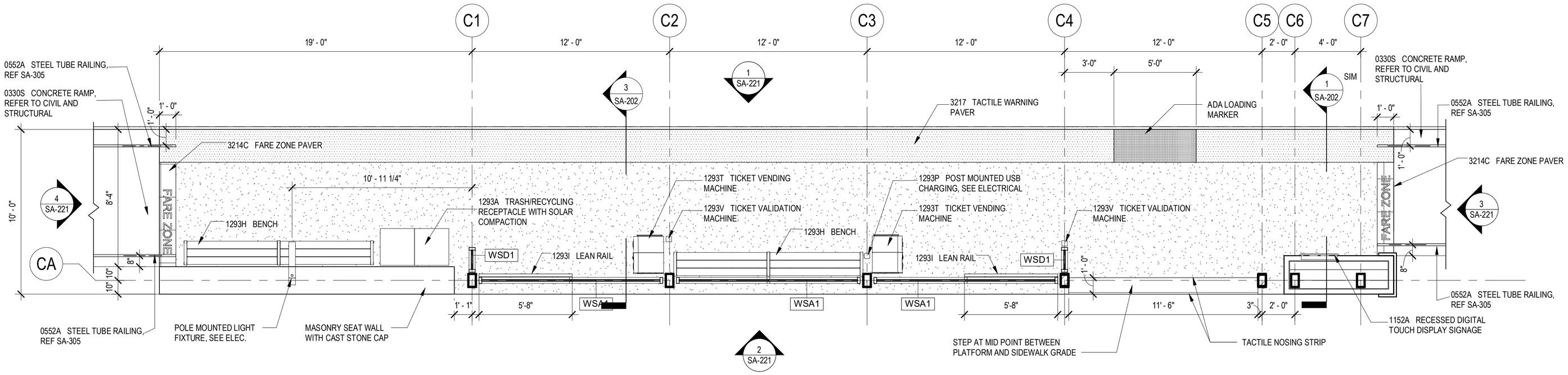

1 SA-220 **INTERMODAL STATION - PLAN**
SCALE: 1/4" = 1'-0"

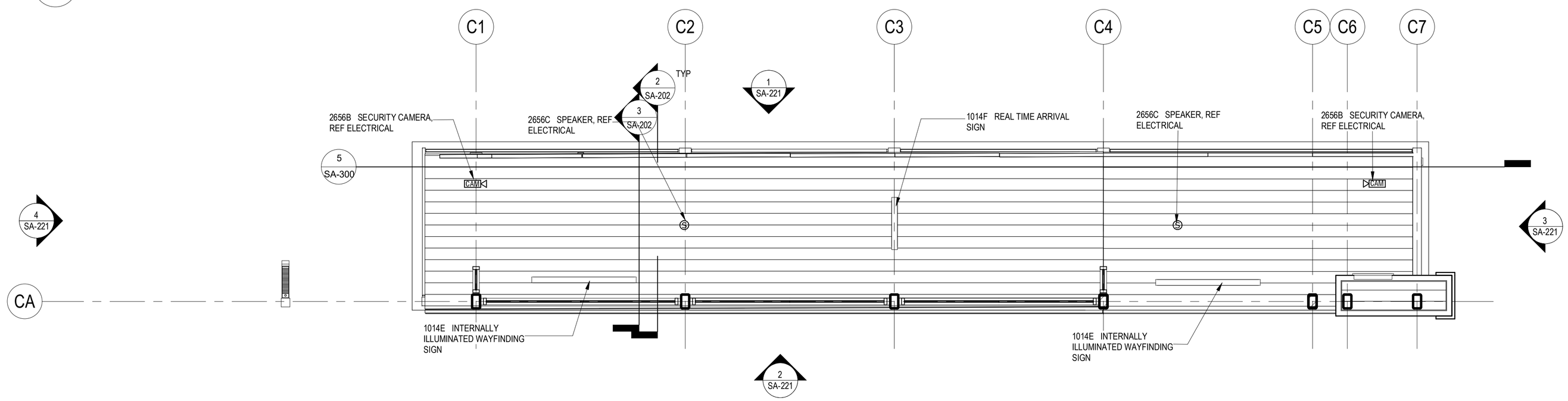

2 SA-220 **INTERMODAL STATION - REFLECTED CEILING PLAN**
SCALE: 1/4" = 1'-0"

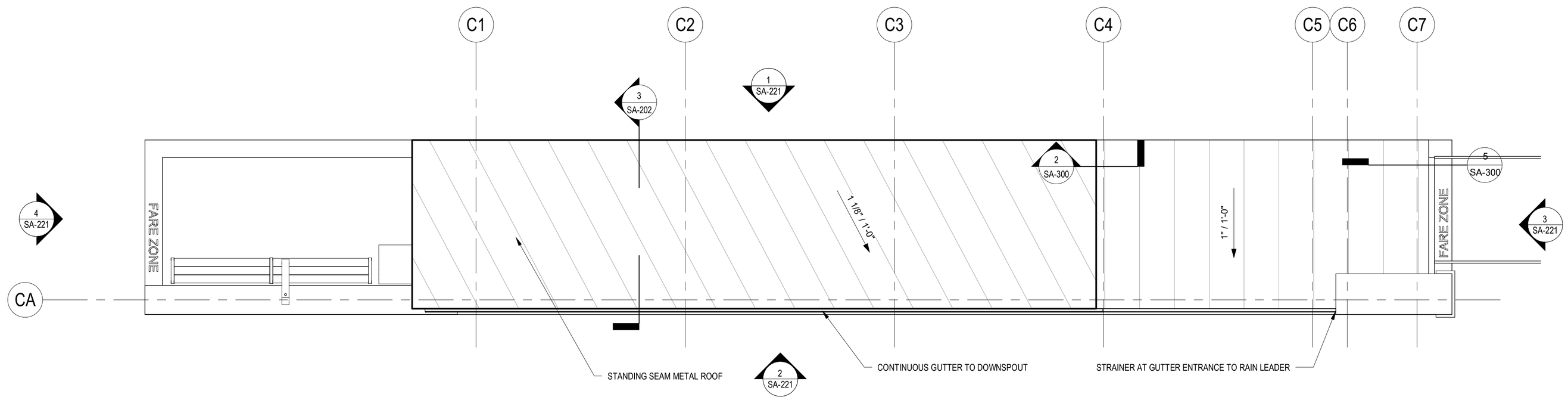

3 SA-220 **INTERMODAL STATION - ROOF PLAN**
SCALE: 1/4" = 1'-0"

CITY OF RALEIGH
ENGINEERING SERVICES DEPARTMENT

DOCUMENT NOT CONSIDERED FINAL UNLESS ALL SIGNATURES COMPLETED

STATION TYPE C - INTERMODAL

PROJECT:
WAKE BRT
NEW BERN AVE

DATE:	1/28/2022
SHEET BY:	AMK
CHECKED BY:	LAV

REVISIONS

NO.	DATE

SCALES

SA-220

1/24/2022 3:27:05 PM
I:\BE_BRT\SDP\07 Wake BRT\SDP\07_Wake BRT_RDD_Arch_Central.rvt

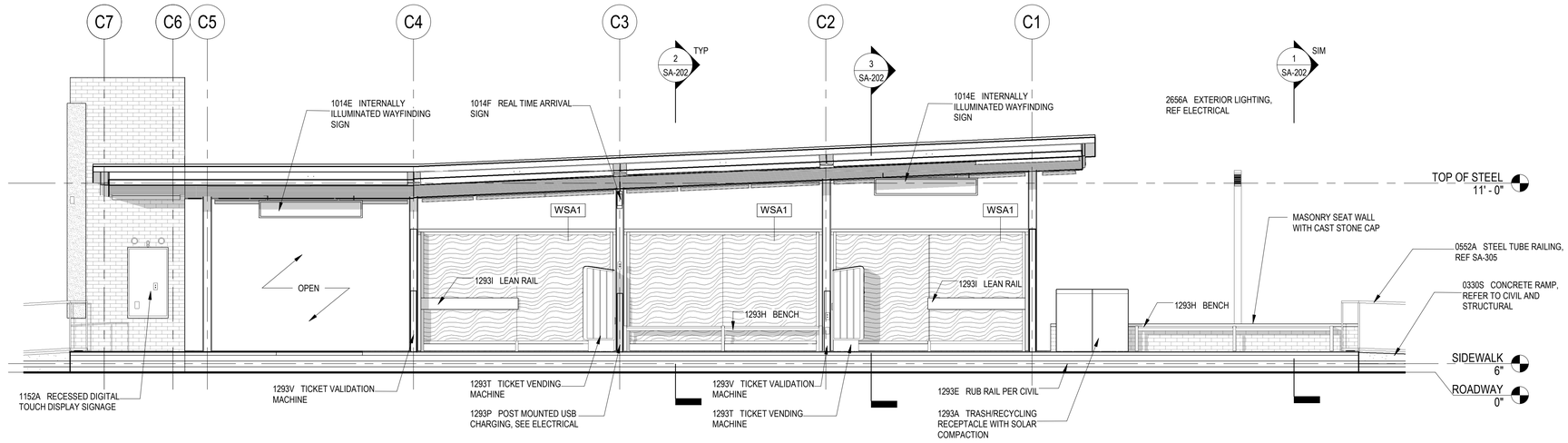

1 SA-221 **INTERMODAL STATION - FRONT ELEVATION**

SCALE: 1/4" = 1'-0"

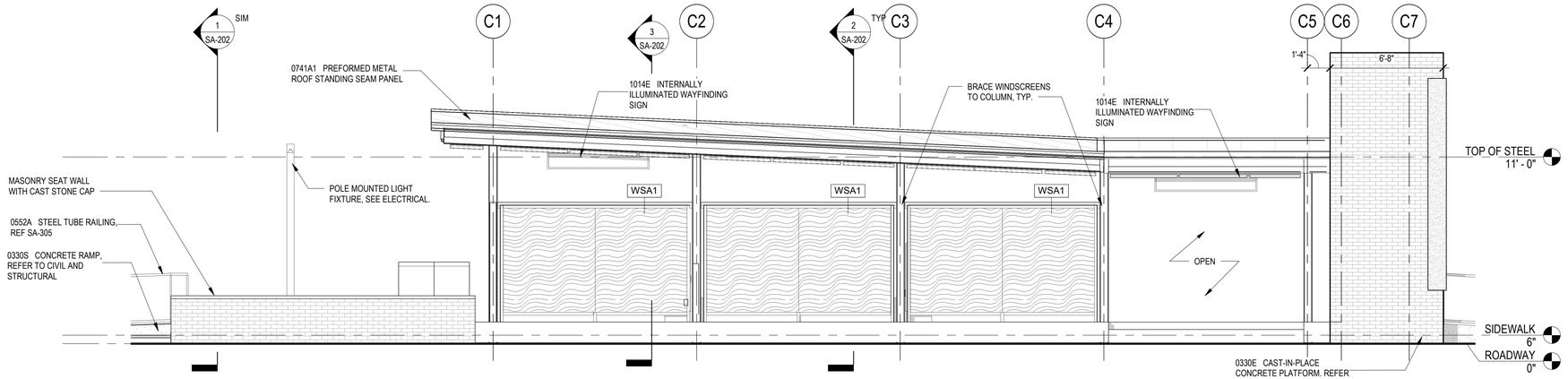

2 SA-221 **INTERMODAL STATION - BACK ELEVATION**

SCALE: 1/4" = 1'-0"

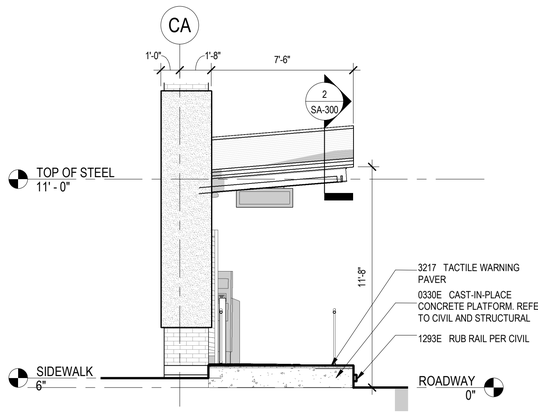

3 SA-221 **INTERMODAL STATION - ELEVATION 4**

SCALE: 1/4" = 1'-0"

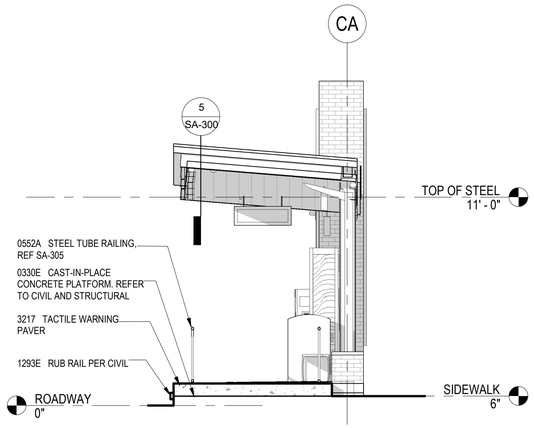

4 SA-221 **INTERMODAL STATION - ELEVATION 3**

SCALE: 1/4" = 1'-0"

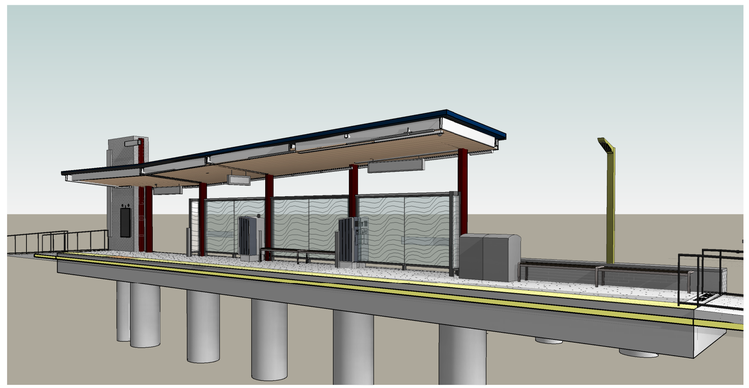

5 SA-221 **INTERMODAL STATION PERSPECTIVE**

NOT TO SCALE

neighboring concepts
NEIGHBORING CONCEPTS, PLLC
1635 West Trade Street, Suite 1A
Charlotte, North Carolina 28216
NC Cert. No: 51098

INCOMPLETE PLANS
DO NOT USE FOR R/W ACQUISITION

KEYNOTE LEGEND

NUMBER	KEYNOTE
0330E	CAST-IN-PLACE CONCRETE PLATFORM. REFER TO CIVIL AND STRUCTURAL
0330S	CONCRETE RAMP, REFER TO CIVIL AND STRUCTURAL
0552A	STEEL TUBE RAILING, REF SA-305
0741A1	PREFORMED METAL ROOF STANDING SEAM PANEL
1014E	INTERNALLY ILLUMINATED WAYFINDING SIGN
1014F	REAL TIME ARRIVAL SIGN
1152A	RECESSED DIGITAL TOUCH DISPLAY SIGNAGE
1293A	TRASH/RECYCLING RECEPTACLE WITH SOLAR COMPACTION
1293E	RUB RAIL PER CIVIL
1293H	BENCH
1293I	LEAN RAIL
1293P	POST MOUNTED USB CHARGING, SEE ELECTRICAL
1293T	TICKET VENDING MACHINE
1293V	TICKET VALIDATION MACHINE
3217	TACTILE WARNING PAVER

CITY OF RALEIGH
ENGINEERING SERVICES DEPARTMENT

DOCUMENT NOT CONSIDERED FINAL UNLESS ALL SIGNATURES COMPLETED

STATION TYPE C - INTERMODAL

PROJECT:
WAKE BRT
NEW BERN AVE

DATE:	1/28/2022
SHEET BY:	AMK
CHECKED BY:	LAV

REVISIONS

NO.	DATE

SCALES

SA-221

1/31/2022 5:32:15 PM
M:\Projects\2020\Wake BRT\20-067_Wake BRT_800_Arch_Central.rvt

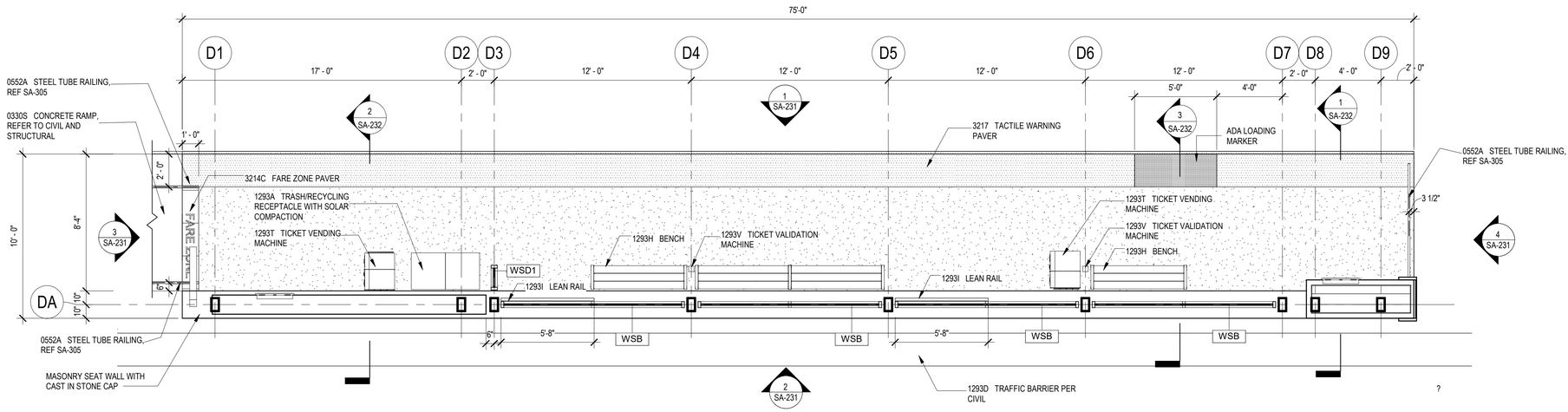

1 SA-230 SPLIT ISLAND STATION - PLAN

SCALE: 1/4" = 1'-0"

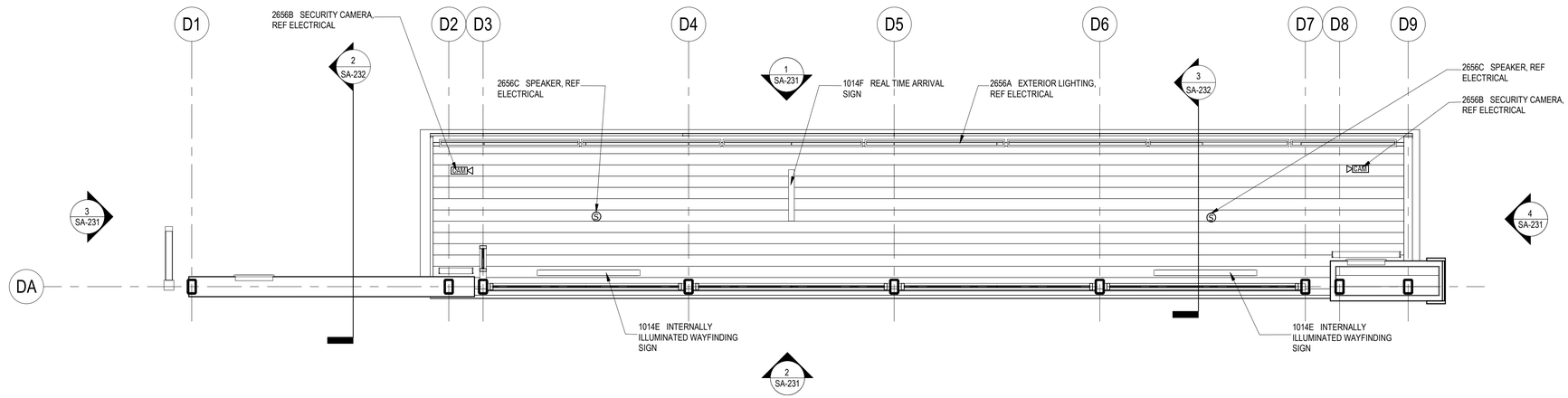

2 SA-230 SPLIT ISLAND STATION - REFLECTED CEILING PLAN

SCALE: 1/4" = 1'-0"

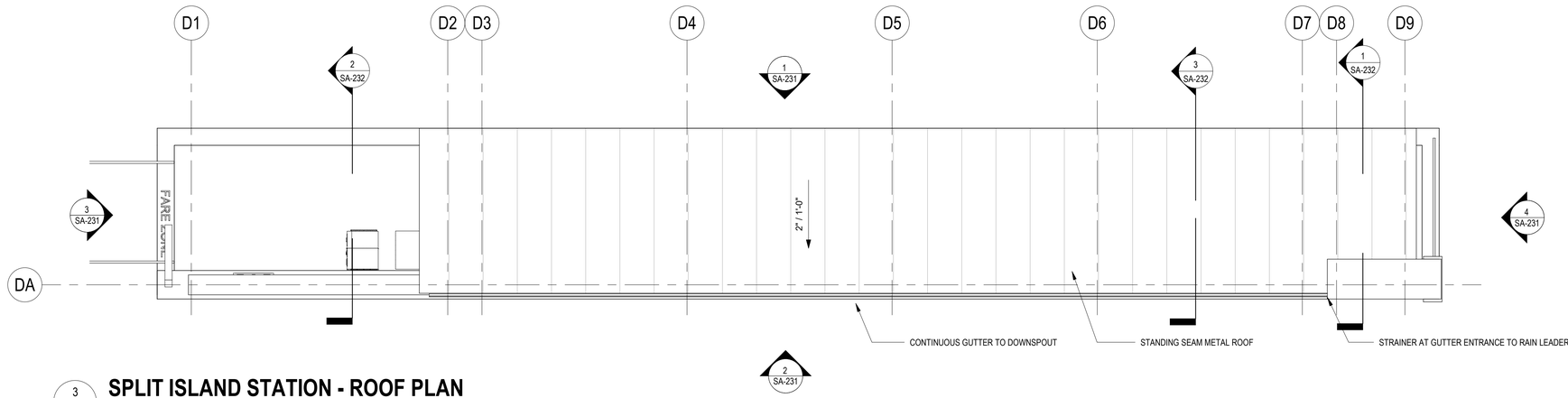

3 SA-230 SPLIT ISLAND STATION - ROOF PLAN

SCALE: 1/4" = 1'-0"

neighboring concepts

NEIGHBORING CONCEPTS, PLLC
1635 West Trade Street, Suite 1A
Charlotte, North Carolina 28216
NC Cert. No: 51098

INCOMPLETE PLANS
DO NOT USE FOR R/W ACQUISITION

KEYNOTE LEGEND

NUMBER	KEYNOTE
0330S	CONCRETE RAMP, REFER TO CIVIL AND STRUCTURAL
0552A	STEEL TUBE RAILING, REF SA-305
1014E	INTERNALLY ILLUMINATED WAYFINDING SIGN
1014F	REAL TIME ARRIVAL SIGN
1293A	TRASH/RECYCLING RECEPTACLE WITH SOLAR COMPACTION
1293D	TRAFFIC BARRIER PER CIVIL
1293H	BENCH
1293I	LEAN RAIL
1293T	TICKET VENDING MACHINE
1293V	TICKET VALIDATION MACHINE
2656A	EXTERIOR LIGHTING, REF ELECTRICAL
2656B	SECURITY CAMERA, REF ELECTRICAL
2656C	SPEAKER, REF ELECTRICAL
3214C	FARE ZONE PAVER
3217	TACTILE WARNING PAVER

CITY OF RALEIGH
ENGINEERING SERVICES DEPARTMENT

DOCUMENT NOT CONSIDERED FINAL UNLESS ALL SIGNATURES COMPLETED

STATION TYPE D - SPLIT ISLAND

PROJECT: WAKE BRT NEW BERN AVE

DATE:	1/28/2022
SHEET BY:	AMK
CHECKED BY:	LAV

REVISIONS

NO.	DATE

SCALES

SA-230

1/31/2022 5:22:40 PM
BIM 360://20-007 Wake BRT/20-007_Wake BRT_R20_Arch_Central.rvt

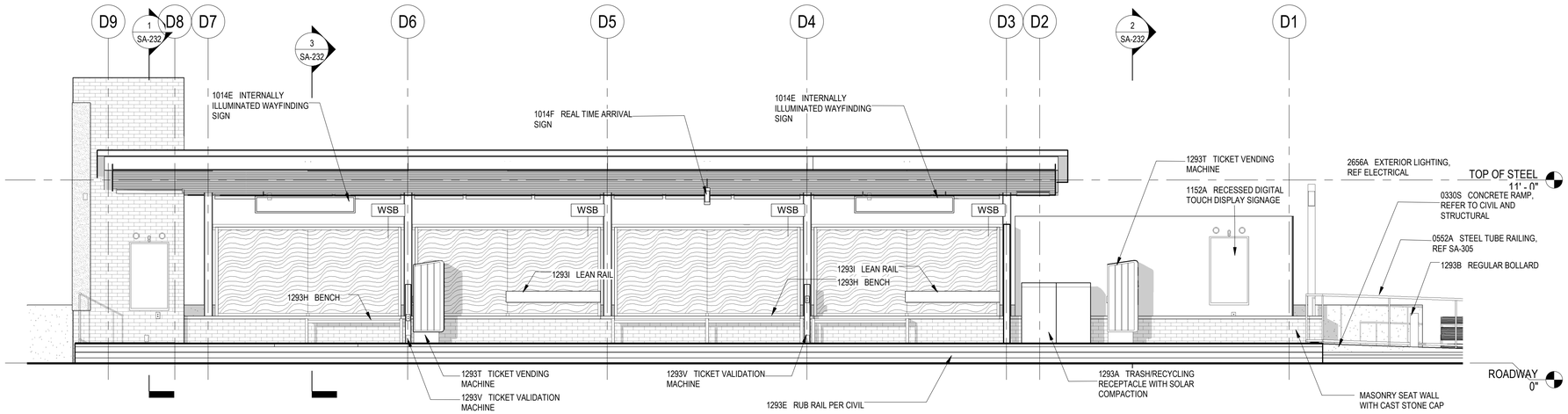

1 SA-231 **SPLIT ISLAND - FRONT ELEVATION**

SCALE: 1/4" = 1'-0"

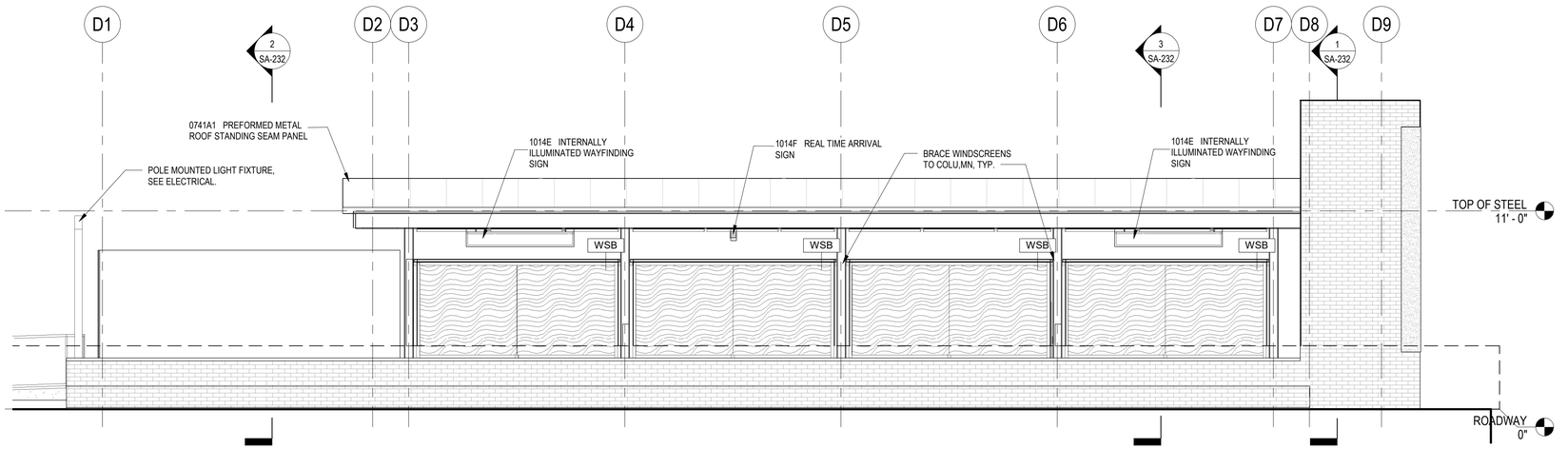

2 SA-231 **SPLIT ISLAND - BACK ELEVATION**

SCALE: 1/4" = 1'-0"

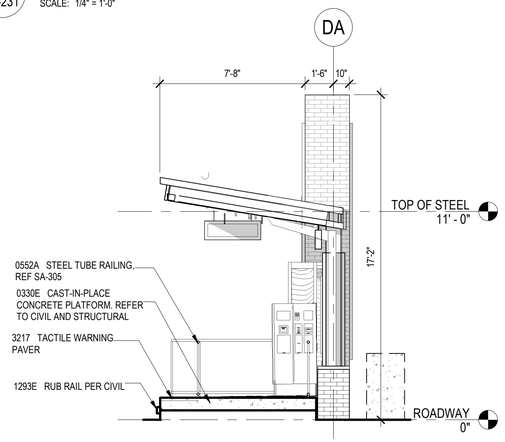

3 SA-231 **SPLIT ISLAND - ELEVATION 3**

SCALE: 1/4" = 1'-0" R.E. = 1/SA-230

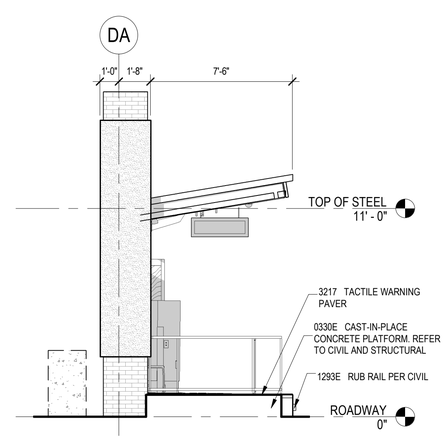

4 SA-231 **SPLIT ISLAND - ELEVATION 4**

SCALE: 1/4" = 1'-0" R.E. = 1/SA-230

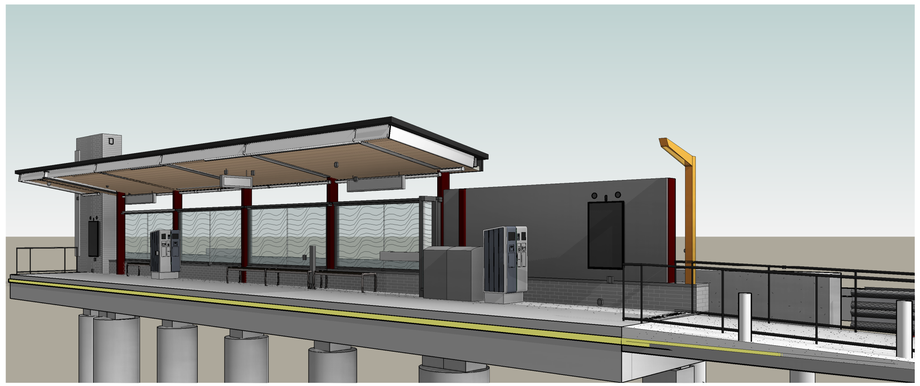

5 SA-231 **SPLIT ISLAND STATION PERSPECTIVE**

NOT TO SCALE

KEYNOTE LEGEND

NUMBER	KEYNOTE
0330E	CAST-IN-PLACE CONCRETE PLATFORM. REFER TO CIVIL AND STRUCTURAL
0330S	CONCRETE RAMP, REFER TO CIVIL AND STRUCTURAL
0552A	STEEL TUBE RAILING, REF SA-305
0741A1	PREFORMED METAL ROOF STANDING SEAM PANEL
1014E	INTERNALLY ILLUMINATED WAYFINDING SIGN
1014F	REAL TIME ARRIVAL SIGN
1152A	RECESSED DIGITAL TOUCH DISPLAY SIGNAGE
1293A	TRASH/RECYCLING RECEPTACLE WITH SOLAR COMPACTION
1293B	REGULAR BOLLARD
1293E	RUB RAIL PER CIVIL
1293H	BENCH
1293I	LEAN RAIL
1293T	TICKET VENDING MACHINE
1293V	TICKET VALIDATION MACHINE
3217	TACTILE WARNING PAVER

neighboring concepts
NEIGHBORING CONCEPTS, PLLC
1635 West Trade Street, Suite 1A
Charlotte, North Carolina 28216
NC Cert. No: 51098

INCOMPLETE PLANS
DO NOT USE FOR R/W ACQUISITION

CITY OF RALEIGH
ENGINEERING SERVICES DEPARTMENT

DOCUMENT NOT CONSIDERED FINAL UNLESS ALL SIGNATURES COMPLETED

STATION TYPE D - SPLIT ISLAND

PROJECT: WAKE BRT NEW BERN AVE

DATE:	1/28/2022
SHEET BY:	AMK
CHECKED BY:	LAV

REVISIONS

NO.	DATE

SCALES

SA-231

1/21/2022, 5:16:08 PM
I:\SW\2020\CW\07 Wake BRT\20CW07_Wake BRT PDD_Arch_Central.rvt

neighboring concepts
NEIGHBORING CONCEPTS, PLLC
1635 West Trade Street, Suite 1A
Charlotte, North Carolina 28216
NC Cert. No: 51098

INCOMPLETE PLANS
DO NOT USE FOR R/W ACQUISITION

KEYNOTE LEGEND

NUMBER	KEYNOTE
07 40 00	WOODLIKE COMPOSITE SOFFIT
07 42 00	METAL WALL PANELS
0540C6	6" METAL STUD
0552A	STEEL TUBE RAILING, REF SA-305
0616P2	1/2" PLYWOOD SHEATHING
0741A1	PREFORMED METAL ROOF STANDING SEAM PANEL
0771A	CONTINUOUS GUTTER WITH DOWNSPOUT
1014E	INTERNALLY ILLUMINATED WAYFINDING SIGN
1014F	REAL TIME ARRIVAL SIGN
1073A	GLAZED, ALUMINUM FRAMED WINDSCREEN
1152A	RECESSED DIGITAL TOUCH DISPLAY SIGNAGE
1293E	RUB RAIL PER CIVIL
1293T	TICKET VENDING MACHINE
3217	TACTILE WARNING PAVER

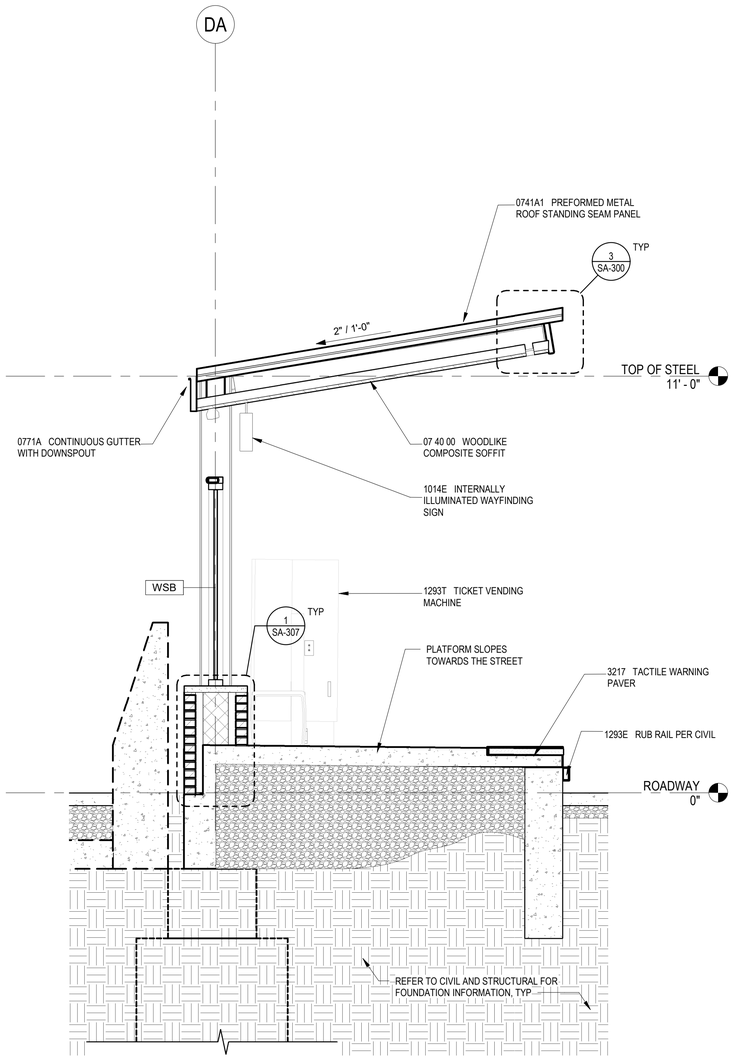

3 SA-232 **SPLIT ISLAND STATION - SECTION 3**
SCALE: 1/2" = 1'-0" R.E. = 1/SA-230

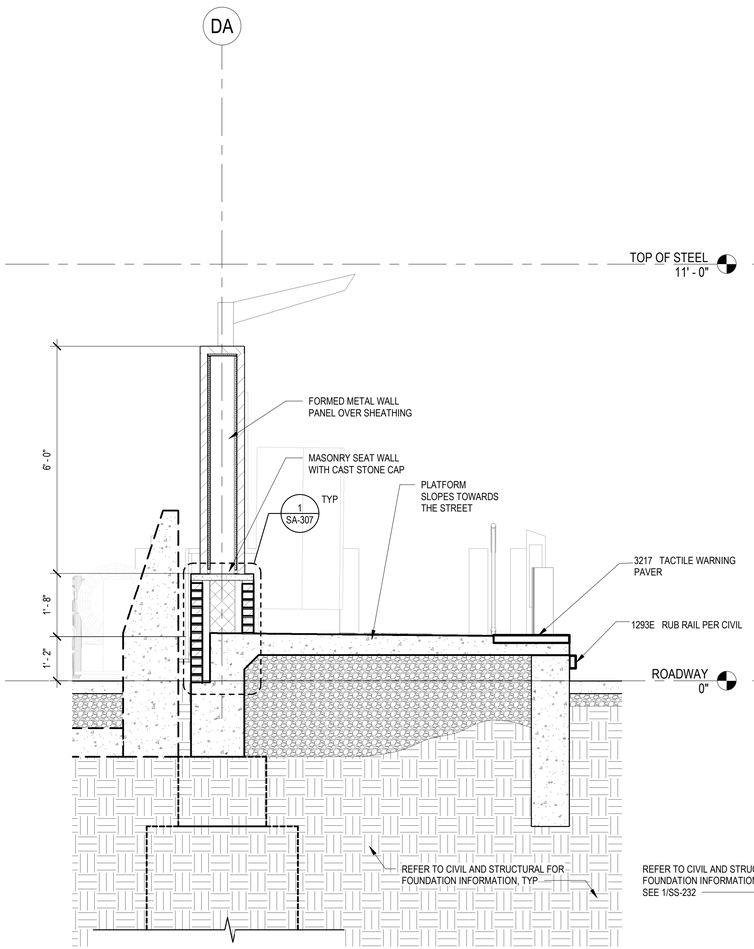

2 SA-232 **SPLIT ISLAND STATION - SECTION 2**
SCALE: 1/2" = 1'-0"

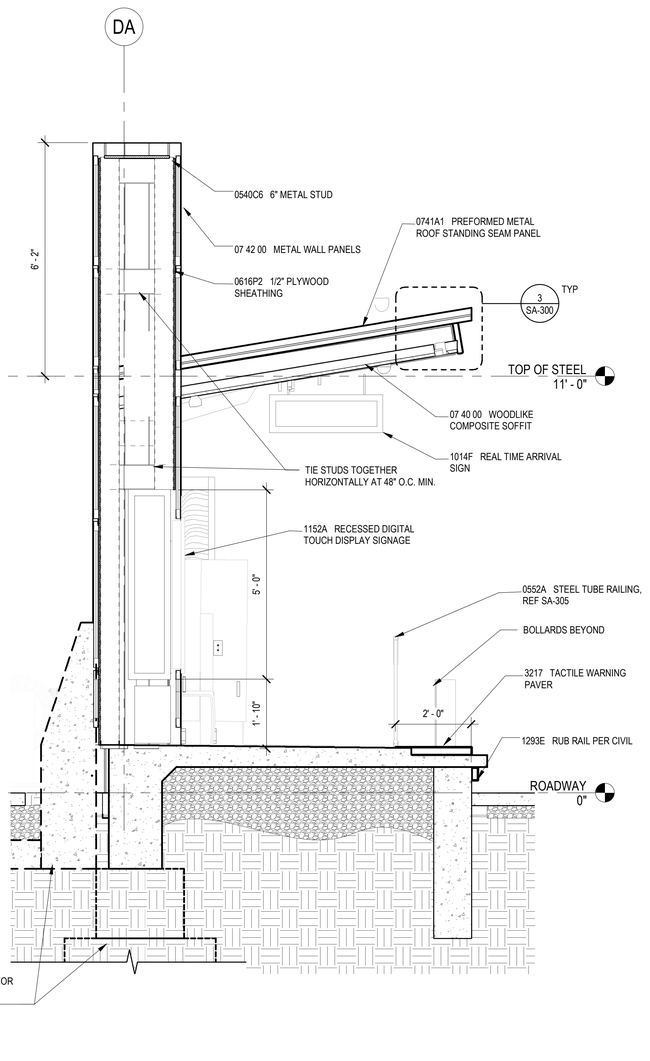

1 SA-232 **SPLIT ISLAND STATION - SECTION 1**
SCALE: 1/2" = 1'-0"

CITY OF RALEIGH
ENGINEERING SERVICES DEPARTMENT

DOCUMENT NOT CONSIDERED FINAL UNLESS ALL SIGNATURES COMPLETED

SPLIT ISLAND CANOPY SECTIONS

PROJECT:
WAKE BRT
NEW BERN AVE

DATE:	1/28/2022
SHEET BY:	AMK
CHECKED BY:	LAV

REVISIONS

NO.	DATE

SCALES

SA-232

1/31/2022 5:07:37 PM
M:\BRT\DOS\Wake BRT\DOs\01_Wake BRT_BOD_Arch_Central.rvt

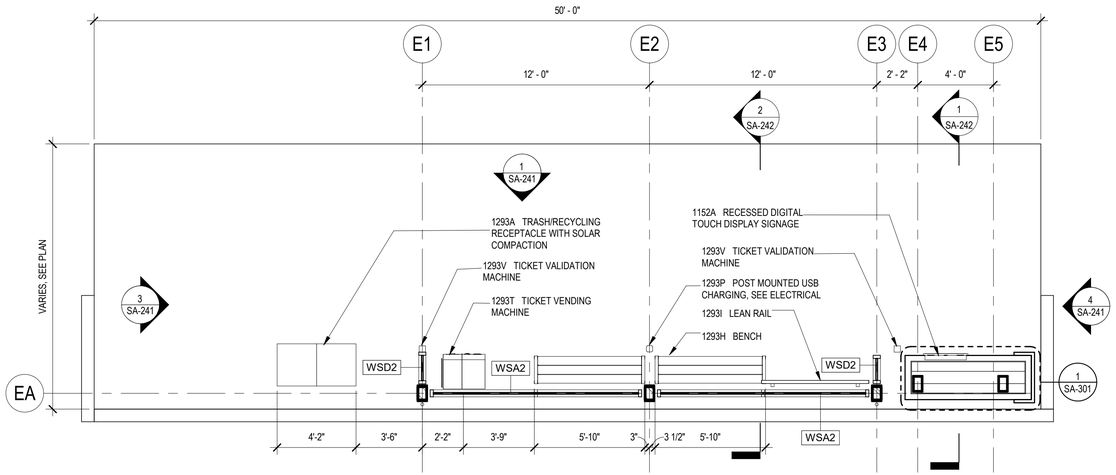

1 SA-240 PERIPHERAL 1 STATION - PLAN

SCALE: 1/4" = 1'-0"

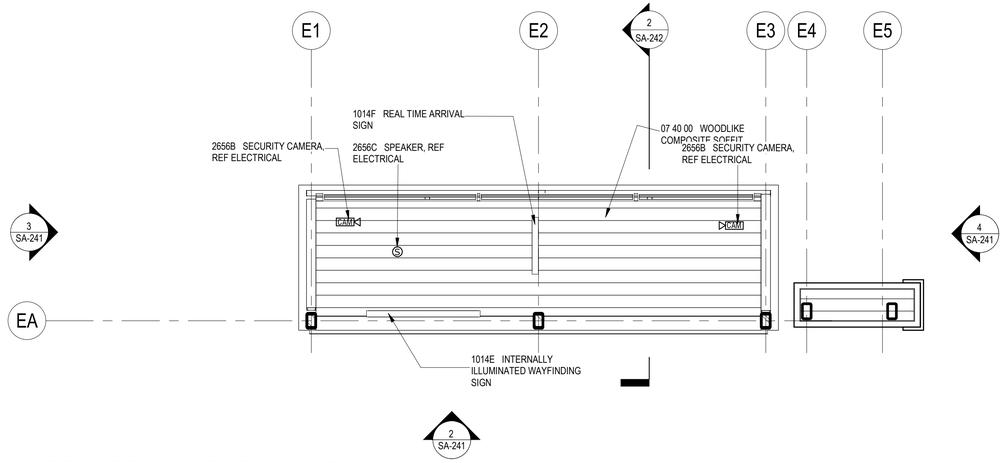

2 SA-240 PERIPHERAL 1 STATION - RCP

SCALE: 1/4" = 1'-0"

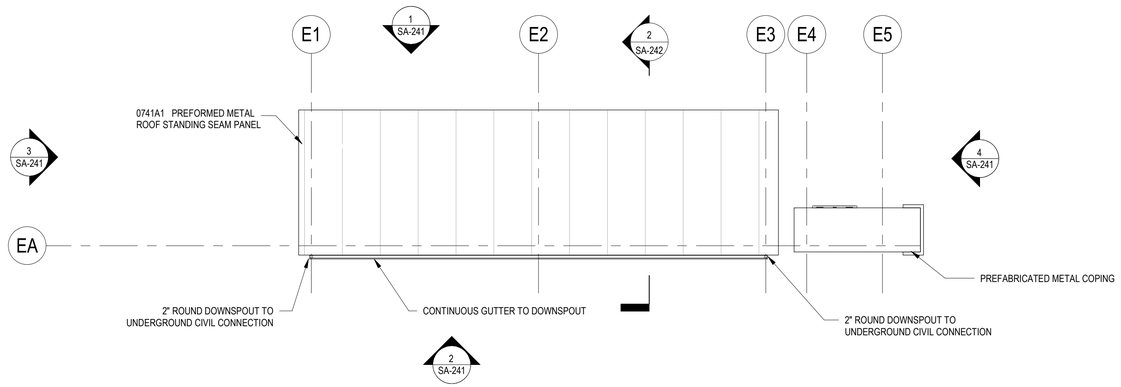

3 SA-240 PERIPHERAL 1 STATION - ROOF PLAN

SCALE: 1/4" = 1'-0" R.E. = 1/SA-201

neighboring concepts

NEIGHBORING CONCEPTS, PLLC
1635 West Trade Street, Suite 1A
Charlotte, North Carolina 28216
NC Cert. No: 51098

INCOMPLETE PLANS
DO NOT USE FOR R/W ACQUISITION

KEYNOTE LEGEND

NUMBER	KEYNOTE
07 40 00	WOODLIKE COMPOSITE SOFFIT
0741A1	PREFORMED METAL ROOF STANDING SEAM PANEL
1014E	INTERNALLY ILLUMINATED WAYFINDING SIGN
1014F	REAL TIME ARRIVAL SIGN
1152A	RECESSED DIGITAL TOUCH DISPLAY SIGNAGE
1293A	TRASH/RECYCLING RECEPTACLE WITH SOLAR COMPACTION
1293H	BENCH
1293I	LEAN RAIL
1293P	POST MOUNTED USB CHARGING, SEE ELECTRICAL
1293T	TICKET VENDING MACHINE
1293V	TICKET VALIDATION MACHINE
2656B	SECURITY CAMERA, REF ELECTRICAL
2656C	SPEAKER, REF ELECTRICAL

CITY OF RALEIGH
ENGINEERING SERVICES DEPARTMENT

DOCUMENT NOT CONSIDERED FINAL UNLESS ALL SIGNATURES COMPLETED

STATION TYPE E - PERIPHERAL 1

PROJECT: WAKE BRT NEW BERN AVE

DATE:	1/28/2022
SHEET BY:	AMK
CHECKED BY:	LAV

REVISIONS

NO.	DATE

SCALES

SA-240

1/31/2022 4:23:56 PM
BIM 360://20-007 Wake BRT/20-007_Wake BRT_R20_Arch_Central.rvt

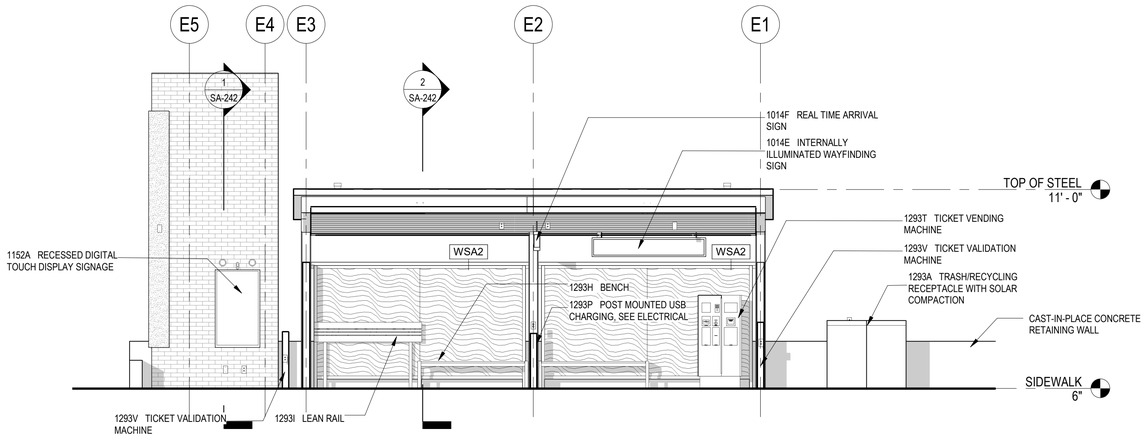

1 SA-241 **PERIPHERAL STATION - FRONT ELEVATION**

SCALE: 1/4" = 1'-0"

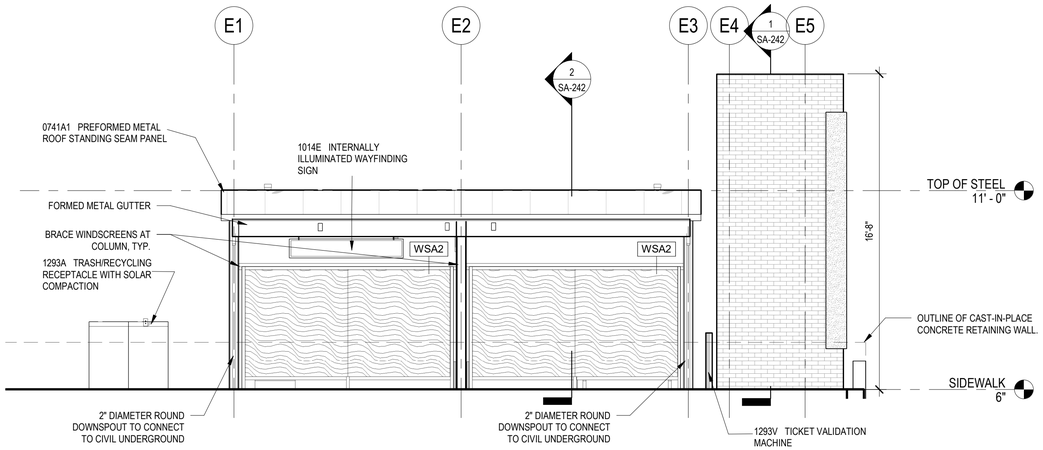

2 SA-241 **PERIPHERAL STATION - BACK ELEVATION**

SCALE: 1/4" = 1'-0"

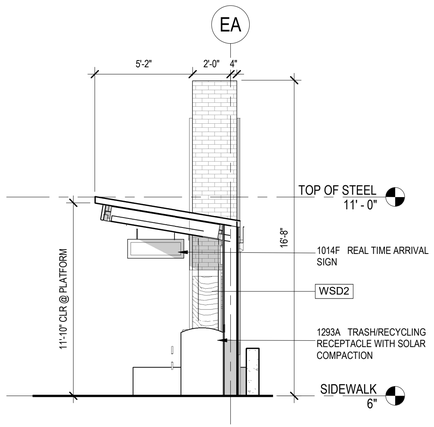

3 SA-241 **PERIPHERAL STATION - ELEVATION 3**

SCALE: 1/4" = 1'-0"

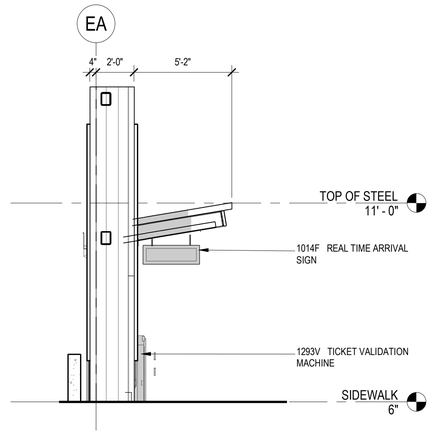

4 SA-241 **PERIPHERAL STATION - ELEVATION 4**

SCALE: 1/4" = 1'-0"

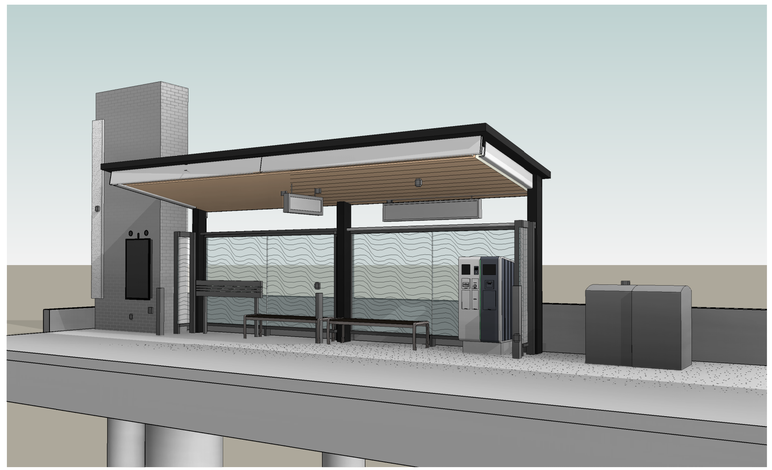

5 SA-241 **PERIPHERAL STATION PERSPECTIVE**

NOT TO SCALE

KEYNOTE LEGEND

NUMBER	KEYNOTE
0741A1	PREFORMED METAL ROOF STANDING SEAM PANEL
1014E	INTERNALLY ILLUMINATED WAYFINDING SIGN
1014F	REAL TIME ARRIVAL SIGN
1152A	RECESSED DIGITAL TOUCH DISPLAY SIGNAGE
1293A	TRASH/RECYCLING RECEPTACLE WITH SOLAR COMPACTION
1293H	BENCH
1293I	LEAN RAIL
1293P	POST MOUNTED USB CHARGING, SEE ELECTRICAL
1293T	TICKET VENDING MACHINE
1293V	TICKET VALIDATION MACHINE

neighboring concepts
NEIGHBORING CONCEPTS, PLLC
1635 West Trade Street, Suite 1A
Charlotte, North Carolina 28216
NC Cert. No: 51098

INCOMPLETE PLANS
DO NOT USE FOR R/W ACQUISITION

CITY OF RALEIGH
ENGINEERING SERVICES
DEPARTMENT

DOCUMENT NOT CONSIDERED FINAL UNLESS ALL SIGNATURES COMPLETED

STATION TYPE E - PERIPHERAL 1

PROJECT:
WAKE BRT
NEW BERN AVE

DATE:	1/28/2022
SHEET BY:	AMK
CHECKED BY:	LAV

REVISIONS

NO.	DATE

SCALES

SA-241

1/27/2022 4:21:48 PM
BIM 360://2007 Wake BRT/2x007_Wake BRT/2x007_Wake BRT_R20_Arch_Central.rvt

neighboring concepts

NEIGHBORING CONCEPTS, PLLC
1635 West Trade Street, Suite 1A
Charlotte, North Carolina 28216
NC Cert. No: 51098

INCOMPLETE PLANS
DO NOT USE FOR R/W ACQUISITION

KEYNOTE LEGEND

NUMBER	KEYNOTE
0771A	CONTINUOUS GUTTER WITH DOWNSPOUT
1073A	GLAZED, ALUMINUM FRAMED WINDSCREEN

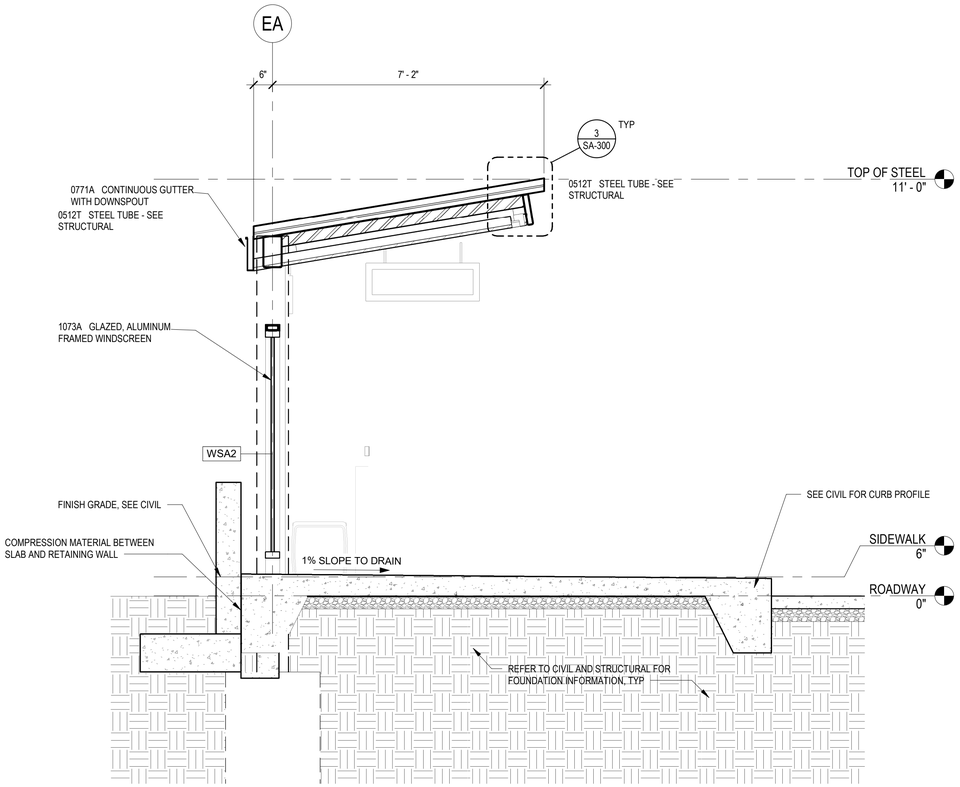

2
SA-242

PERIPHERAL STATION - SECTION 2

SCALE: 1/2" = 1'-0" R.E. = 1/SA-240

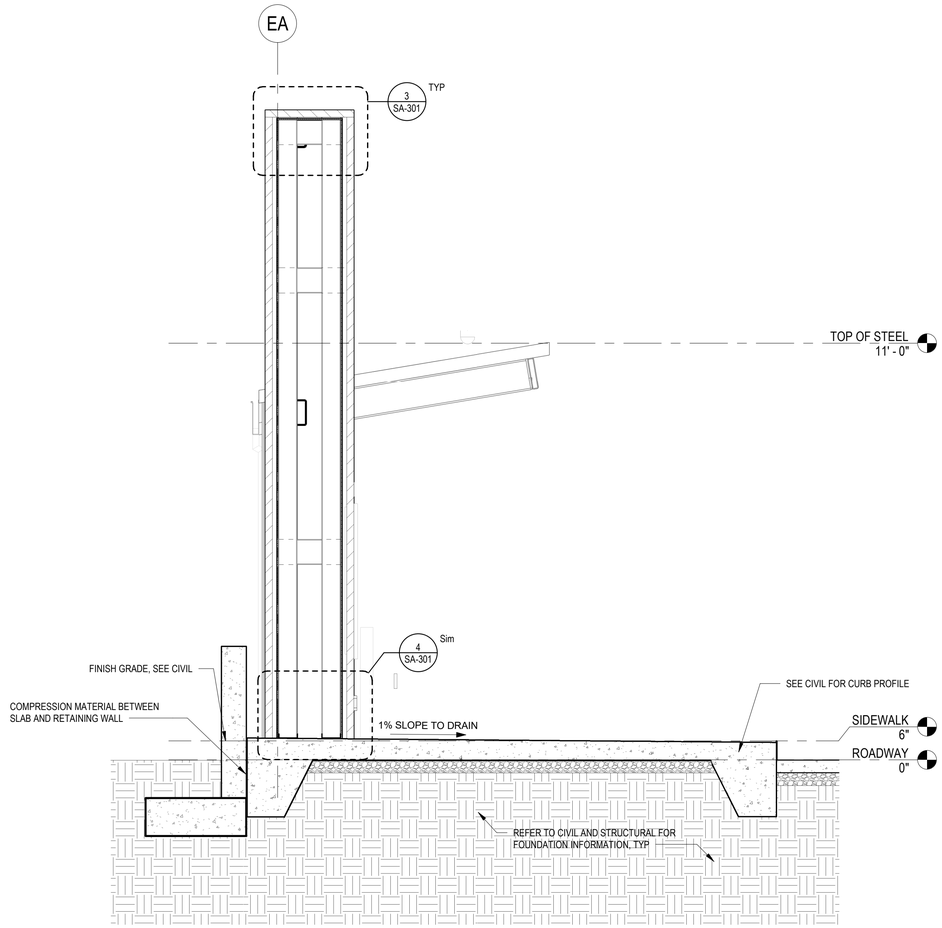

1
SA-242

PERIPHERAL STATION - SECTION 1

SCALE: 1/2" = 1'-0" R.E. = 1/SA-240

CITY OF RALEIGH
ENGINEERING SERVICES DEPARTMENT

DOCUMENT NOT CONSIDERED FINAL UNLESS ALL SIGNATURES COMPLETED

PERIPHERAL 1 CANOPY WALL SECTIONS

PROJECT: WAKE BRT NEW BERN AVE

DATE:	1/28/2022
SHEET BY:	AMK
CHECKED BY:	LAV

REVISIONS

NO.	DATE

SCALES

SA-242

1/31/2022 4:19:23 PM
BIM 360://20-007 Wake BRT/20-007_Wake BRT_R20_Arch_Central.rvt

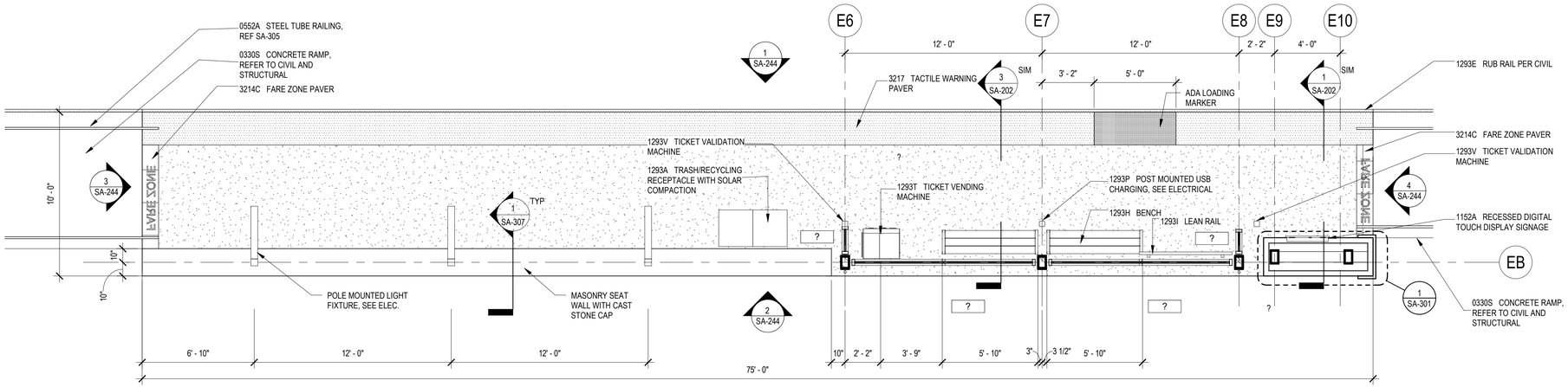

1 SA-243 PERIPHERAL 2 STATION - PLAN

SCALE: 1/4" = 1'-0" R.E. = 1/SA-190

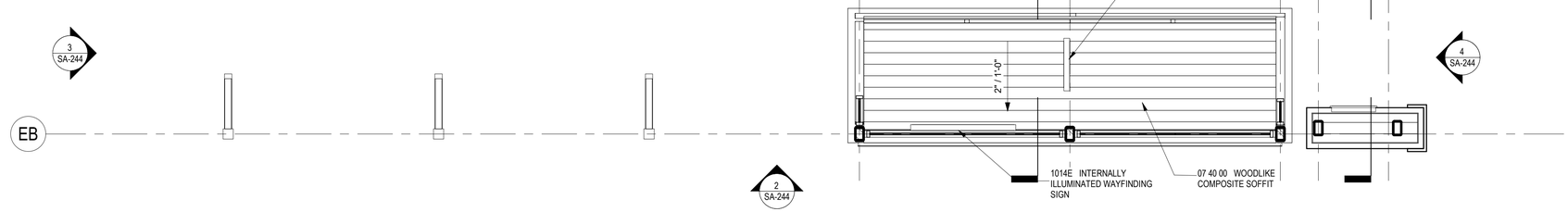

2 SA-243 PERIPHERAL 2 STATION - RCP

SCALE: 1/4" = 1'-0" R.E. = 1/SA-201

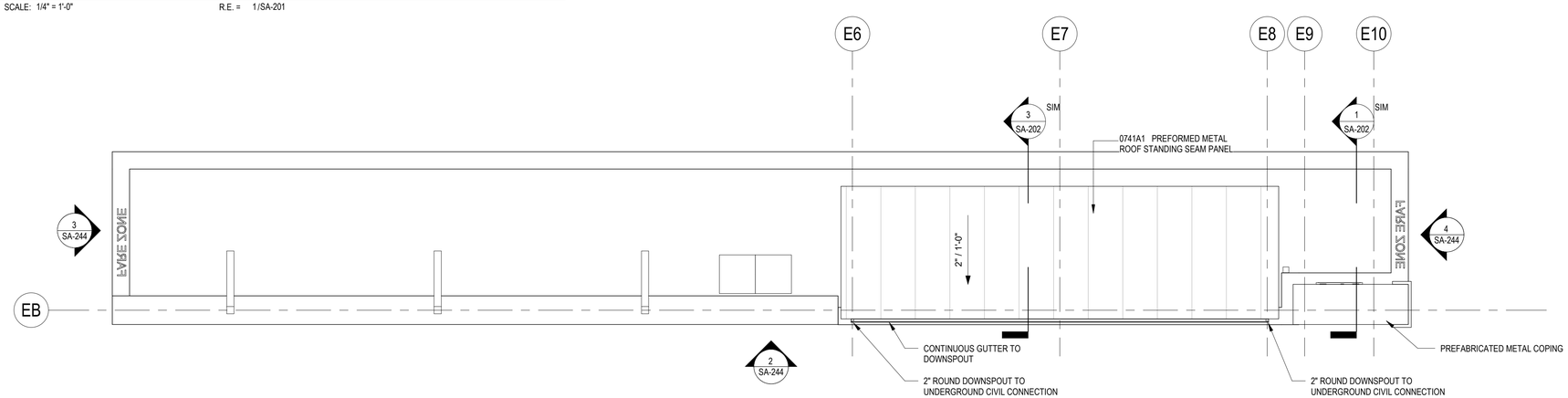

3 SA-243 PERIPHERAL 2 STATION - ROOF PLAN

SCALE: 1/4" = 1'-0" R.E. = 1/SA-201

KEYNOTE LEGEND

NUMBER	KEYNOTE
07 40 00	WOODLIKE COMPOSITE SOFFIT
0330S	CONCRETE RAMP, REFER TO CIVIL AND STRUCTURAL
0552A	STEEL TUBE RAILING, REF SA-305
0741A1	PREFORMED METAL ROOF STANDING SEAM PANEL
1014E	INTERNALLY ILLUMINATED WAYFINDING SIGN
1014F	REAL TIME ARRIVAL SIGN
1152A	RECESSED DIGITAL TOUCH DISPLAY SIGNAGE
1293A	TRASH/RECYCLING RECEPTACLE WITH SOLAR COMPACTION
1293E	RUB RAIL PER CIVIL
1293H	BENCH
1293I	LEAN RAIL
1293P	POST MOUNTED USB CHARGING, SEE ELECTRICAL
1293T	TICKET VENDING MACHINE
1293V	TICKET VALIDATION MACHINE
3214C	FARE ZONE PAVER
3217	TACTILE WARNING PAVER

neighboring concepts
NEIGHBORING CONCEPTS, PLLC
1635 West Trade Street, Suite 1A
Charlotte, North Carolina 28216
NC Cert. No: 51098

INCOMPLETE PLANS
DO NOT USE FOR R/W ACQUISITION

CITY OF RALEIGH
ENGINEERING SERVICES DEPARTMENT

DOCUMENT NOT CONSIDERED FINAL UNLESS ALL SIGNATURES COMPLETED

STATION TYPE E - PERIPHERAL 2

PROJECT:
WAKE BRT
NEW BERN AVE

DATE: 1/28/2022
SHEET BY: Author
CHECKED BY: Checker

REVISIONS

NO.	DATE

SCALES

SA-243

1/31/2022 4:12:51 PM
BIM 360://5067 Wake BRT/DWG/1 Wake BRT/DWG/01_Wake BRT_R20_Arch_Central.rvt

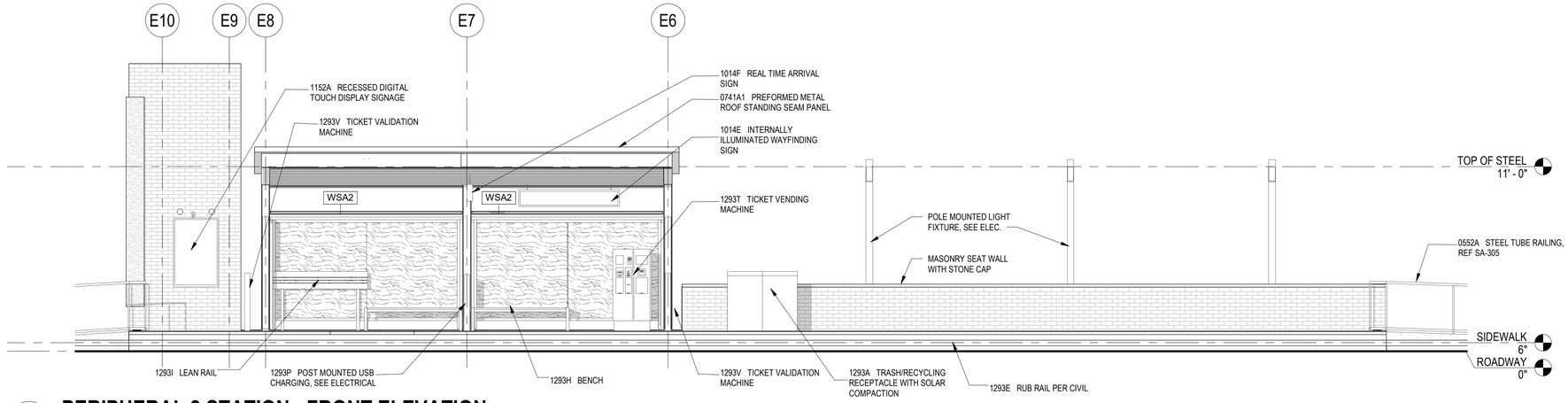

1 / SA-244 **PERIPHERAL 2 STATION - FRONT ELEVATION**

SCALE: 1/4" = 1'-0" R.E. = 1/SA-243

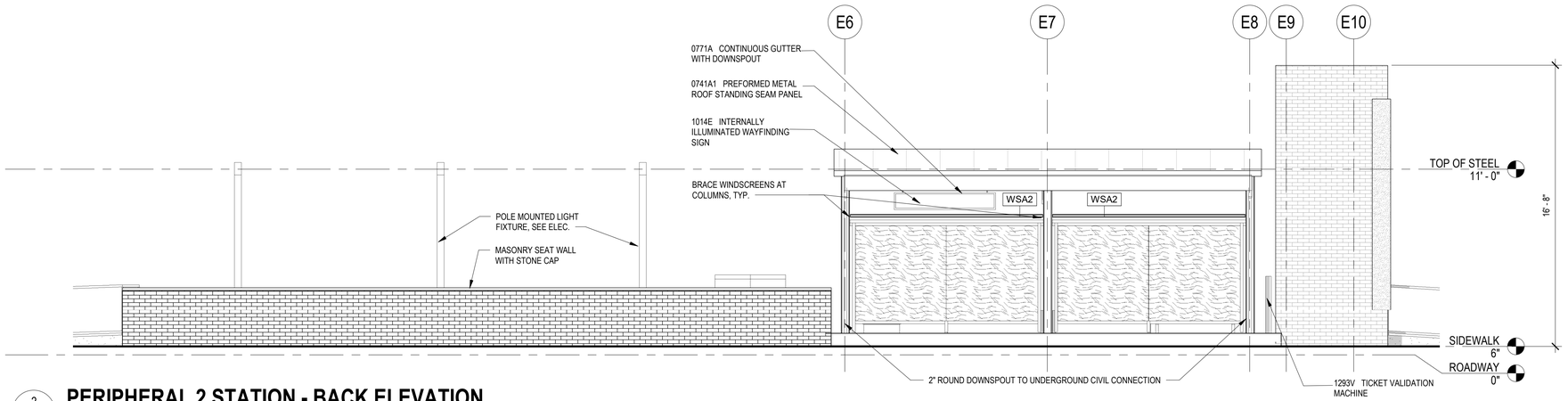

2 / SA-244 **PERIPHERAL 2 STATION - BACK ELEVATION**

SCALE: 1/4" = 1'-0" R.E. = 1/SA-243

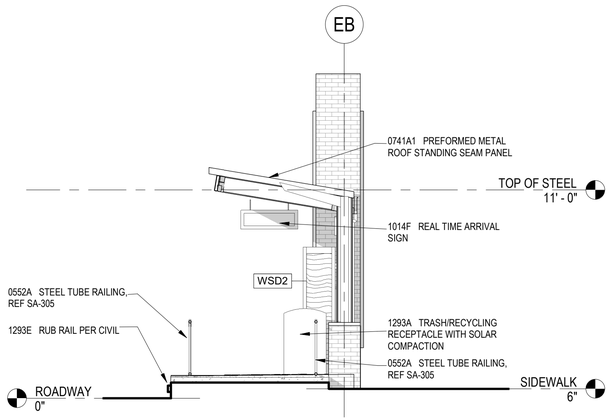

3 / SA-244 **PERIPHERAL 2 STATION - ELEVATION 3**

SCALE: 1/4" = 1'-0" R.E. = 1/SA-243

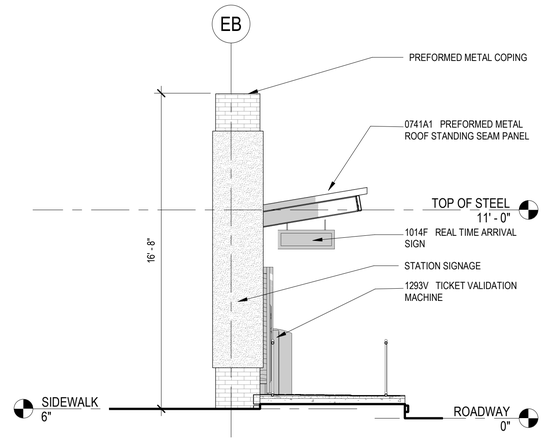

4 / SA-244 **PERIPHERAL 2 STATION - ELEVATION 4**

SCALE: 1/4" = 1'-0" R.E. = 1/SA-243

KEYNOTE LEGEND

NUMBER	KEYNOTE
0552A	STEEL TUBE RAILING, REF SA-305
0741A1	PREFORMED METAL ROOF STANDING SEAM PANEL
0771A	CONTINUOUS GUTTER WITH DOWNSPOUT
1014E	INTERNALLY ILLUMINATED WAYFINDING SIGN
1014F	REAL TIME ARRIVAL SIGN
1152A	RECESSED DIGITAL TOUCH DISPLAY SIGNAGE
1293A	TRASH/RECYCLING RECEPTACLE WITH SOLAR COMPACTION
1293E	RUB RAIL PER CIVIL
1293H	BENCH
1293I	LEAN RAIL
1293P	POST MOUNTED USB CHARGING, SEE ELECTRICAL
1293T	TICKET VENDING MACHINE
1293V	TICKET VALIDATION MACHINE

neighboring concepts
NEIGHBORING CONCEPTS, PLLC
1635 West Trade Street, Suite 1A
Charlotte, North Carolina 28216
NC Cert. No: 51098

INCOMPLETE PLANS
DO NOT USE FOR R/W ACQUISITION

CITY OF RALEIGH
ENGINEERING SERVICES
DEPARTMENT

DOCUMENT NOT CONSIDERED FINAL UNLESS ALL SIGNATURES COMPLETED

STATION TYPE E - PERIPHERAL 2

PROJECT:
WAKE BRT
NEW BERN AVE

DATE:	1/28/2022
SHEET BY:	Author
CHECKED BY:	Checker

REVISIONS

NO.	DATE

SCALES

SA-244

1/31/2022 4:07:03 PM
BIM 360://2020 Wake BRT/20-0001_Wake BRT_BIO_Arch_Central.rvt

neighboring concepts
NEIGHBORING CONCEPTS, PLLC
1635 West Trade Street, Suite 1A
Charlotte, North Carolina 28216
NC Cert. No: 51098

INCOMPLETE PLANS
DO NOT USE FOR R/W ACQUISITION

KEYNOTE LEGEND

NUMBER	KEYNOTE
05 75 00	DECORATIVE FORMED METAL
07 40 00	WOODLIKE COMPOSITE SOFFIT
0512A	STEEL ANGLE - SEE STRUCTURAL
0512B	STEEL BEAM - SEE STRUCTURAL
0512T	STEEL TUBE - SEE STRUCTURAL
0531C	COMPOSITE METAL DECKING, SEE STRUCTURAL
0540C8	8" METAL STUD
0540G	METAL STUD FRAMING
0610B4	PT WOOD NAILER
0616P2	1/2" PLYWOOD SHEATHING
0616P3	3/4" PLYWOOD SHEATHING
0741A1	PREFORMED METAL ROOF STANDING SEAM PANEL
0762E	CUSTOM PAINTED BOX GUTTER
0762F	METAL FLASHING
0762J	CRICKET BY ROOFING MANUFACTURER
0762K	VALLEY FLASHING BY ROOFING MANUFACTURER

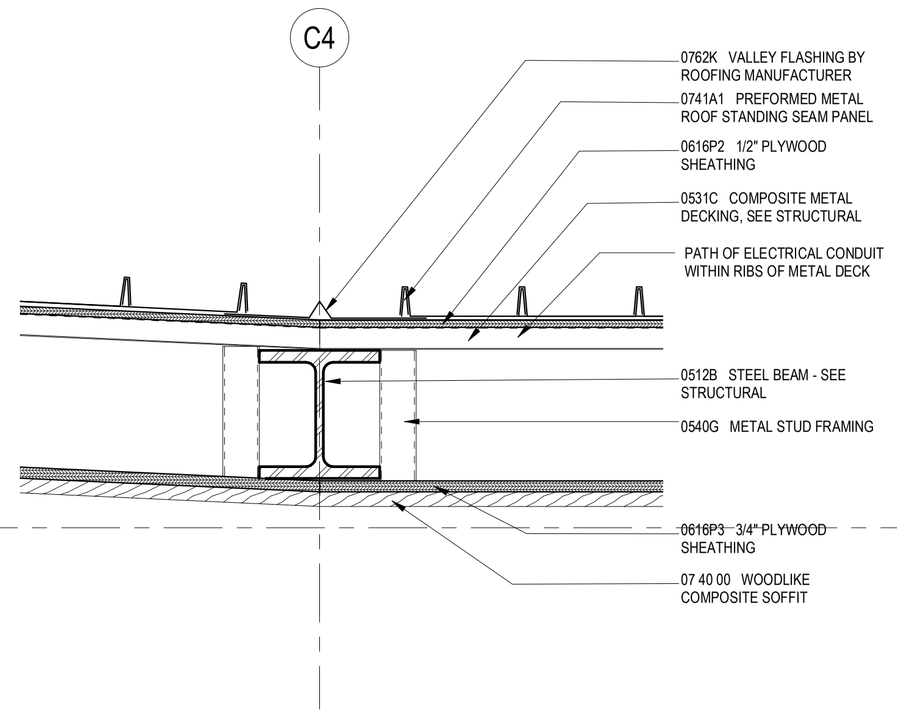

2 SA-300 **TYPICAL VALLEY SECTION**
SCALE: 1 1/2" = 1'-0" R.E. = 3/SA-220

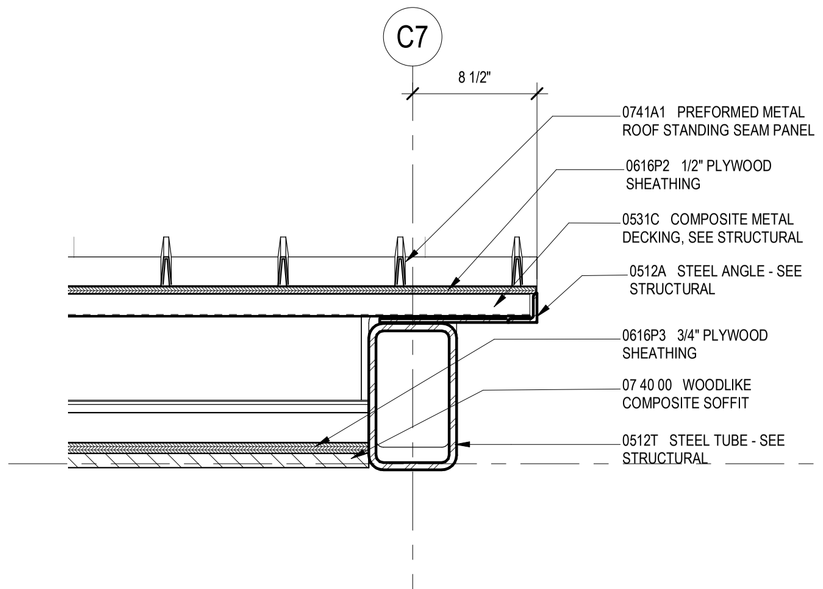

5 SA-300 **TYPICAL SIDE EDGE OF CANOPY DETAIL**
SCALE: 1 1/2" = 1'-0" R.E. = 5/SA-202

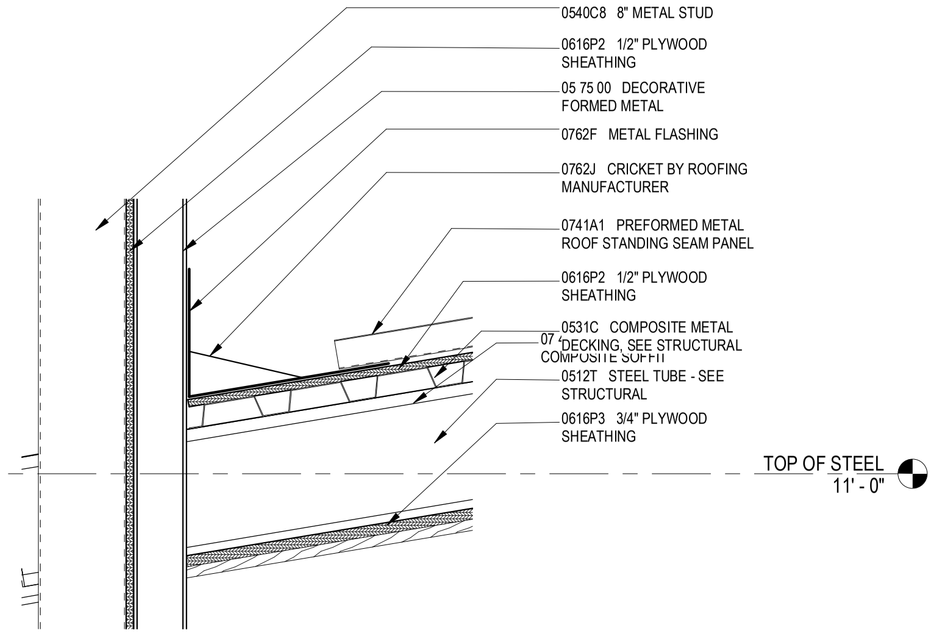

6 SA-300 **TYPICAL CANOPY VALLEY DETAIL**
SCALE: 1 1/2" = 1'-0" R.E. = 4/SA-202

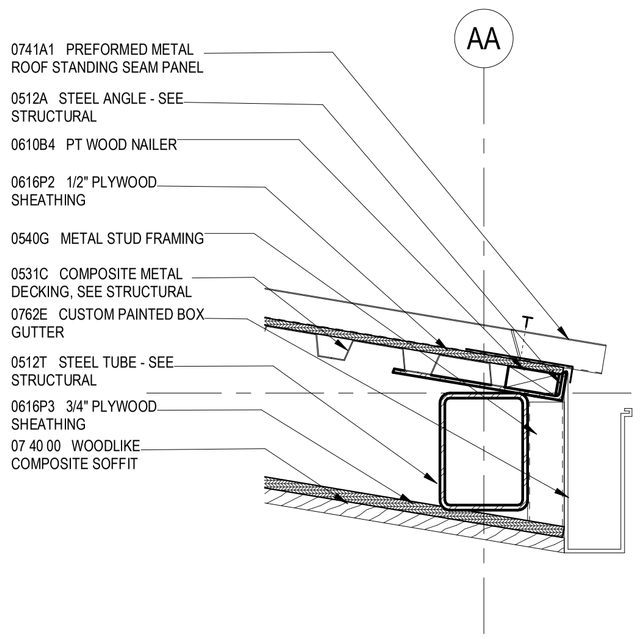

1 SA-300 **TYPICAL GUTTER DETAIL**
SCALE: 1 1/2" = 1'-0" R.E. = /

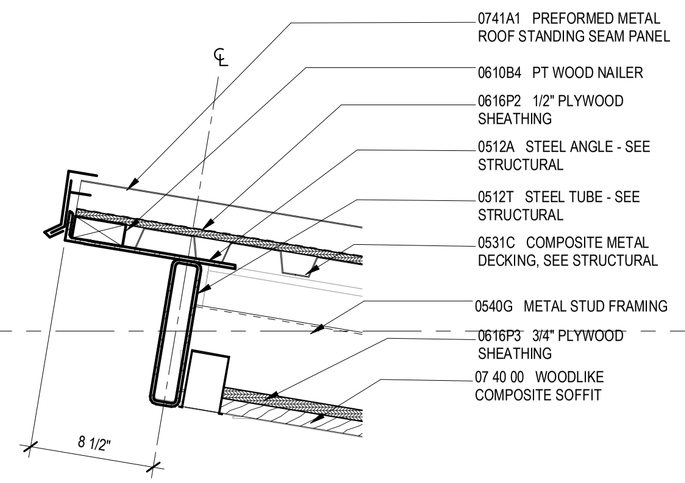

3 SA-300 **TYPICAL EDGE OF CANOPY DETAIL**
SCALE: 1 1/2" = 1'-0"

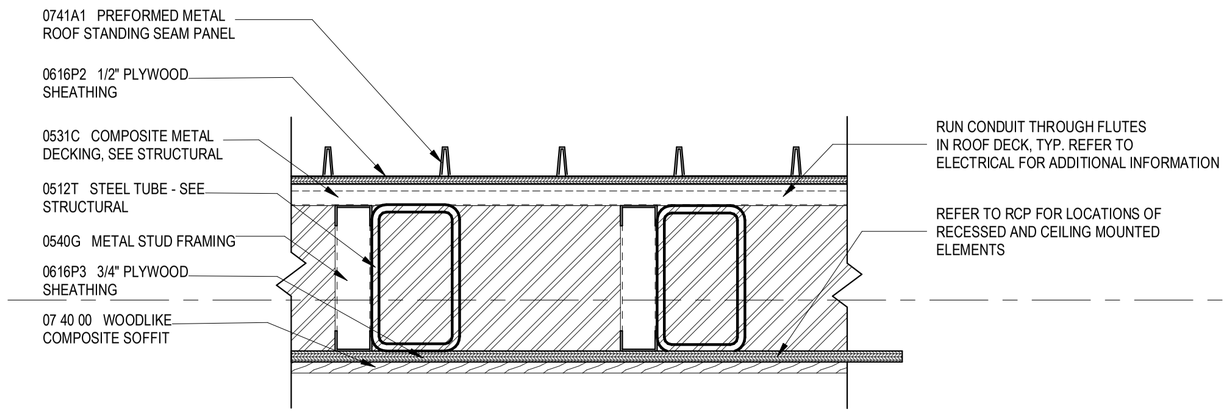

4 SA-300 **TYPICAL CANOPY ROOF ASSEMBLY (CR1)**
SCALE: 1 1/2" = 1'-0"

CITY OF RALEIGH
ENGINEERING SERVICES DEPARTMENT

DOCUMENT NOT CONSIDERED FINAL UNLESS ALL SIGNATURES COMPLETED

TYPICAL CANOPY DETAILS

PROJECT:
WAKE BRT
NEW BERN AVE

DATE:	1/28/2022
SHEET BY:	AMK
CHECKED BY:	LAV

REVISIONS

NO.	DATE

SCALES

SA-300

1/24/2022 3:28:40 PM
I:\BRT_RDO_Arch_Central.rvt

neighboring concepts
NEIGHBORING CONCEPTS, PLLC
1635 West Trade Street, Suite 1A
Charlotte, North Carolina 28216
NC Cert. No: 51098

INCOMPLETE PLANS
DO NOT USE FOR R/W ACQUISITION

KEYNOTE LEGEND

NUMBER	KEYNOTE
07 42 00	METAL WALL PANELS
0512T	STEEL TUBE - SEE STRUCTURAL
0540C	METAL STUD, REF STRUCTURAL
0540C6	6" METAL STUD
0616P2	1/2" PLYWOOD SHEATHING
1152A	RECESSED DIGITAL TOUCH DISPLAY SIGNAGE

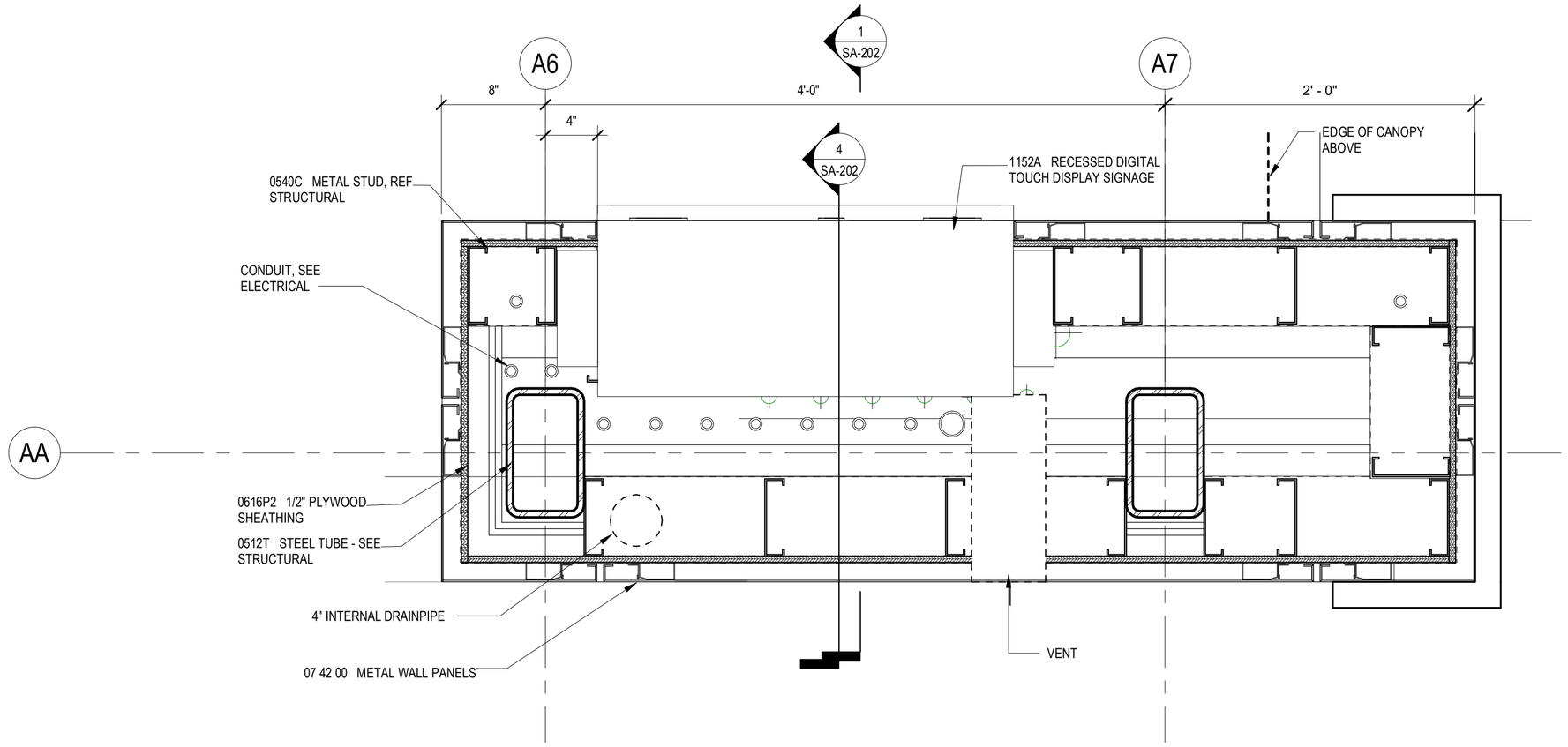

1 SA-301 **BE1 - DIGITAL SIGNAGE DETAIL**
SCALE: 1 1/2" = 1'-0" R.E. = 1/SA-200

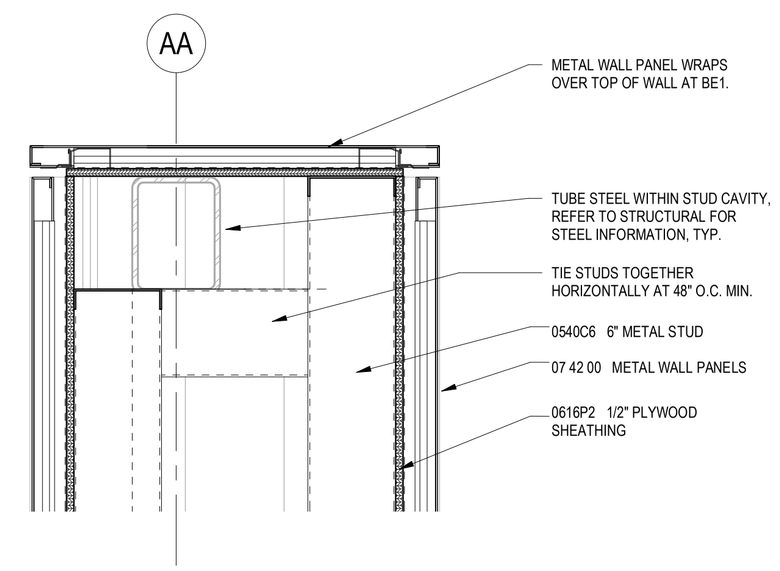

3 SA-301 **BE1 WALL CAP DETAIL**
SCALE: 1 1/2" = 1'-0"

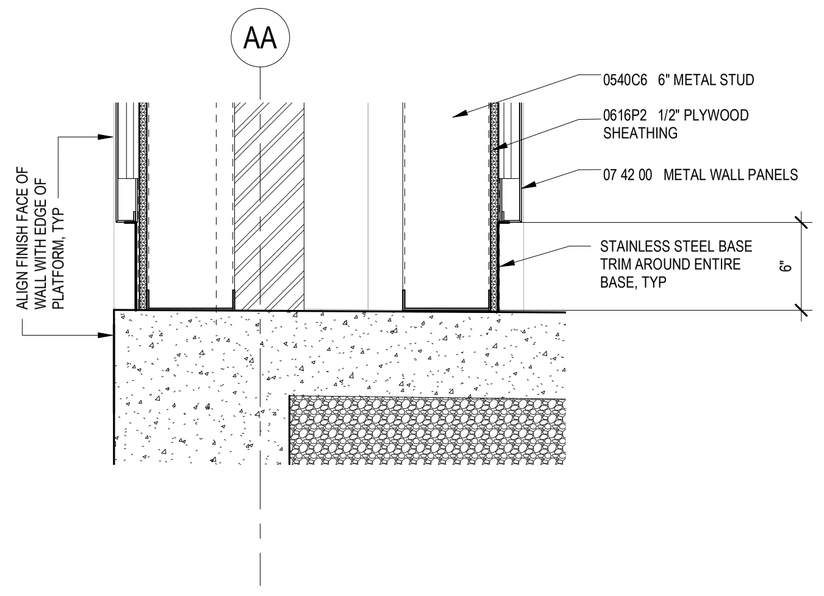

4 SA-301 **BE1 WALL BASE DETAIL**
SCALE: 1 1/2" = 1'-0"

CITY OF RALEIGH
ENGINEERING SERVICES DEPARTMENT

DOCUMENT NOT CONSIDERED FINAL UNLESS ALL SIGNATURES COMPLETED

TYPICAL FREESTANDING PARTITION DETAILS

PROJECT: WAKE BRT NEW BERN AVE

DATE:	1/28/2022
SHEET BY:	AMK
CHECKED BY:	LAV

REVISIONS

NO.	DATE

SCALES

SA-301

1/24/2022 3:28:43 PM
BIM 360://20-007 Wake BRT/20-007_Wake BRT_R20_Arch_Central.rvt

neighboring concepts
NEIGHBORING CONCEPTS, PLLC
1635 West Trade Street, Suite 1A
Charlotte, North Carolina 28216
NC Cert. No: 51098

INCOMPLETE PLANS
DO NOT USE FOR R/W ACQUISITION

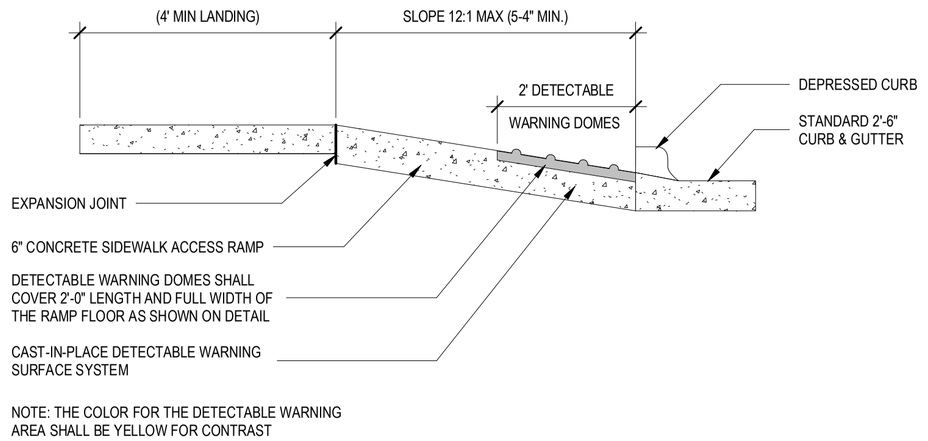

NOTE: THE COLOR FOR THE DETECTABLE WARNING
AREA SHALL BE YELLOW FOR CONTRAST

4 SA-302 DETECTABLE WARNING PAVER DETAIL AT SIDEWALKS

NOT TO SCALE

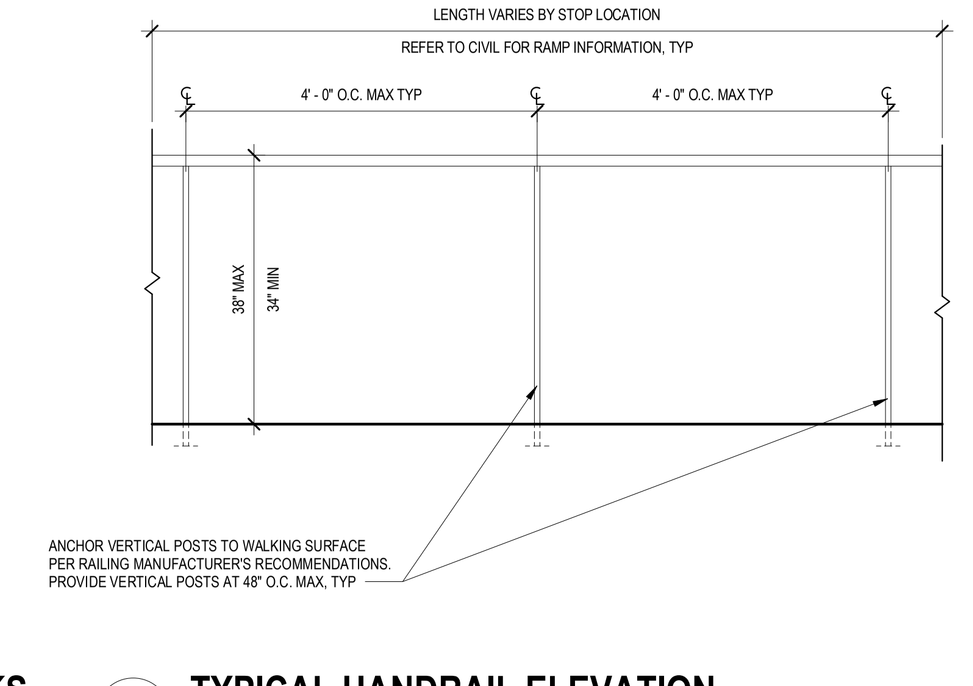

2 SA-302 TYPICAL HANDRAIL ELEVATION

SCALE: 3/4" = 1'-0"

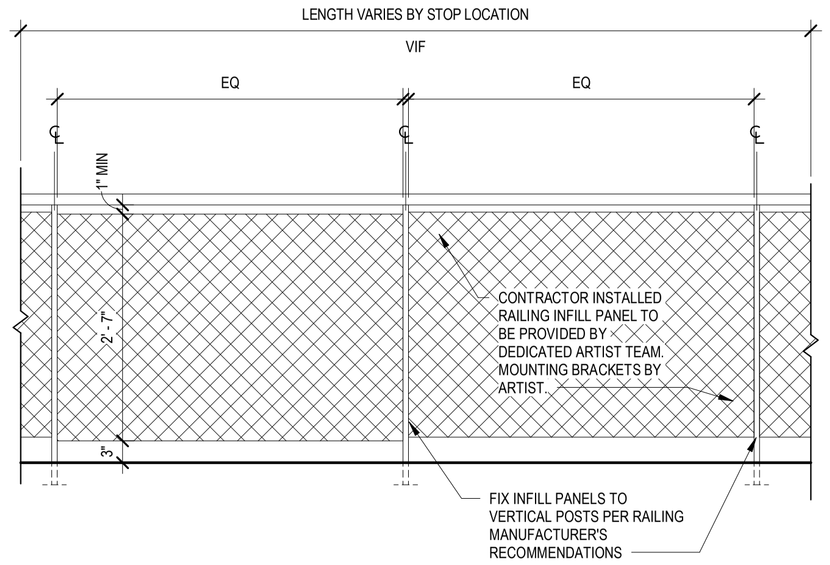

NOTE: PROVIDE INFILL PANELS WHERE NOTED ON STATION PROTOTYPE PLANS

3 SA-302 TYPICAL INFILL PANEL ELEVATION

SCALE: 3/4" = 1'-0"

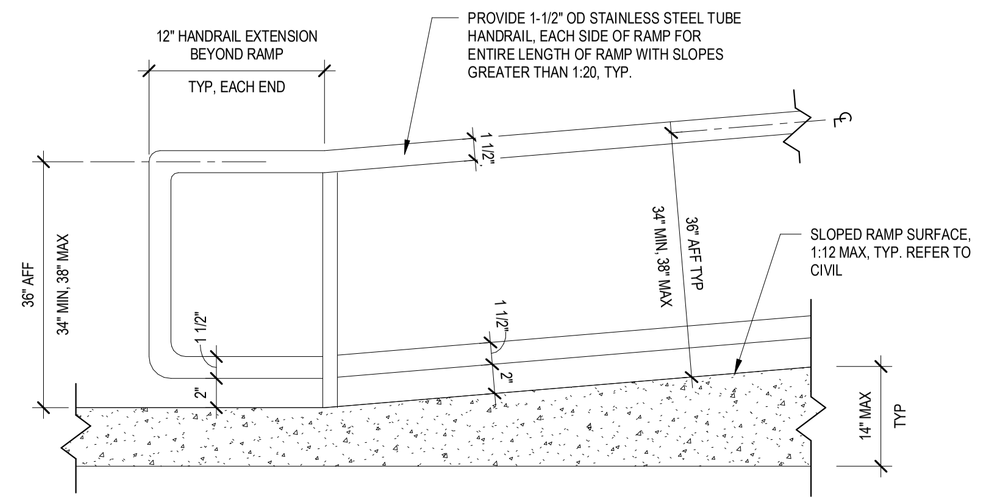

1 SA-302 TYPICAL RAMP SECTION AT HANDRAIL

NOT TO SCALE

CITY OF RALEIGH
ENGINEERING SERVICES
DEPARTMENT

DOCUMENT NOT CONSIDERED FINAL
UNLESS ALL SIGNATURES COMPLETED

TYPICAL RAILING
DETAILS

PROJECT:
WAKE BRT
NEW BERN AVE

DATE:	1/28/2022
SHEET BY:	AMK
CHECKED BY:	LAV

REVISIONS

NO.	DATE

SCALES

SA-302

1/24/2022 3:26:44 PM
I:\BRT_PROJ\2001 Wake BRT\2b\001_Wake BRT2b\001_Wake BRT_R2b_Arch_Central.rvt

neighboring concepts
NEIGHBORING CONCEPTS, PLLC
1635 West Trade Street, Suite 1A
Charlotte, North Carolina 28216
NC Cert. No: 51098

INCOMPLETE PLANS
DO NOT USE FOR R/W ACQUISITION

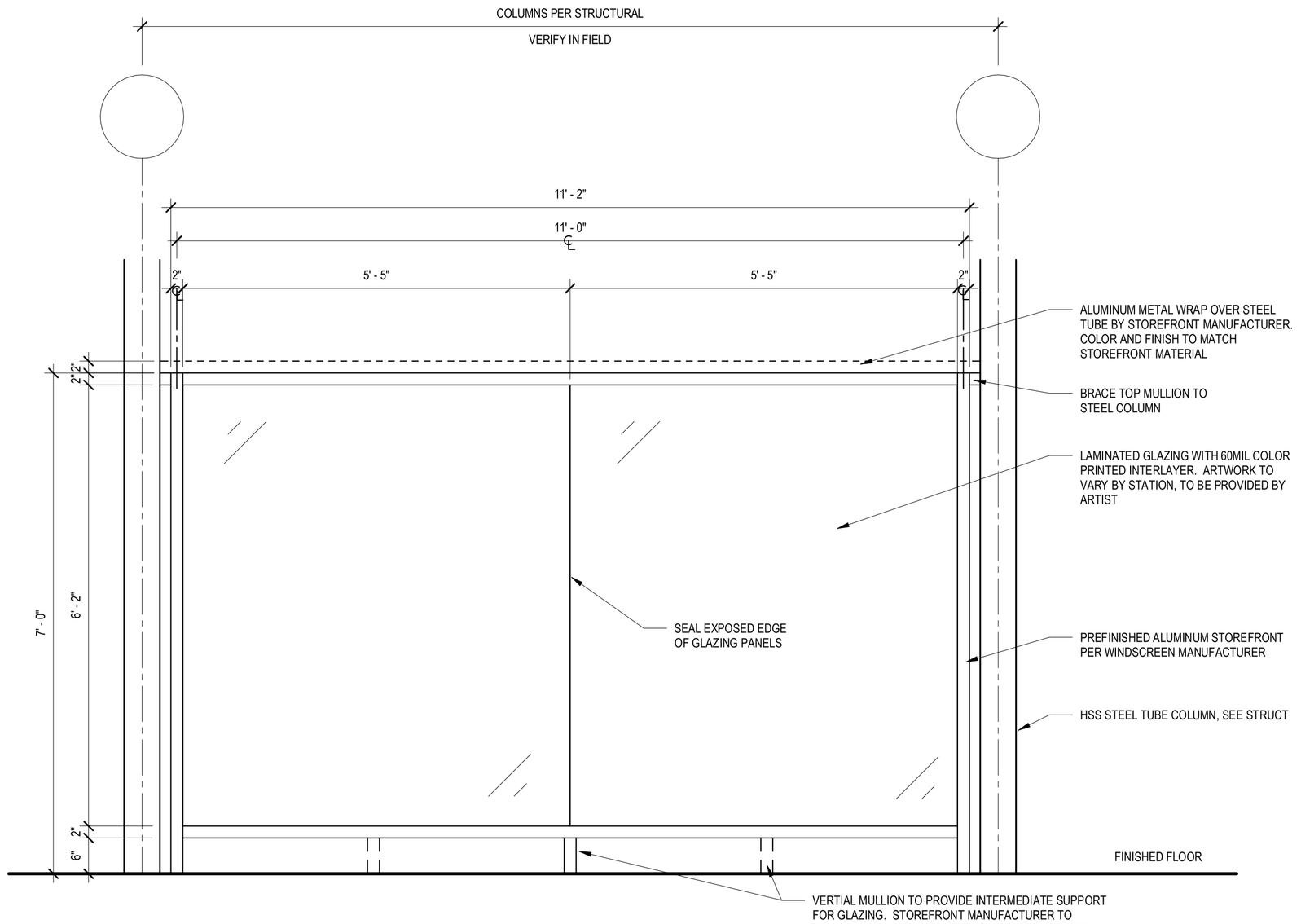

1 SA-303 **TYPICAL WINDSCREEN ELEVATION - TYPE A1**
SCALE: 3/4" = 1'-0"

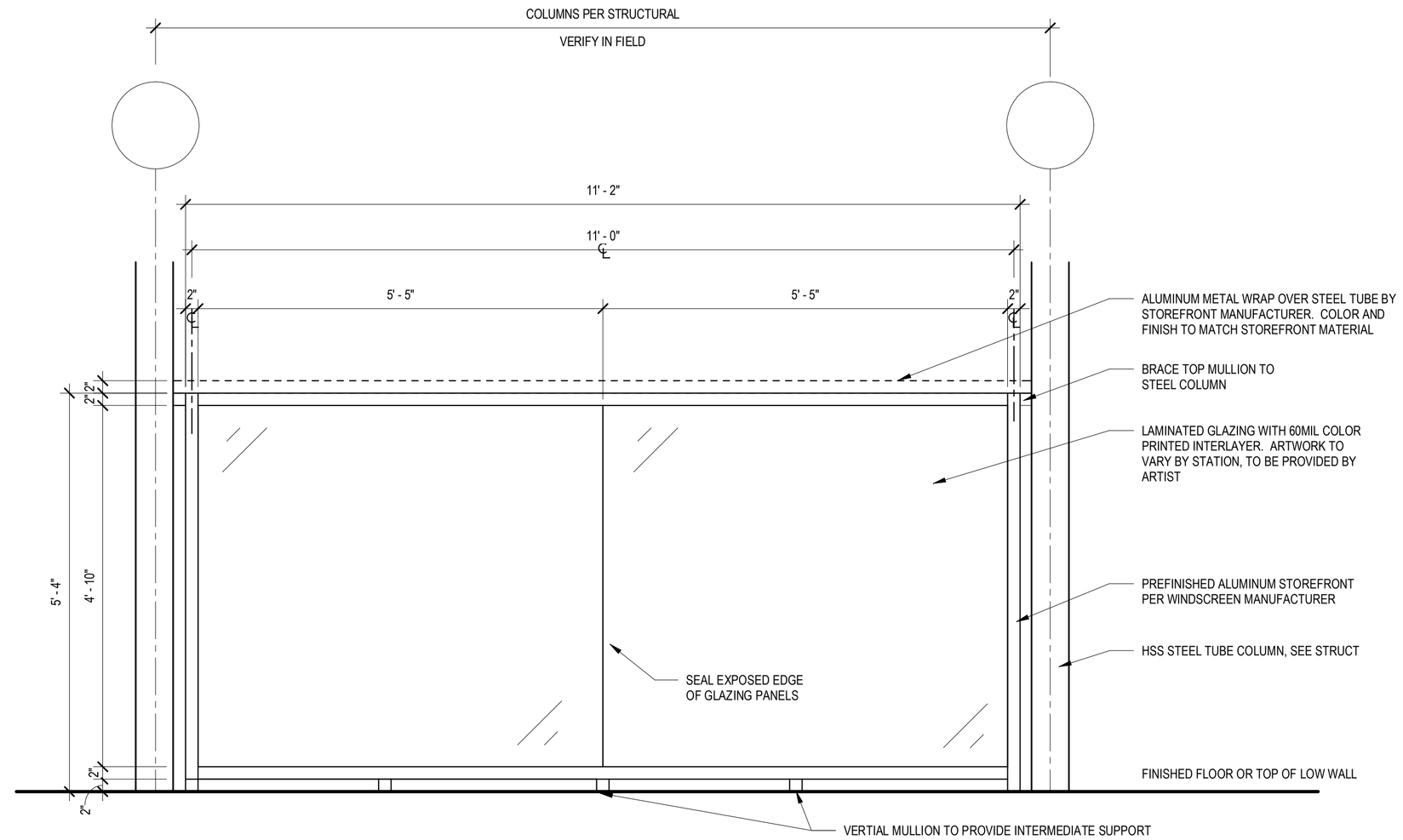

2 SA-303 **TYPICAL WINDSCREEN ELEVATION - TYPE B**
SCALE: 3/4" = 1'-0"

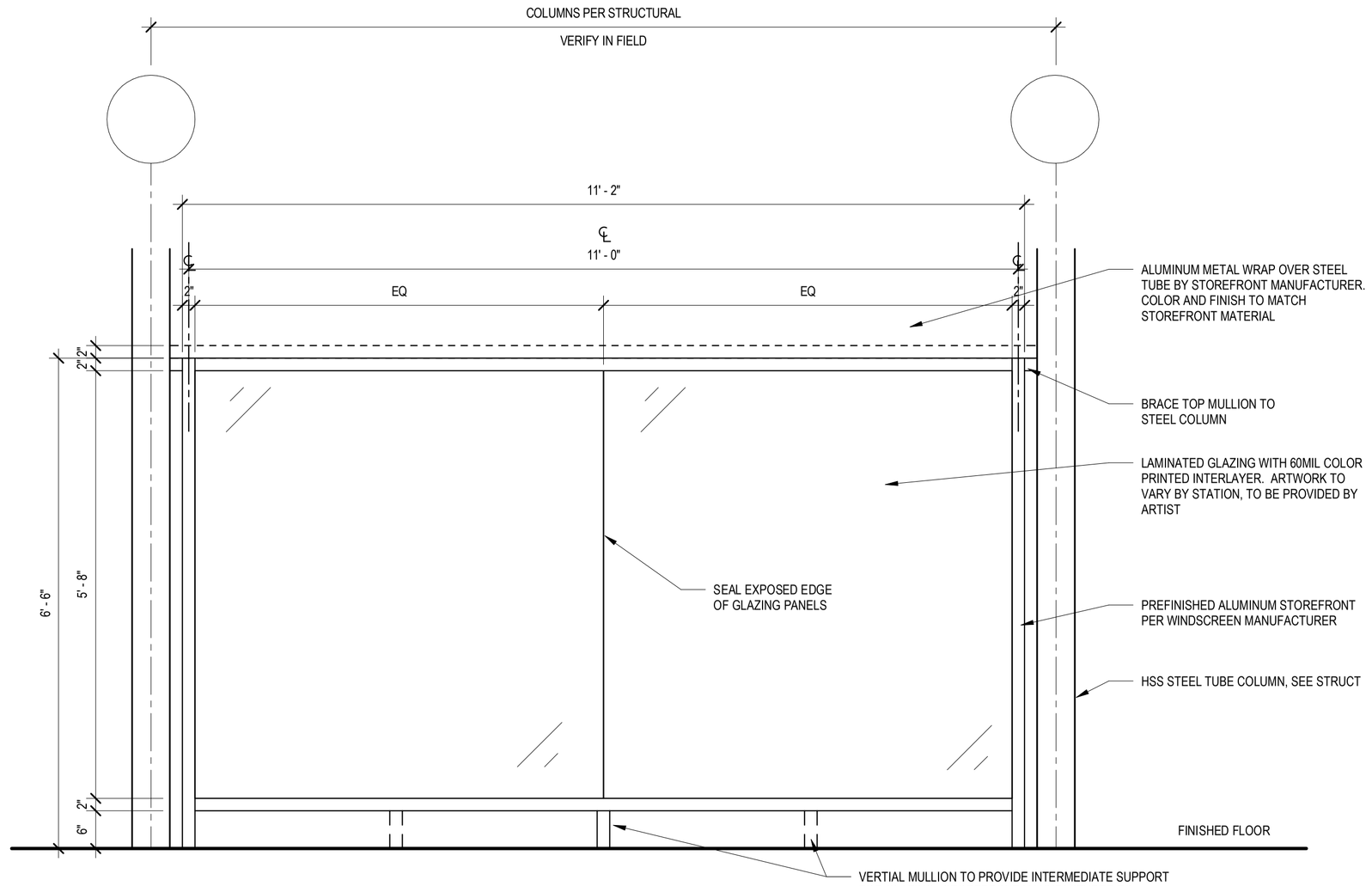

3 SA-303 **TYPICAL WINDSCREEN ELEVATION - TYPE A2**
SCALE: 3/4" = 1'-0"

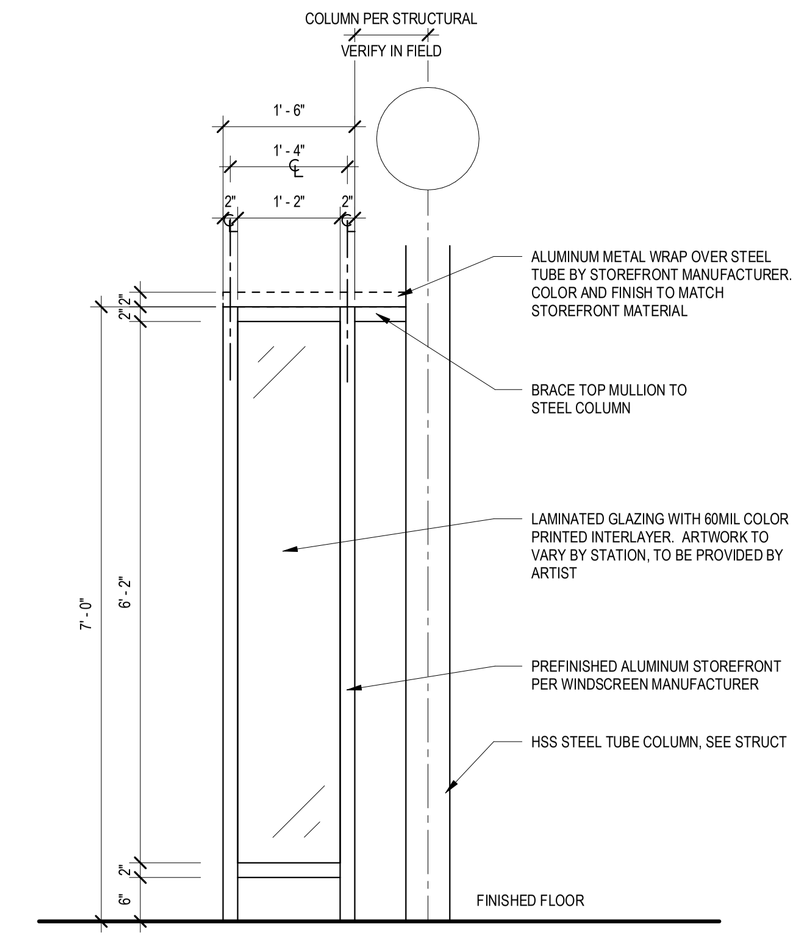

4 SA-303 **TYPICAL WINDSCREEN ELEVATION - TYPE C1**
SCALE: 3/4" = 1'-0"

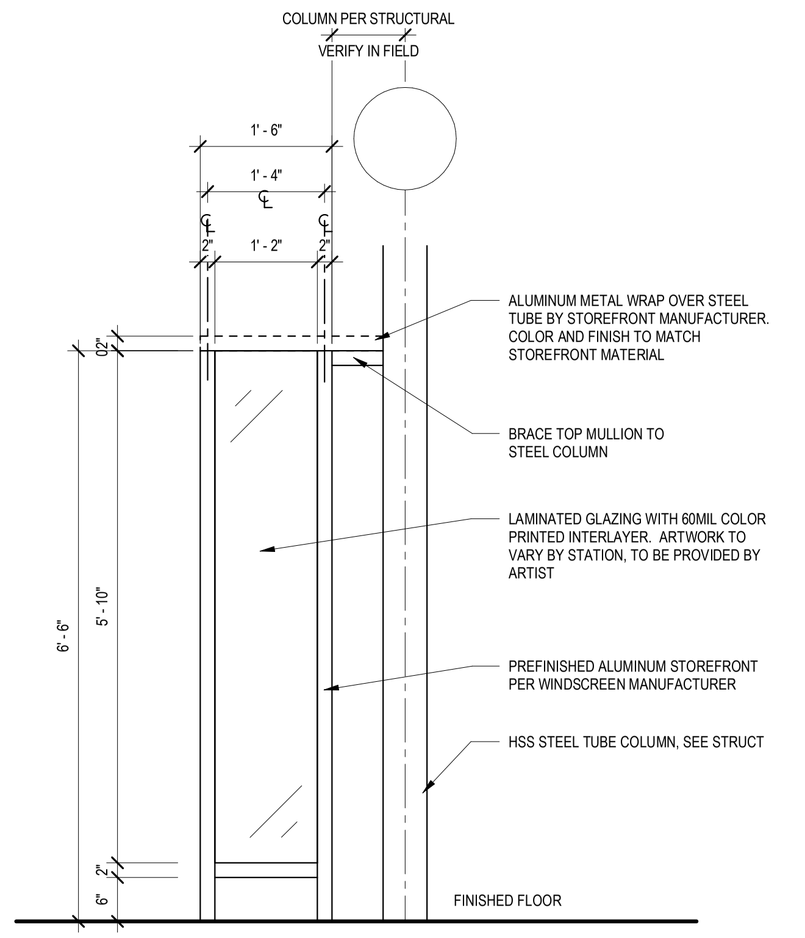

5 SA-303 **TYPICAL WINDSCREEN ELEVATION - TYPE C2**
SCALE: 3/4" = 1'-0"

CITY OF RALEIGH
ENGINEERING SERVICES DEPARTMENT

DOCUMENT NOT CONSIDERED FINAL UNLESS ALL SIGNATURES COMPLETED

TYPICAL WINDSCREEN ELEVATIONS

PROJECT:
WAKE BRT
NEW BERN AVE

DATE:	1/28/2022
SHEET BY:	AMK
CHECKED BY:	LAV

REVISIONS

NO.	DATE

SCALES

SA-303

1/24/2022 3:26:45 PM
I:\BRT 2800\2500\T Wake BRT\2500T_Wake BRT\2500T_Wake BRT_R00_Arch_Central.rvt

neighboring concepts
NEIGHBORING CONCEPTS, PLLC
1635 West Trade Street, Suite 1A
Charlotte, North Carolina 28216
NC Cert. No: 51098

INCOMPLETE PLANS
DO NOT USE FOR R/W ACQUISITION

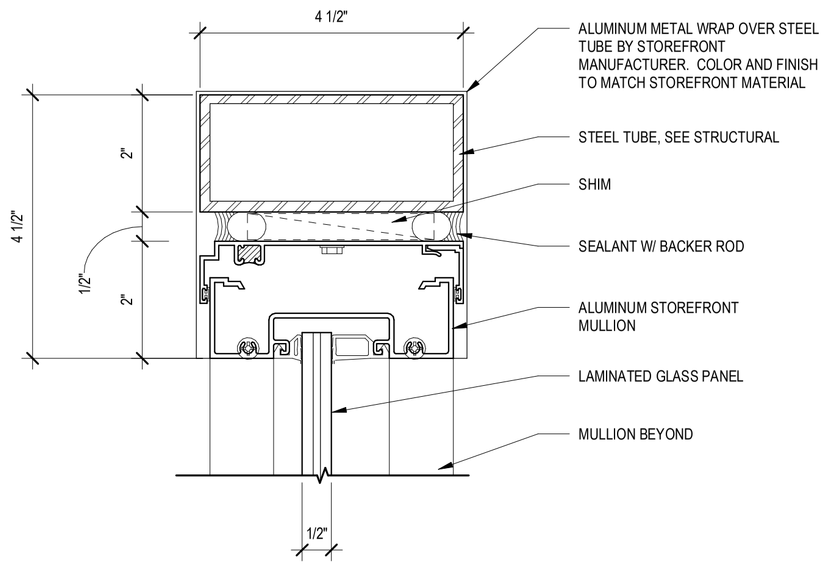

WINDSCREEN HORIZONTAL TOP MULLION SECTION DETAIL

1 / SA-304 SCALE: 6" = 1'-0"

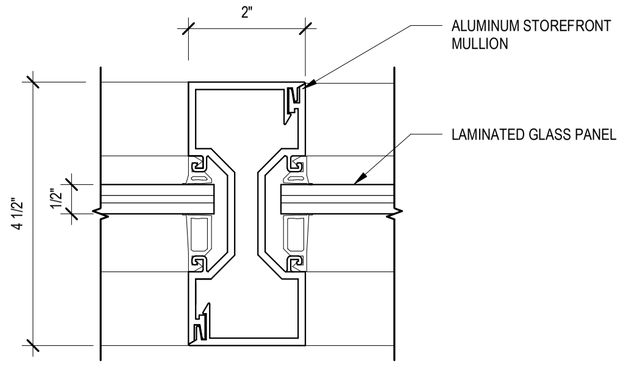

WINDSCREEN VERTICAL MULLION SECTION

2 / SA-304 SCALE: 6" = 1'-0"

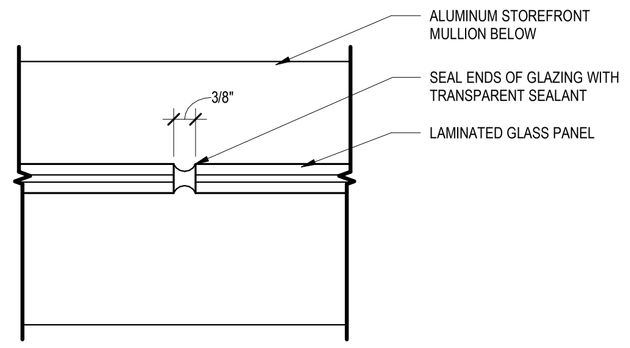

WINDSCREEN GLASS JOINT DETAIL

4 / SA-304 SCALE: 6" = 1'-0"

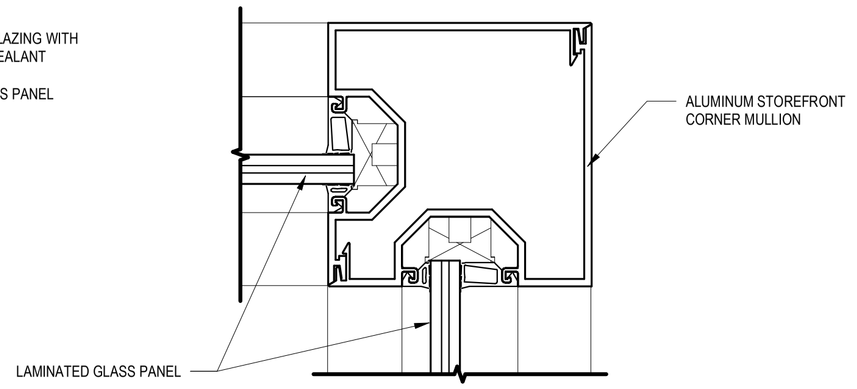

WINDSCREEN CORNER VERTICAL MULLION DETAIL

5 / SA-304 SCALE: 6" = 1'-0"

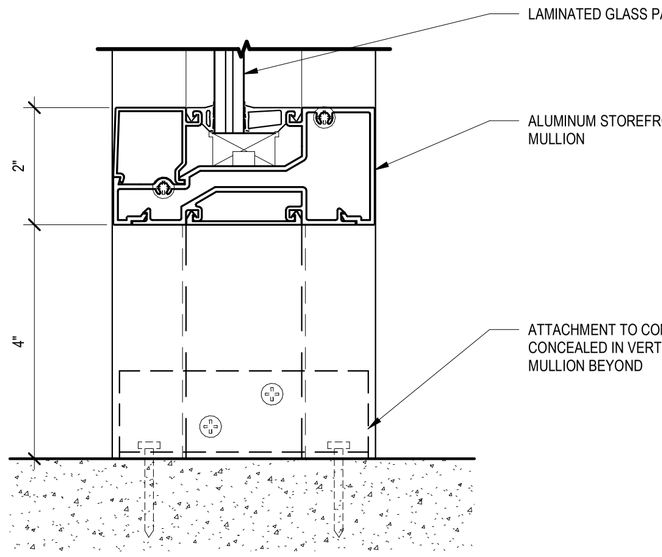

WINDSCREEN BOTTOM HORIZONTAL MULLION DETAIL

3 / SA-304 SCALE: 6" = 1'-0"

CITY OF RALEIGH
ENGINEERING SERVICES DEPARTMENT

DOCUMENT NOT CONSIDERED FINAL UNLESS ALL SIGNATURES COMPLETED

TYPICAL WINDSCREEN DETAILS

PROJECT: WAKE BRT NEW BERN AVE

DATE:	1/28/2022
SHEET BY:	Author
CHECKED BY:	Checker

REVISIONS

NO.	DATE

SCALES

SA-304

1/24/2022 3:26:46 PM
I:\RW_PROJ\2400\Wake BRT\2400_Wake BRT\Arch\007_Wake BRT_R00_Arch_Central.rvt

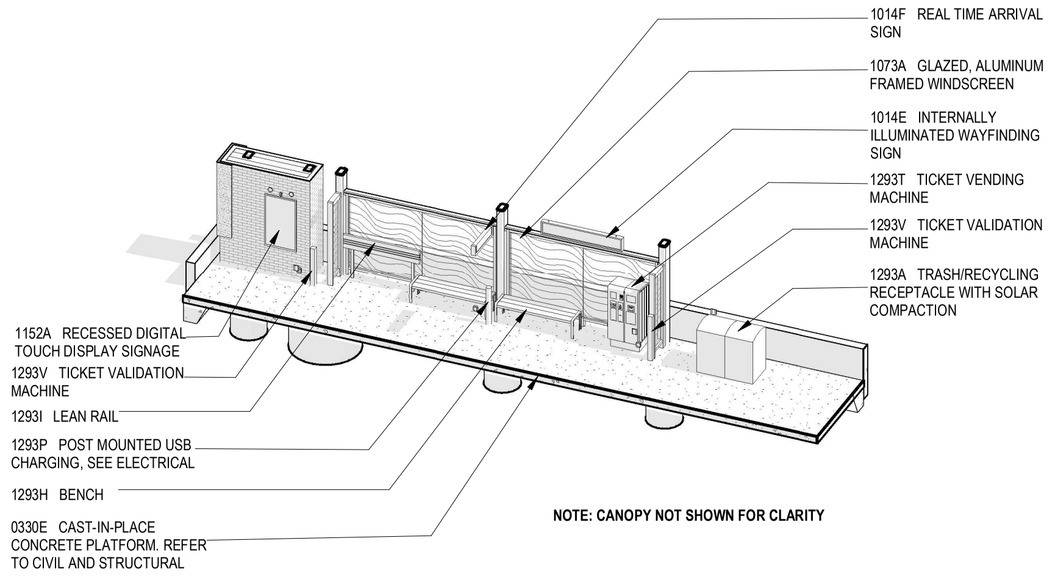

NOTE: CANOPY NOT SHOWN FOR CLARITY

5 SA-305 Typical Amenities - Peripheral

NOT TO SCALE

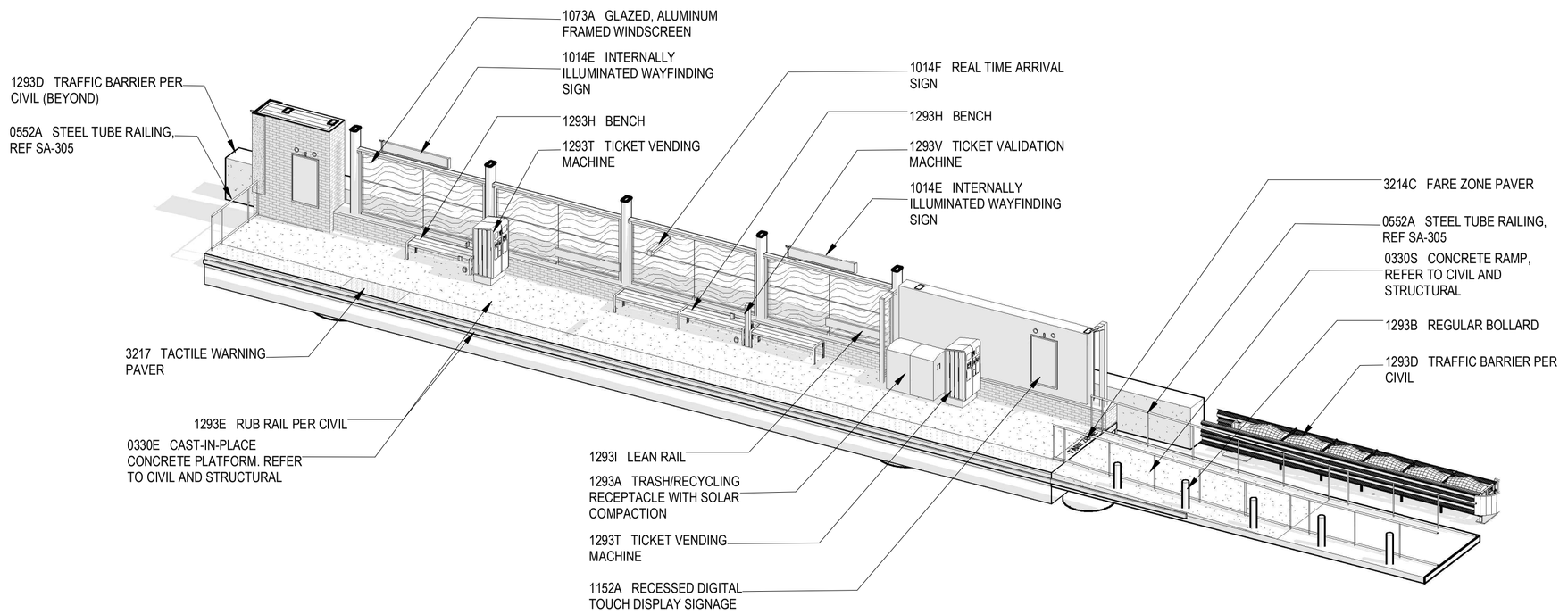

NOTE: CANOPY NOT SHOWN FOR CLARITY

4 SA-305 Typical Amenities - Split Island

NOT TO SCALE

KEYNOTE LEGEND	
NUMBER	KEYNOTE
0330E	CAST-IN-PLACE CONCRETE PLATFORM. REFER TO CIVIL AND STRUCTURAL
0330S	CONCRETE RAMP, REFER TO CIVIL AND STRUCTURAL
0552A	STEEL TUBE RAILING, REF SA-305
1014E	INTERNALLY ILLUMINATED WAYFINDING SIGN
1014F	REAL TIME ARRIVAL SIGN
1073A	GLAZED, ALUMINUM FRAMED WINDSCREEN
1152A	RECESSED DIGITAL TOUCH DISPLAY SIGNAGE
1293A	TRASH/RECYCLING RECEPTACLE WITH SOLAR COMPACTION
1293B	REGULAR BOLLARD
1293D	TRAFFIC BARRIER PER CIVIL
1293E	RUB RAIL PER CIVIL
1293H	BENCH
1293I	LEAN RAIL
1293P	POST MOUNTED USB CHARGING, SEE ELECTRICAL
1293T	TICKET VENDING MACHINE
1293V	TICKET VALIDATION MACHINE
3214C	FARE ZONE PAVER
3217	TACTILE WARNING PAVER

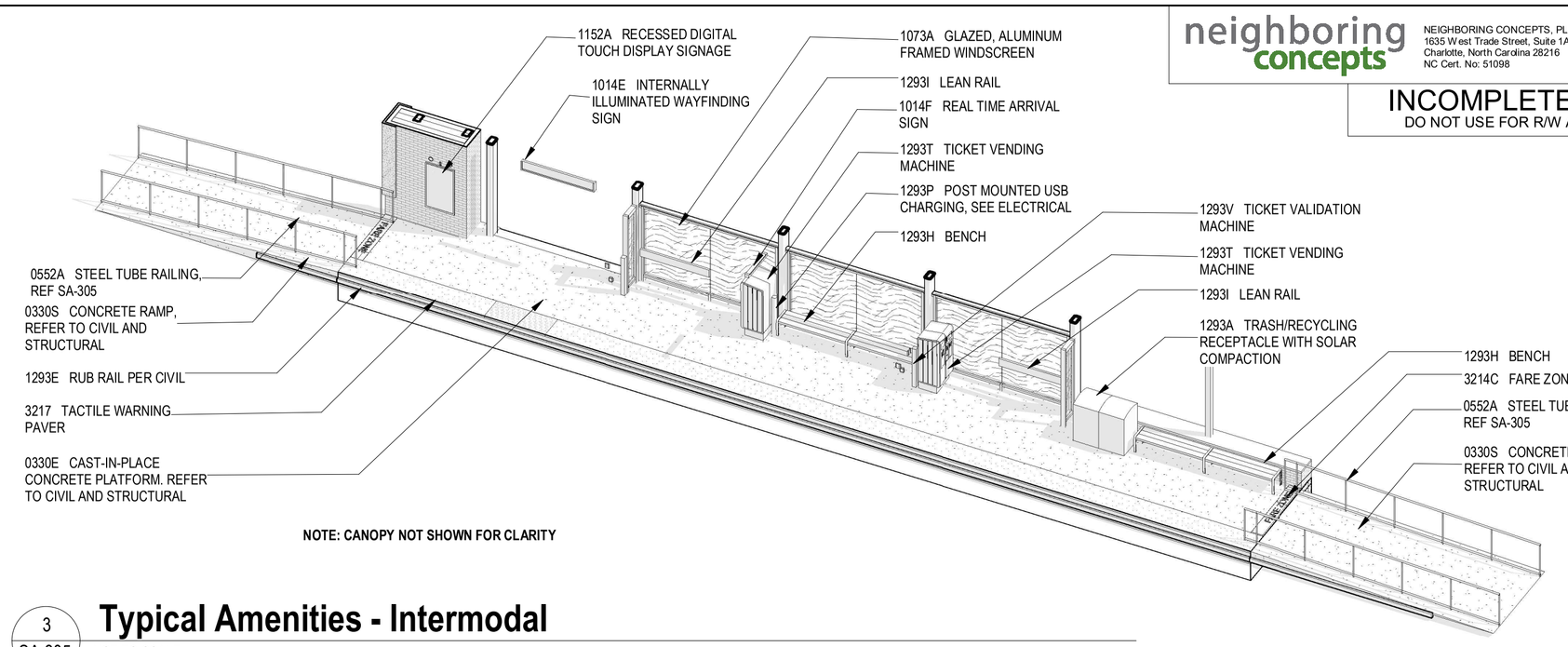

NOTE: CANOPY NOT SHOWN FOR CLARITY

3 SA-305 Typical Amenities - Intermodal

NOT TO SCALE

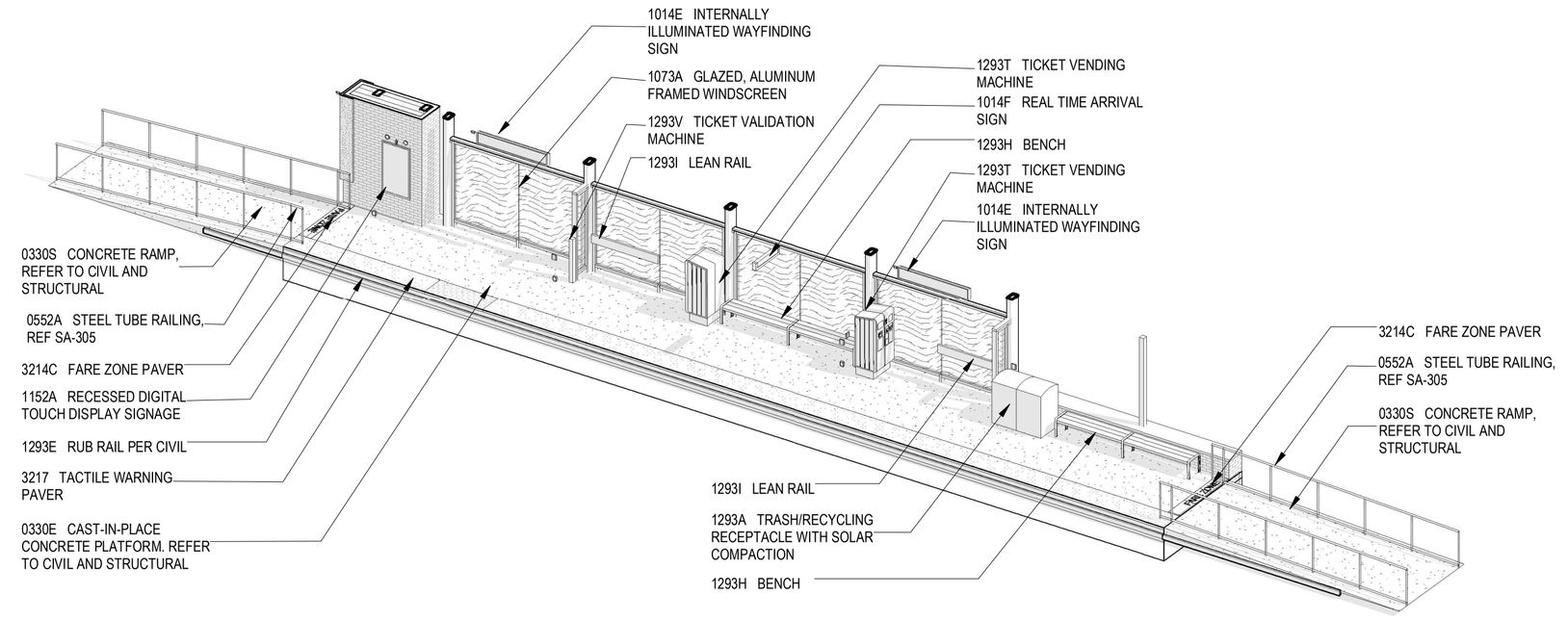

NOTE: CANOPY NOT SHOWN FOR CLARITY

2 SA-305 Typical Amenities - Suburban

NOT TO SCALE

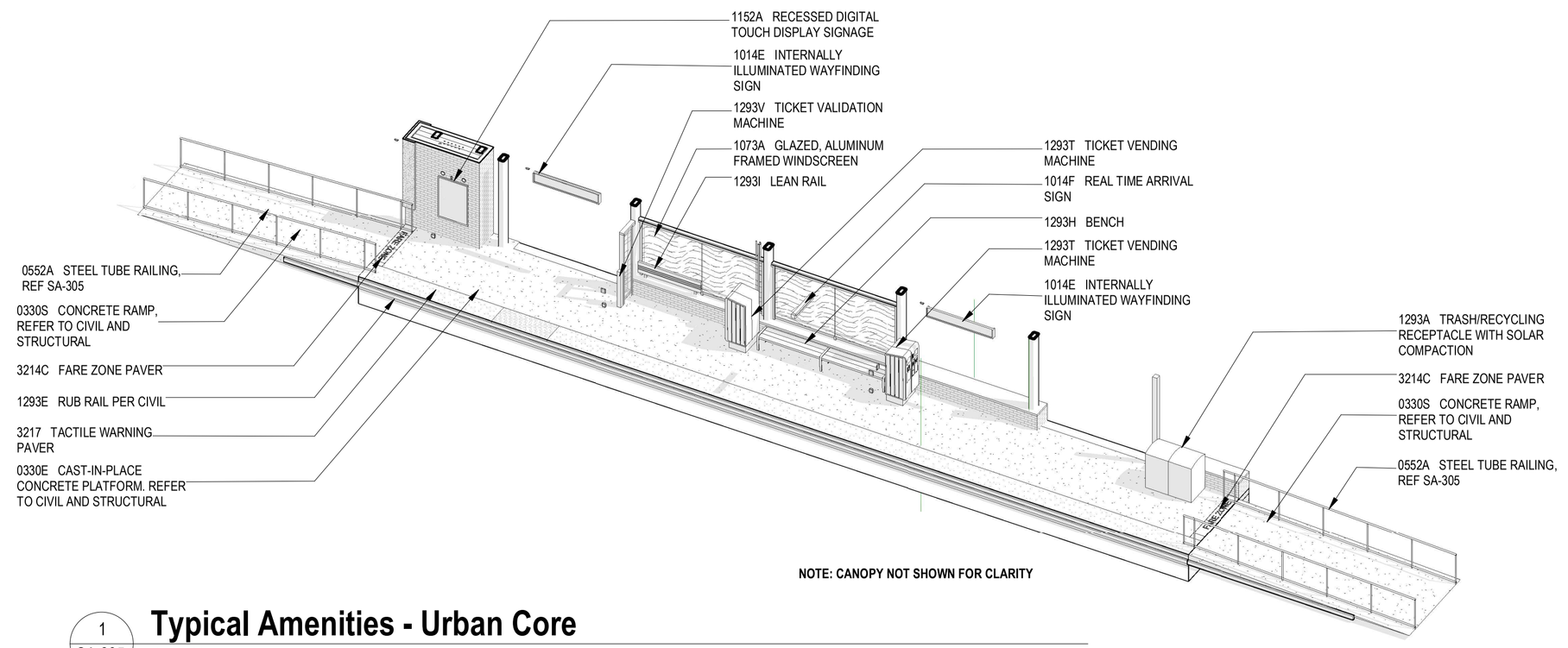

NOTE: CANOPY NOT SHOWN FOR CLARITY

1 SA-305 Typical Amenities - Urban Core

NOT TO SCALE

NOTE: DRAWING IS PROVIDED FOR REFERENCE ONLY. EQUIPMENT AND AMENITY LAYOUT IS SUBJECT TO CHANGE, AND MAY VARY BY STOP LOCATION, TYP.

neighboring concepts
NEIGHBORING CONCEPTS, PLLC
1635 West Trade Street, Suite 1A
Charlotte, North Carolina 28216
NC Cert. No: 51098

INCOMPLETE PLANS
DO NOT USE FOR R/W ACQUISITION

CITY OF RALEIGH
ENGINEERING SERVICES DEPARTMENT

DOCUMENT NOT CONSIDERED FINAL UNLESS ALL SIGNATURES COMPLETED

TYPICAL PLATFORM LAYOUTS - FOR REFERENCE ONLY

PROJECT:
WAKE BRT
NEW BERN AVE

DATE:	1/28/2022
SHEET BY:	AMK
CHECKED BY:	LAV

REVISIONS

NO.	DATE

SCALES

SA-305

1/24/2022 3:29:07 PM
I:\BRT-BRT-PROJ\01 Wake BRT\05-ROW\01_Wake BRT_ROW_Arch_Central.rvt

neighboring concepts
NEIGHBORING CONCEPTS, PLLC
1635 West Trade Street, Suite 1A
Charlotte, North Carolina 28216
NC Cert. No: 51098

INCOMPLETE PLANS
DO NOT USE FOR R/W ACQUISITION

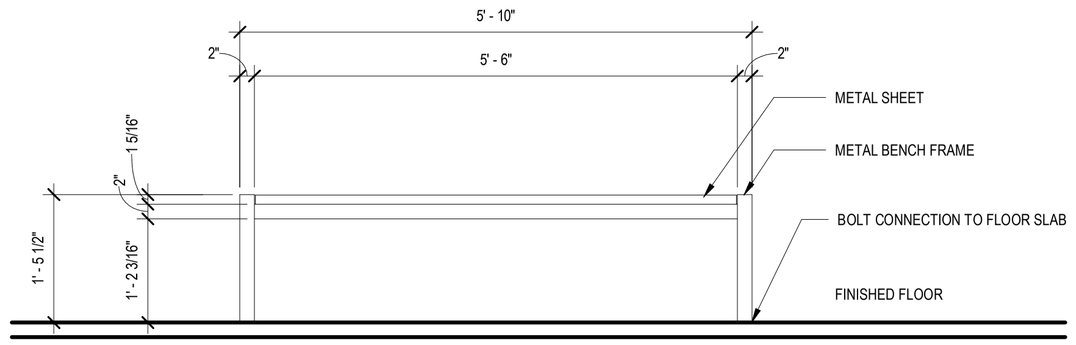

1 SA-306 **TYPICAL BENCH ELEVATION**
SCALE: 3/4" = 1'-0" R.E. = /

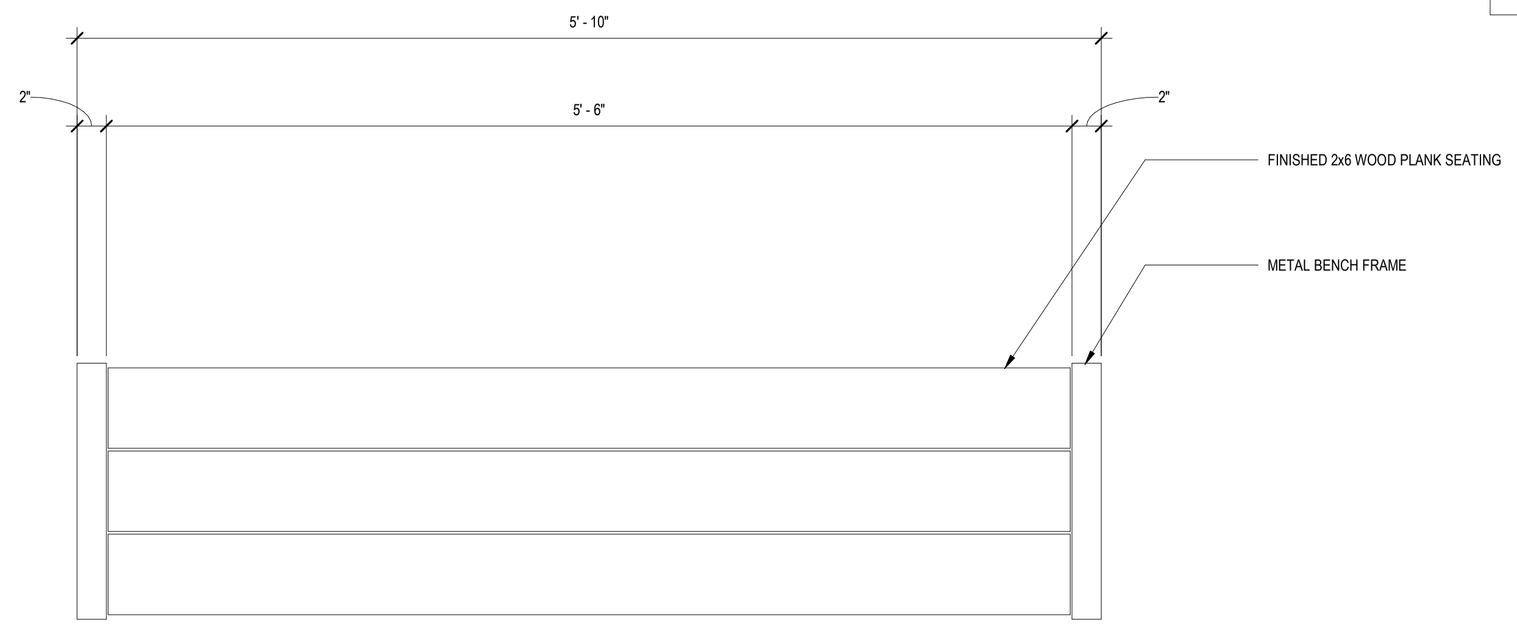

2 SA-306 **TYPICAL BENCH PLAN**
SCALE: 1 1/2" = 1'-0" R.E. = /

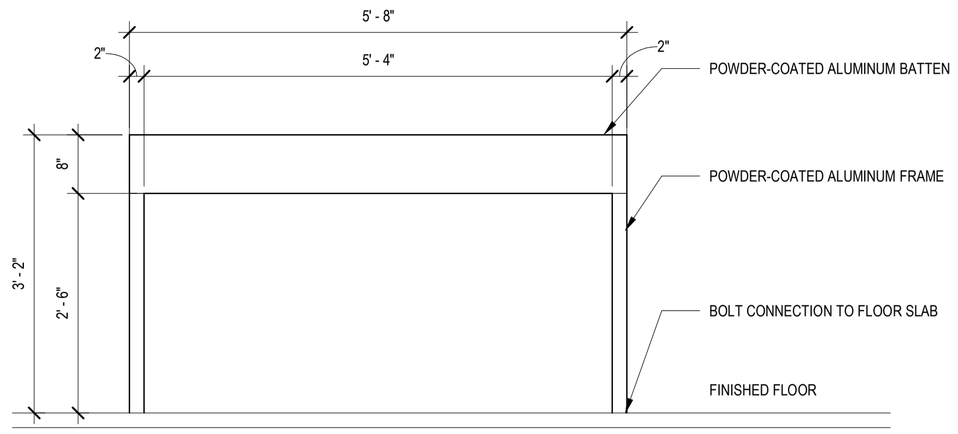

3 SA-306 **TYPICAL LEAN RAIL ELEVATION**
SCALE: 3/4" = 1'-0" R.E. = /

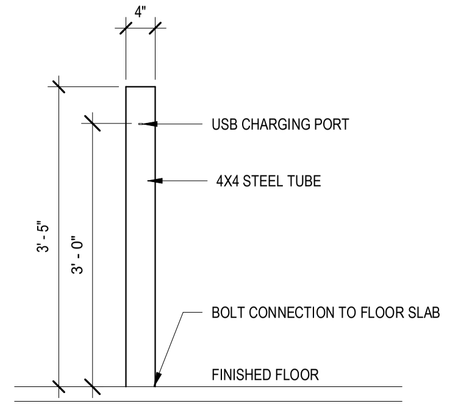

4 SA-306 **TYPICAL USB POST ELEVATION**
SCALE: 3/4" = 1'-0" R.E. = /

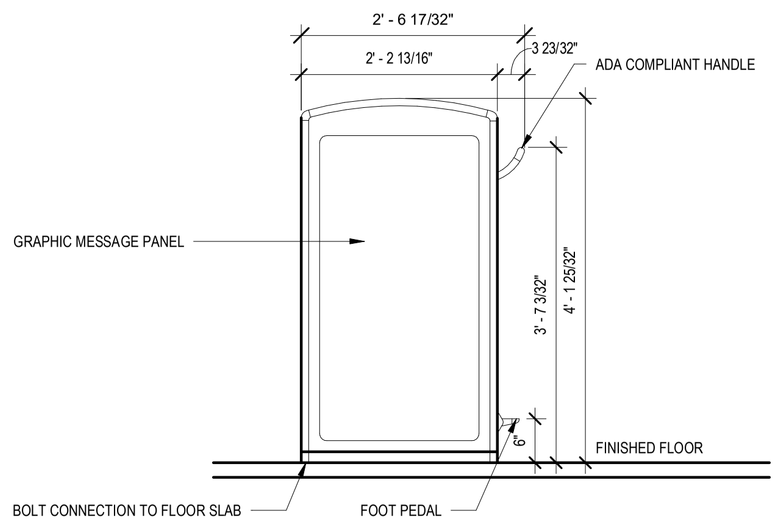

5 SA-306 **TYPICAL TRASH BIN SIDE ELEVATION**
SCALE: 3/4" = 1'-0" R.E. = /

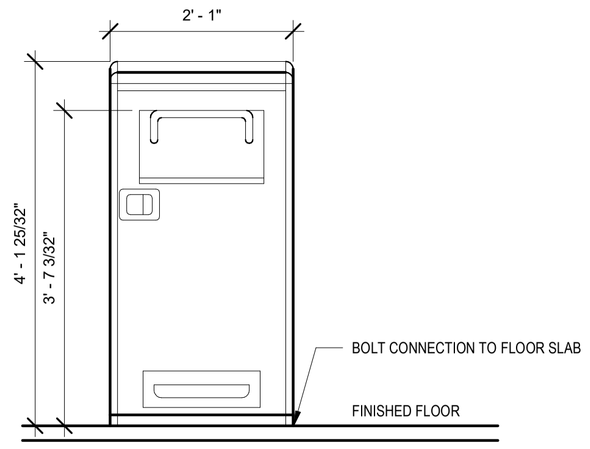

6 SA-306 **TYPICAL TRASH BIN FRONT ELEVATION**
SCALE: 3/4" = 1'-0" R.E. = /

CITY OF RALEIGH
ENGINEERING SERVICES DEPARTMENT

DOCUMENT NOT CONSIDERED FINAL UNLESS ALL SIGNATURES COMPLETED

STATION AMENITY DETAILS

PROJECT: WAKE BRT NEW BERN AVE

DATE:	1/28/2022
SHEET BY:	Author
CHECKED BY:	Checker

REVISIONS

NO.	DATE

SCALES

SA-306

1/24/2022 3:20:01 PM
BIM 360://20-007 Wake BRT/20-007_Wake BRT_R20_Arch_Central.rvt

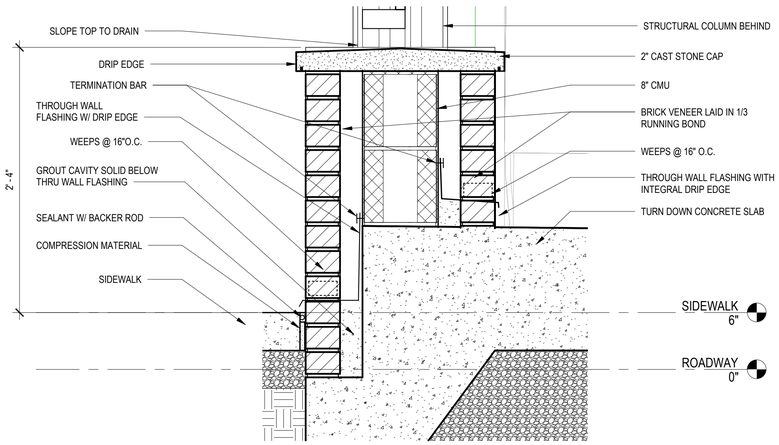

1
SA-307

TYPICAL LOW WALL SECTION

SCALE: 1 1/2" = 1'-0" R.E. = 2 / SA-202

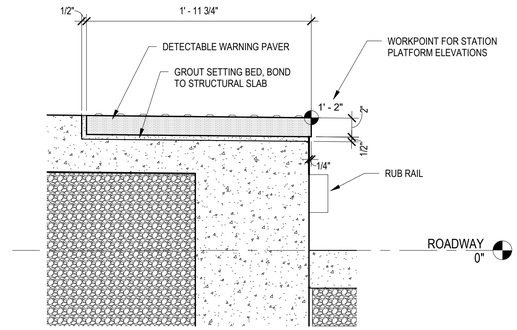

2
SA-307

PLATFORM EDGE DETAIL

SCALE: 1 1/2" = 1'-0" R.E. = 1 / SA-202

neighboring concepts
NEIGHBORING CONCEPTS, PLLC
1635 West Trade Street, Suite 1A
Charlotte, North Carolina 28216
NC Cert. No: 51098

INCOMPLETE PLANS
DO NOT USE FOR R/W ACQUISITION

CITY OF RALEIGH
ENGINEERING SERVICES DEPARTMENT

DOCUMENT NOT CONSIDERED FINAL UNLESS ALL SIGNATURES COMPLETED

TYPICAL PLATFORM DETAILS

PROJECT:
WAKE BRT
NEW BERN AVE

DATE:	1/28/2022
SHEET BY:	Author
CHECKED BY:	Checker

REVISIONS

NO.	DATE

SCALES

SA-307

1/31/2022 3:07:58 PM
BIM 360://20-007 Wake BRT/20-007_Wake BRT_R20_Arch_Central.rvt

neighboring concepts
NEIGHBORING CONCEPTS, PLLC
1635 West Trade Street, Suite 1A
Charlotte, North Carolina 28216
NC Cert. No: 51098

INCOMPLETE PLANS
DO NOT USE FOR R/W ACQUISITION

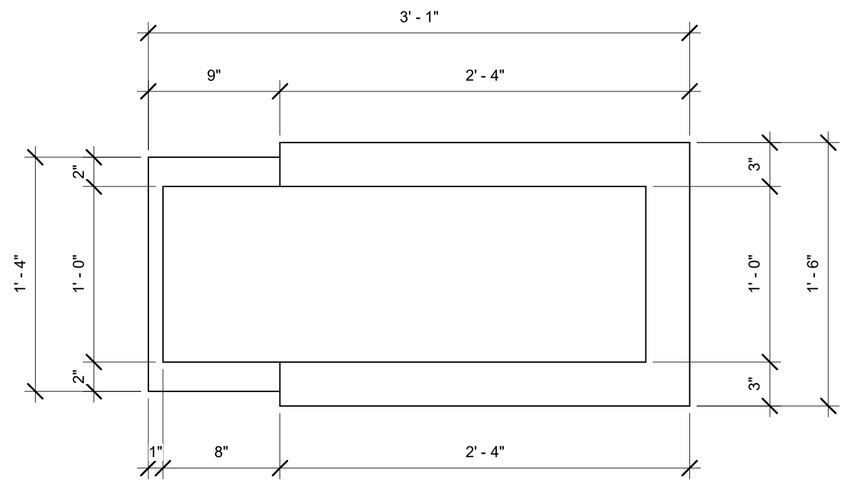

1 SA-400 **PYLON ELEMENT TOP PLAN**
SCALE: 1 1/2" = 1'-0" R.E. = /

2 SA-400 **PYLON ELEMENT FRONT ELEVATION**
SCALE: 3/4" = 1'-0" R.E. = /

3 SA-400 **PYLON ELEMENT REAR ELEVATION**
SCALE: 3/4" = 1'-0" R.E. = /

4 SA-400 **PYLON ELEMENT SIDE ELEVATION 1**
SCALE: 3/4" = 1'-0" R.E. = /

5 SA-400 **PYLON ELEMENT SIDE ELEVATION 2**
SCALE: 3/4" = 1'-0" R.E. = /

CITY OF RALEIGH
ENGINEERING SERVICES DEPARTMENT

DOCUMENT NOT CONSIDERED FINAL UNLESS ALL SIGNATURES COMPLETED

PYLON ELEMENT

PROJECT:
WAKE BRT
NEW BERN AVE

DATE:	1/28/2022
SHEET BY:	Author
CHECKED BY:	Checker

REVISIONS

NO.	DATE

SCALES

SA-400

1/24/2022 3:23:04 PM
M:\Wake BRT\Drawings\Wake BRT\Drawings\SA_Wake BRT_SIGN_Arch_Central.rvt

neighboring concepts
NEIGHBORING CONCEPTS, PLLC
1635 West Trade Street, Suite 1A
Charlotte, North Carolina 28216
NC Cert. No: 51098

INCOMPLETE PLANS
DO NOT USE FOR R/W ACQUISITION

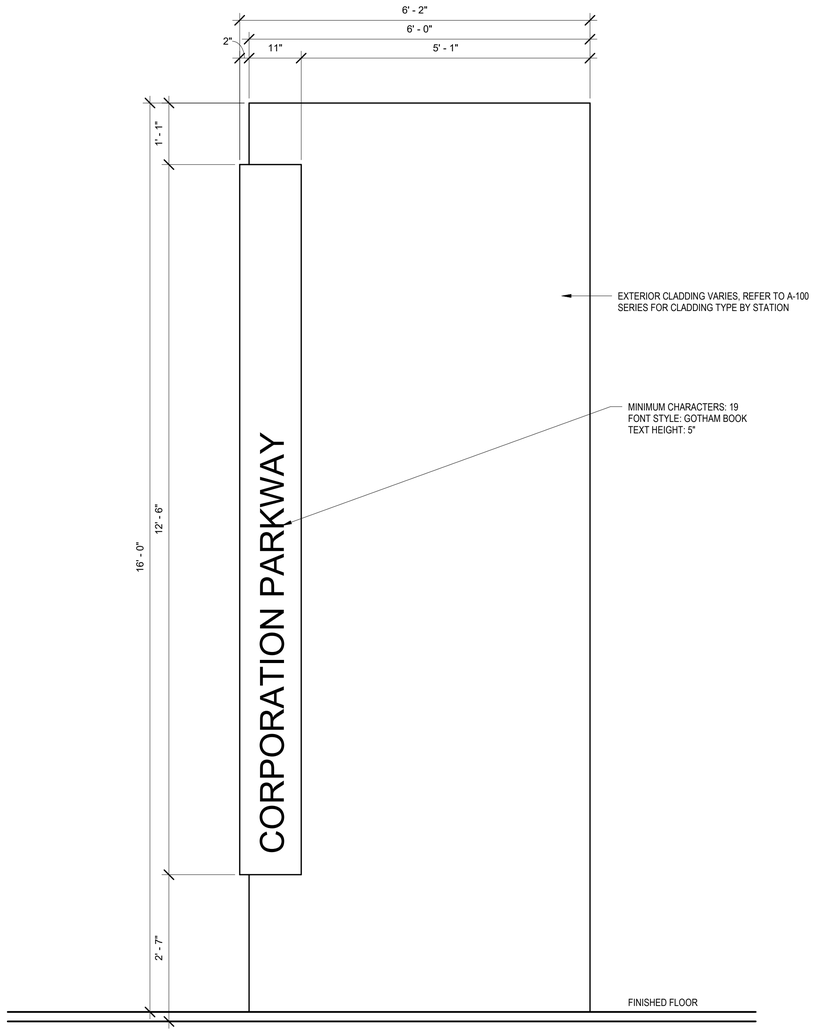

6 SA-500 **BOLD ELEMENT SIGNAGE ELEVATION**
SCALE: 3/4" = 1'-0" R.E. = /

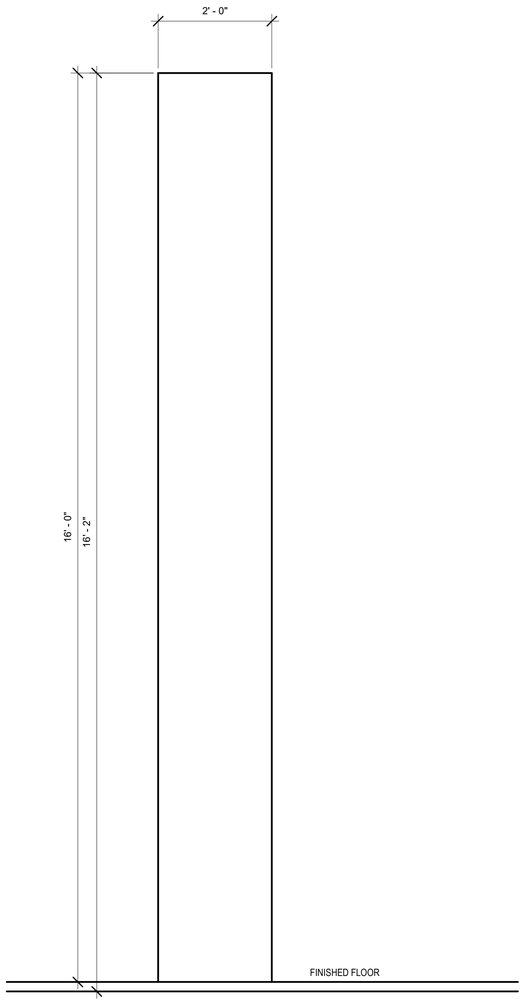

5 SA-500 **BOLD ELEMENT SIGNAGE SECTION**
SCALE: 3/4" = 1'-0" R.E. = /

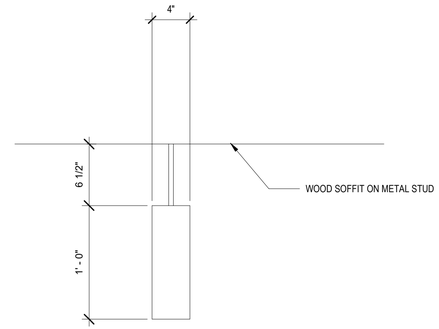

3 SA-500 **WAYFINDING SIGN SECTION**
SCALE: 1 1/2" = 1'-0" R.E. = /

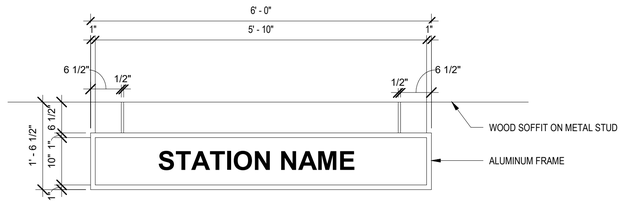

1 SA-500 **WAYFINDING SIGN FRONT ELEVATION**
SCALE: 3/4" = 1'-0" R.E. = /

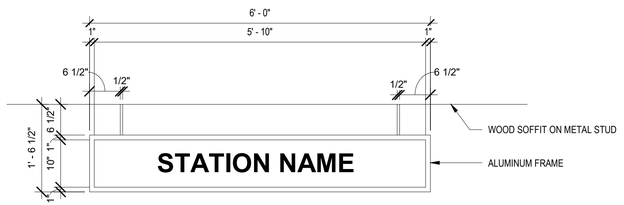

2 SA-500 **WAYFINDING SIGN REAR ELEVATION**
SCALE: 3/4" = 1'-0" R.E. = /

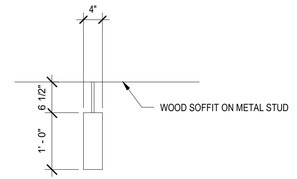

4 SA-500 **WAYFINDING SIGN SIDE ELEVATION**
SCALE: 3/4" = 1'-0" R.E. = /

CITY OF RALEIGH
ENGINEERING SERVICES DEPARTMENT

DOCUMENT NOT CONSIDERED FINAL UNLESS ALL SIGNATURES COMPLETED

SIGNAGE

PROJECT: WAKE BRT NEW BERN AVE

DATE:	1/28/2022
SHEET BY:	Author
CHECKED BY:	Checker

REVISIONS

NO.	DATE

SCALES

SA-500

1/24/2022 3:57:46 PM
BIM 360://20-007 Wake BRT/20-007_Wake BRT_R20_Arch_Central.rvt